SECTION TM
TRANSAXLE & TRANSMISSION

CONTENTS

6MT: FS6R31A

SYSTEM DESCRIPTION 7

M/T SYSTEM 7
System Diagram 7
System Description 7

DTC/CIRCUIT DIAGNOSIS 9

BACK-UP LAMP SWITCH 9
Component Parts Location 9
Component Inspection 9

PARK/NEUTRAL POSITION SWITCH 10
Component Parts Location 10
Component Inspection 10

SYMPTOM DIAGNOSIS 11

NOISE, VIBRATION AND HARSHNESS (NVH) TROUBLESHOOTING 11
NVH Troubleshooting Chart 11

PRECAUTION 12

PRECAUTIONS 12
Precaution for Supplemental Restraint System (SRS) "AIR BAG" and "SEAT BELT PRE-TENSIONER" 12
Precautions Necessary for Steering Wheel Rotation After Battery Disconnection 12
Precaution for Procedure without Cowl Top Cover 13
Service Notice or Precautions for Manual Transmission 13

PREPARATION 14

PREPARATION 14
Special Service Tools 14
Commercial Service Tools 16

PERIODIC MAINTENANCE 18

GEAR OIL 18
Inspection 18
Draining 18
Refilling 18

REMOVAL AND INSTALLATION 19

REAR OIL SEAL 19
Removal and Installation 19
Inspection 19

SHIFT CONTROL 20
Exploded View 20
Removal and Installation 20
Inspection 25

AIR BREATHER HOSE 26
Exploded View 26
Removal and Installation 26

UNIT REMOVAL AND INSTALLATION 28

TRANSMISSION ASSEMBLY 28
Exploded View 28
Removal and Installation 28
Inspection 31

UNIT DISASSEMBLY AND ASSEMBLY 32

TRANSMISSION ASSEMBLY 32
Exploded View 32
Disassembly 38
Assembly 46
Inspection 63

MAIN DRIVE GEAR 65
Exploded View 65
Disassembly 66
Assembly 66
Inspection 67

MAINSHAFT AND GEAR 69
Exploded View 69

Disassembly 70
Assembly 71
Inspection 77

COUNTER SHAFT AND GEAR 80
Exploded View 80
Disassembly 80
Assembly 81
Inspection 84

REVERSE IDLER SHAFT AND GEAR 88
Exploded View 88
Disassembly 88
Assembly 89
Inspection 89

SHIFT FORK AND FORK ROD 90
Exploded View 90
Disassembly 91
Assembly 92
Inspection 93

SERVICE DATA AND SPECIFICATIONS (SDS) 94

SERVICE DATA AND SPECIFICATIONS (SDS) 94
General Specifications 94
End Play 95
Baulk Ring Clearance 95
Shift Fork 95

7AT: RE7R01A

HOW TO USE THIS MANUAL 96

HOW TO USE THIS SECTION 96
How to Check A/T Type 96

BASIC INSPECTION 97

DIAGNOSIS AND REPAIR WORK FLOW 97
Diagnosis Flow 97
Question sheet 98

SYSTEM DESCRIPTION 100

A/T CONTROL SYSTEM 100
System Diagram 100
System Description 100
Component Parts Location 101
Component Description 102

LINE PRESSURE CONTROL 103
System Diagram 103
System Description 103
Component Parts Location 105
Component Description 106

SHIFT CHANGE CONTROL 107
System Diagram 107
System Description 107
Component Parts Location 110
Component Description 111

SHIFT PATTERN CONTROL 112

ASC (ADAPTIVE SHIFT CONTROL) 112
ASC (ADAPTIVE SHIFT CONTROL) : System Diagram 112
ASC (ADAPTIVE SHIFT CONTROL) : System Description 112
ASC (ADAPTIVE SHIFT CONTROL) : Component Parts Location 114
ASC (ADAPTIVE SHIFT CONTROL) : Component Description 115

MANUAL MODE 115
MANUAL MODE : System Diagram 116
MANUAL MODE : System Description 116
MANUAL MODE : Component Parts Location 117
MANUAL MODE : Component Description 118

LOCK-UP CONTROL 119
System Diagram 119
System Description 119
Component Parts Location 120
Component Description 121

SHIFT MECHANISM 122
Cross-Sectional View 122
System Diagram 124
System Description 124
Component Parts Location 147
Component Description 147

SHIFT LOCK SYSTEM 148
System Description 148
Component Parts Location 149
Component Description 149

ON BOARD DIAGNOSTIC (OBD) SYSTEM 150
Diagnosis Description 150

DIAGNOSIS SYSTEM (TCM) 151
CONSULT-III Function (TRANSMISSION) 151

DTC/CIRCUIT DIAGNOSIS 157

U0300 CAN COMMUNICATION DATA 157
Description 157
DTC Logic 157
Diagnosis Procedure 157

U1000 CAN COMM CIRCUIT 158
Description 158
DTC Logic 158
Diagnosis Procedure 158

P0615 STARTER RELAY 159
Description 159
DTC Logic 159
Diagnosis Procedure 159

P0705 TRANSMISSION RANGE SENSOR A.. 161
Description 161
DTC Logic 161
Diagnosis Procedure 161

P0710 TRANSMISSION FLUID TEMPERATURE SENSOR A 163
Description 163
DTC Logic 163
Diagnosis Procedure 164

P0717 INPUT SPEED SENSOR A 165
Description 165
DTC Logic 165
Diagnosis Procedure 165

P0720 OUTPUT SPEED SENSOR 167
Description 167
DTC Logic 167
Diagnosis Procedure 168

P0725 ENGINE SPEED 169
Description 169
DTC Logic 169
Diagnosis Procedure 169

P0729 6GR INCORRECT RATIO 171
Description 171
DTC Logic 171
Diagnosis Procedure 172

P0730 INCORRECT GEAR RATIO 173
Description 173
DTC Logic 173
Diagnosis Procedure 173

P0731 1GR INCORRECT RATIO 175
Description 175
DTC Logic 175
Diagnosis Procedure 176

P0732 2GR INCORRECT RATIO 177
Description 177
DTC Logic 177
Diagnosis Procedure 178

P0733 3GR INCORRECT RATIO 179
Description 179
DTC Logic 179
Diagnosis Procedure 180

P0734 4GR INCORRECT RATIO 181
Description 181
DTC Logic 181
Diagnosis Procedure 182

P0735 5GR INCORRECT RATIO 183
Description 183
DTC Logic 183
Diagnosis Procedure 184

P0740 TORQUE CONVERTER 185
Description 185
DTC Logic 185
Diagnosis Procedure 185

P0744 TORQUE CONVERTER 187
Description 187
DTC Logic 187
Diagnosis Procedure 187

P0745 PRESSURE CONTROL SOLENOID A. 189
Description 189
DTC Logic 189
Diagnosis Procedure 189

P0750 SHIFT SOLENOID A 190
Description 190
DTC Logic 190
Diagnosis Procedure 190

P0775 PRESSURE CONTROL SOLENOID B. 191
Description 191
DTC Logic 191
Diagnosis Procedure 191

P0780 SHIFT 192
Description 192
DTC Logic 192
Diagnosis Procedure 192

P0795 PRESSURE CONTROL SOLENOID C. 194
Description 194
DTC Logic 194
Diagnosis Procedure 194

P1705 TP SENSOR 195
Description 195
DTC Logic 195
Diagnosis Procedure 195

P1721 VEHICLE SPEED SIGNAL 197
Description 197
DTC Logic 197
Diagnosis Procedure 198

P1730 INTERLOCK 199
Description 199
DTC Logic 199
Judgment of A/T Interlock 199
Diagnosis Procedure 200

P1734 7GR INCORRECT RATIO 201
Description 201
DTC Logic 201
Diagnosis Procedure 202

P1815 M-MODE SWITCH 203
Description 203
DTC Logic 203
Diagnosis Procedure 204
Component Inspection (Manual Mode Switch) 207
Component Inspection [Paddle Shifter (Shift-up)].. 208

Component Inspection [Paddle Shifter (Shift-down)] 208

P2713 PRESSURE CONTROL SOLENOID D. 209
Description 209
DTC Logic 209
Diagnosis Procedure 209

P2722 PRESSURE CONTROL SOLENOID E. 210
Description 210
DTC Logic 210
Diagnosis Procedure 210

P2731 PRESSURE CONTROL SOLENOID F. 211
Description 211
DTC Logic 211
Diagnosis Procedure 211

P2807 PRESSURE CONTROL SOLENOID G. 212
Description 212
DTC Logic 212
Diagnosis Procedure 212

MAIN POWER SUPPLY AND GROUND CIRCUIT 213
Diagnosis Procedure 213

SHIFT POSITION INDICATOR CIRCUIT 215
Description 215
Component Function Check 215
Diagnosis Procedure 215

SHIFT LOCK SYSTEM 216
Description 216
Wiring Diagram - A/T SHIFT LOCK SYSTEM - 216

WITH ICC 218
WITH ICC : Component Function Check 218
WITH ICC : Diagnosis Procedure 219
WITH ICC : Component Inspection (Shift Lock Solenoid) 223
WITH ICC : Component Inspection (Shift Lock Relay) 223
WITH ICC : Component Inspection (Stop Lamp Switch) 224

WITHOUT ICC 224
WITHOUT ICC : Component Function Check 224
WITHOUT ICC : Diagnosis Procedure 224
WITHOUT ICC : Component Inspection (Shift Lock Solenoid) 227
WITHOUT ICC : Component Inspection (Stop Lamp Switch) 227

SELECTOR LEVER POSITION INDICATOR . 228
Description 228
Component Function Check 228
Diagnosis Procedure 228
Component Inspection (Selector Lever Position Indicator) 230

ECU DIAGNOSIS INFORMATION 232

TCM 232
Reference Value 232
Wiring Diagram - A/T CONTROL SYSTEM - 239
Fail-Safe 246
Protection Control 249
DTC Inspection Priority Chart 250
DTC Index 251

SYMPTOM DIAGNOSIS 253

SYSTEM SYMPTOM 253
Symptom Table 253

PRECAUTION 263

PRECAUTIONS 263
Precaution for Supplemental Restraint System (SRS) "AIR BAG" and "SEAT BELT PRE-TENSIONER" 263
General Precautions 263
Service Notice or Precaution 264

PREPARATION 265

PREPARATION 265
Special Service Tool 265
Commercial Service Tool 266

PERIODIC MAINTENANCE 267

A/T FLUID 267
Inspection 267
Changing 267
Adjustment 269

A/T FLUID COOLER 270
Cleaning 270
Inspection 272

STALL TEST 273
Inspection and Judgment 273

A/T POSITION 274
Inspection and Adjustment 274

REMOVAL AND INSTALLATION 276

A/T SHIFT SELECTOR 276

2WD 276
2WD : Exploded View 276
2WD : Removal and Installation 276
2WD : Inspection and Adjustment 277

AWD 277
AWD : Exploded View 278
AWD : Removal and Installation 278
AWD : Inspection and Adjustment 279

CONTROL ROD 280
Exploded View 280

Removal and Installation 280
Inspection and Adjustment 280

SELECTOR LEVER POSITION INDICATOR .. 281
Removal and Installation 281

PADDLE SHIFTER 282
Exploded View 282
Removal and Installation 282

CONTROL VALVE & TCM 283
Exploded View 283
Removal and Installation 283
Inspection and Adjustment 287

PARKING COMPONENTS 288

2WD 288
2WD : Exploded View 288
2WD : Removal and Installation 288
2WD : Inspection 292

REAR OIL SEAL 293

2WD 293
2WD : Exploded View 293
2WD : Removal and Installation 293
2WD : Inspection 294

AWD 294
AWD : Exploded View 294
AWD : Removal and Installation 294
AWD : Inspection 295

OUTPUT SPEED SENSOR 296

2WD 296
2WD : Exploded View 296
2WD : Removal and Installation 296
2WD : Inspection 300

AIR BREATHER HOSE 301

VQ25HR, VQ37VHR (2WD) 301
VQ25HR, VQ37VHR (2WD) : Exploded View 301
VQ25HR, VQ37VHR (2WD) : Removal and Installation 301

VQ25HR (AWD) 302
VQ25HR (AWD) : Exploded View 302
VQ25HR (AWD) : Removal and Installation 302

VQ37VHR (AWD) 303
VQ37VHR (AWD) : Exploded View 303
VQ37VHR (AWD) : Removal and Installation 303

FLUID COOLER SYSTEM 305

2WD 305
2WD : Exploded View 305
2WD : Removal and Installation 305
2WD : Inspection and Adjustment 307

AWD 307
AWD : Exploded View 307
AWD : Removal and Installation 308
AWD : Inspection and Adjustment 309

UNIT REMOVAL AND INSTALLATION ... 310

TRANSMISSION ASSEMBLY 310

2WD 310
2WD : Exploded View 310
2WD : Removal and Installation 310
2WD : Inspection and Adjustment 312

AWD 312
AWD : Exploded View 313
AWD : Removal and Installation 313
AWD : Inspection and Adjustment 315

UNIT DISASSEMBLY AND ASSEMBLY . 316

TRANSMISSION ASSEMBLY 316
Exploded View 316
Oil Channel 331
Location of Needle Bearings and Bearing Races .. 331
Location of Snap Rings 334
Disassembly 335
Assembly 352
Inspection 376

OIL PUMP, 2346 BRAKE, FRONT BRAKE PISTON 379
Exploded View 379
Disassembly 379
Assembly 383
Inspection and Adjustment 386

UNDER DRIVE CARRIER, FRONT BRAKE HUB 388
Exploded View 388
Disassembly 388
Assembly 389
Inspection 389

FRONT CARRIER, INPUT CLUTCH, REAR INTERNAL GEAR 391
Exploded View 391
Disassembly 393
Assembly 394
Inspection 396

MID SUN GEAR, REAR SUN GEAR, HIGH AND LOW REVERSE CLUTCH HUB 397
Exploded View 397
Disassembly 397
Assembly 399
Inspection 401

HIGH AND LOW REVERSE CLUTCH 402
Exploded View 402
Disassembly 403
Assembly 403

Inspection 404

DIRECT CLUTCH 405
Exploded View 405
Disassembly 405
Assembly 405
Inspection 406

SERVICE DATA AND SPECIFICATIONS (SDS) 407

SERVICE DATA AND SPECIFICATIONS (SDS) 407
General Specification 407
Vehicle Speed at Which Gear Shifting Occurs 407
Vehicle Speed at Which Lock-up Occurs/Releases 408
Stall Speed 408
Torque Converter 409
Total End Play 409
Reverse Brake Clearance 409
Front Brake Clearance 409
2346 Brake Clearance 409

SYSTEM DESCRIPTION

M/T SYSTEM

System Diagram

INFOID:0000000006207579

CROSS-SECTIONAL VIEW

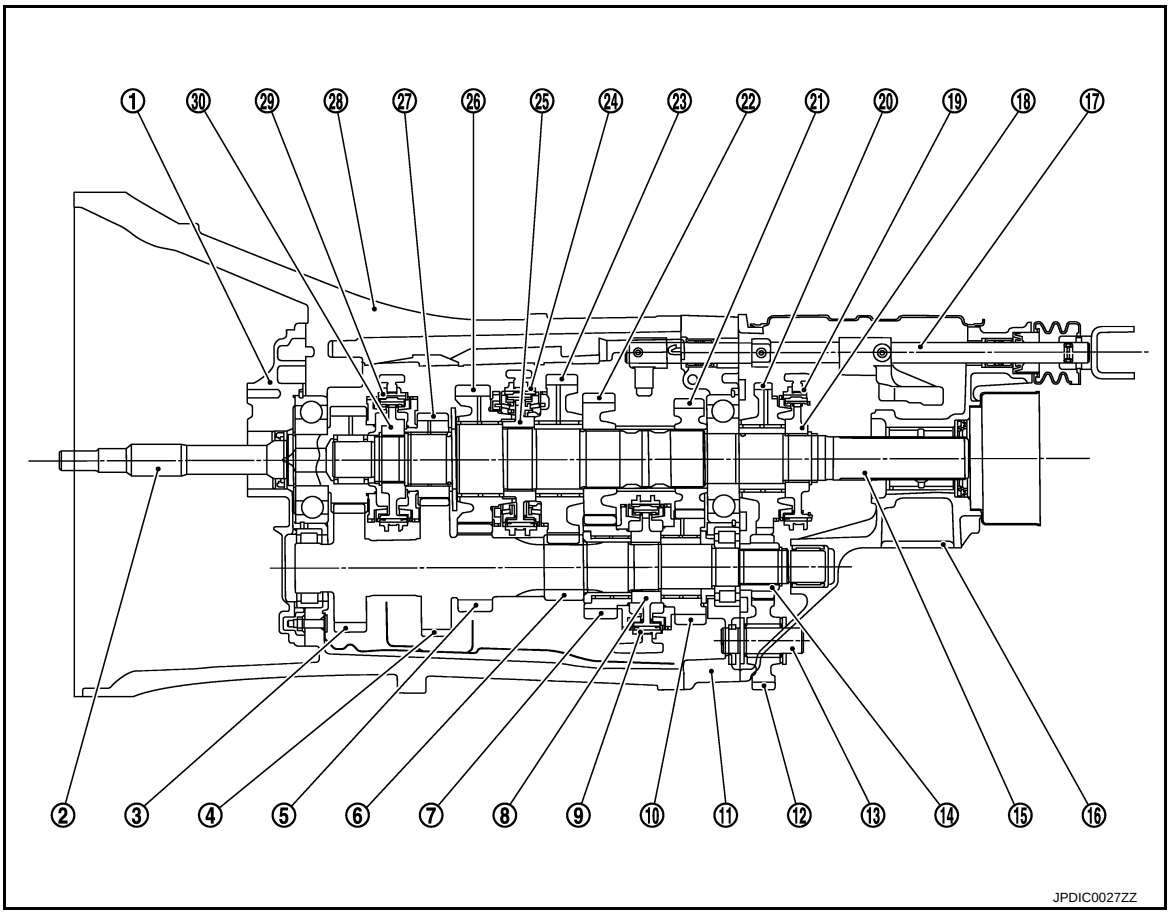

1. Front cover
2. Main drive gear
3. Counter shaft
4. 6th counter gear
5. 2nd counter gear
6. 1st counter gear
7. 3rd counter gear
8. 3rd-4th synchronizer hub
9. 3rd-4th coupling sleeve
10. 4th counter gear
11. Adapter plate
12. Reverse idler gear
13. Reverse idler shaft
14. Reverse counter gear
15. Mainshaft
16. Rear extension
17. Striking rod
18. Reverse synchronizer hub
19. Reverse coupling sleeve
20. Reverse main gear
21. 4th main gear
22. 3rd main gear
23. 1st main gear
24. 1st-2nd coupling sleeve
25. 1st-2nd synchronizer hub
26. 2nd main gear
27. 6th main gear
28. Transmission case
29. 5th-6th coupling sleeve
30. 5th-6th synchronizer hub

System Description

INFOID:0000000006207580

DOUBLE-CONE SYNCHRONIZER

The 4th gear is equipped with a double-cone synchronizer to reduce the operating force of the control lever.

TRIPLE-CONE SYNCHRONIZER

The 1st, 2nd, and 3rd gears are equipped with a triple-cone synchronizer to reduce the operating force of the control lever.

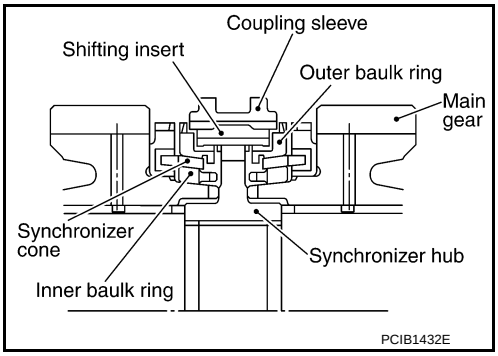

DTC/CIRCUIT DIAGNOSIS

BACK-UP LAMP SWITCH

Component Parts Location

INFOID:0000000006207581

1 : Back-up lamp switch

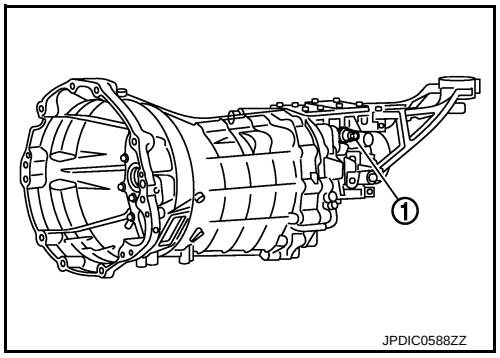

Component Inspection

INFOID:0000000006207582

1. CHECK BACK-UP LAMP SWITCH

1. Disconnect back-up lamp switch connector.
2. Check continuity between back-up lamp switch terminals.

Terminal		Condition	Continuity
1	2	Reverse gear position	Existed
		Except reverse gear position	Not existed

Is the inspection result normal?

YES >> INSPECTION END
NO >> Replace back-up lamp switch. Refer to TM-32, "Exploded View".

PARK/NEUTRAL POSITION SWITCH

Component Parts Location

INFOID:0000000006207583

1 : Park/Neutral position (PNP) switch

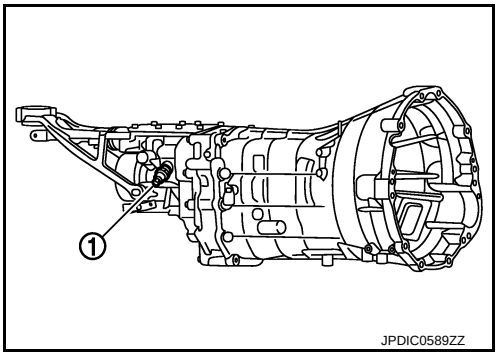

Component Inspection

INFOID:0000000006207584

1. CHECK PARK/NEUTRAL POSITION (PNP) SWITCH

1. Disconnect park/neutral position (PNP) switch connector.
2. Check continuity between park/neutral position (PNP) switch terminals.

Terminal		Condition	Continuity
1	2	Neutral position	Existed
		Except neutral position	Not existed

Is the inspection result normal?

YES >> INSPECTION END
NO >> Replace park/neutral position (PNP) switch. Refer to TM-32, "Exploded View".

SYMPTOM DIAGNOSIS

NOISE, VIBRATION AND HARSHNESS (NVH) TROUBLESHOOTING

NVH Troubleshooting Chart

INFOID:0000000006207585

Use the chart below to find the cause of the symptom. The numbers indicate the order of the inspection. If necessary, repair or replace these parts.

SUSPECTED PARTS (Possible cause)		OIL (Oil level is low)	OIL (Wrong oil)	OIL (Oil level is high)	GASKET (Damaged)	OIL SEAL (Worn or damaged)	SHIFT CONTROL LINKAGE (Worn)	CHECK PLUG RETURN SPRING AND CHECK BALL (Worn or damaged)	SHIFT FORK (Worn)	GEAR (Worn or damaged)	BEARING (Worn or damaged)	BAULK RING (Worn or damaged)	INSERT SPRING (Damaged)
Reference			TM-18		TM-32		TM-20	TM-32		TM-32			
Symptoms	Noise	1	2							3	3		
	Oil leakage		3	1	2	2							
	Hard to shift or will not shift		1	1			2					2	2
	Jumps out of gear						1	1	2	2			

PRECAUTION

PRECAUTIONS

Precaution for Supplemental Restraint System (SRS) "AIR BAG" and "SEAT BELT PRE-TENSIONER"

INFOID:0000000006207586

The Supplemental Restraint System such as “AIR BAG” and “SEAT BELT PRE-TENSIONER”, used along with a front seat belt, helps to reduce the risk or severity of injury to the driver and front passenger for certain types of collision. This system includes seat belt switch inputs and dual stage front air bag modules. The SRS system uses the seat belt switches to determine the front air bag deployment, and may only deploy one front air bag, depending on the severity of a collision and whether the front occupants are belted or unbelted.
Information necessary to service the system safely is included in the “SRS AIR BAG” and “SEAT BELT” of this Service Manual.

WARNING:

Always observe the following items for preventing accidental activation.

- **To avoid rendering the SRS inoperative, which could increase the risk of personal injury or death in the event of a collision that would result in air bag inflation, all maintenance must be performed by an authorized NISSAN/INFINITI dealer.**
- **Improper maintenance, including incorrect removal and installation of the SRS, can lead to personal injury caused by unintentional activation of the system. For removal of Spiral Cable and Air Bag Module, see “SRS AIR BAG”.**
- **Never use electrical test equipment on any circuit related to the SRS unless instructed to in this Service Manual. SRS wiring harnesses can be identified by yellow and/or orange harnesses or harness connectors.**

PRECAUTIONS WHEN USING POWER TOOLS (AIR OR ELECTRIC) AND HAMMERS

WARNING:

Always observe the following items for preventing accidental activation.

- **When working near the Air Bag Diagnosis Sensor Unit or other Air Bag System sensors with the ignition ON or engine running, never use air or electric power tools or strike near the sensor(s) with a hammer. Heavy vibration could activate the sensor(s) and deploy the air bag(s), possibly causing serious injury.**
- **When using air or electric power tools or hammers, always switch the ignition OFF, disconnect the battery, and wait at least 3 minutes before performing any service.**

Precautions Necessary for Steering Wheel Rotation After Battery Disconnection

INFOID:0000000006207587

CAUTION:

Comply with the following cautions to prevent any error and malfunction.

- **Before removing and installing any control units, first turn the ignition switch to the LOCK position, then disconnect both battery cables.**
- **After finishing work, confirm that all control unit connectors are connected properly, then re-connect both battery cables.**
- **Always use CONSULT to perform self-diagnosis as a part of each function inspection after finishing work. If a DTC is detected, perform trouble diagnosis according to self-diagnosis results.**

For vehicle with steering lock unit, if the battery is disconnected or discharged, the steering wheel will lock and cannot be turned.
If turning the steering wheel is required with the battery disconnected or discharged, follow the operation procedure below before starting the repair operation.

OPERATION PROCEDURE

1. Connect both battery cables.
   NOTE:
   Supply power using jumper cables if battery is discharged.
2. Turn the ignition switch to ACC position.
   (At this time, the steering lock will be released.)
3. Disconnect both battery cables. The steering lock will remain released with both battery cables disconnected and the steering wheel can be turned.

4. Perform the necessary repair operation.
5. When the repair work is completed, re-connect both battery cables. With the brake pedal released, turn the ignition switch from ACC position to ON position, then to LOCK position. (The steering wheel will lock when the ignition switch is turned to LOCK position.)
6. Perform self-diagnosis check of all control units using CONSULT.

Precaution for Procedure without Cowl Top Cover

INFOID:0000000006207588

When performing the procedure after removing cowl top cover, cover the lower end of windshield with urethane, etc to prevent damage to windshield.

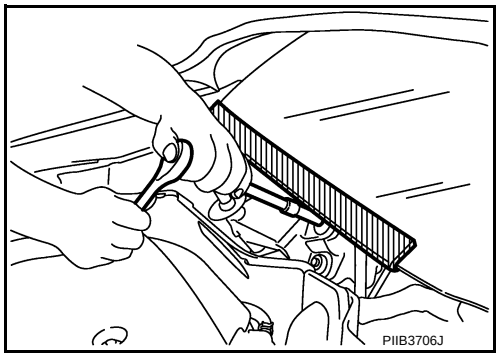

Service Notice or Precautions for Manual Transmission

INFOID:0000000006207589

CAUTION:

- **Never reuse CSC (Concentric Slave Cylinder) body and CSC tube. Because CSC slides back to the original position every time when removing transmission assembly. At this timing, dust on the sliding parts may damage a seal of CSC and may cause clutch fluid leakage. Refer to CL-17, "Removal and Installation".**
- **Never reuse drained gear oil.**
- **Check the oil level or replace oil with vehicle on level ground.**
- **During removal or installation, keep inside of transmission clear of dust or dirt.**
- **Check for the correct installation status prior to removal or disassembly. If matching marks are required, be certain they never interfere with the function of the parts they are applied.**
- **In principle, tighten bolts or nuts gradually in several steps working diagonally from inside to outside. If tightening sequence is specified, observe it.**
- **Never damage sliding surfaces and mating surfaces.**
- **Never hold control lever housing to prevent the bushing of control lever housing from deformation when moving transmission assembly.**
- **Never touch lip of oil seal.**

PREPARATION

PREPARATION

Special Service Tools

INFOID:0000000006207590

The actual shapes of Kent-Moore tools may differ from those of special service tools illustrated here.

Tool number (Kent-Moore No.) Tool name	Description
KV381054S0 (J-34286) Puller 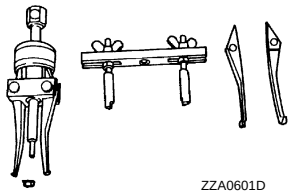 ZZA0601D	Removing rear oil seal
ST33400001 (J-26082) Drift a: 60 mm (2.36 in) dia. b: 47 mm (1.85 in) dia. 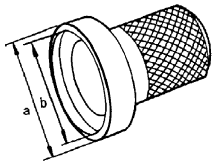 ZZA0814D	Installing rear oil seal
ST22490000 (-) Adapter setting plate a: 156 mm (6.14 in) b: 220 mm (8.66 in) 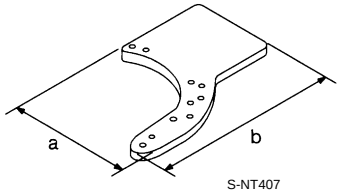 S-NT407	Holding an adapter plate
ST33200000 (J-26082) Drift a: 60 mm (2.36 in) dia. b: 44.5 mm (1.752 in) dia. 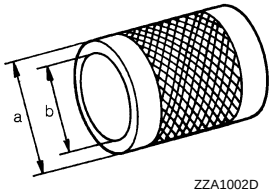 ZZA1002D	Installing counter rear bearing
KV32103300 (J-46529) Press plate a: 73 mm (2.87 in) 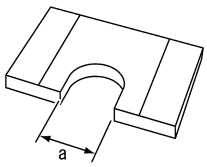 PCIB0165J	Installing reverse synchronizer hub assembly
ST01530000 (-) Drift a: 50 mm (1.97 in) dia. b: 41 mm (1.61 in) dia. 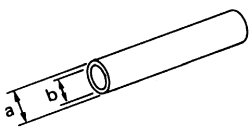 ZZA0534D	Installing reverse synchronizer hub assembly

Tool number (Kent-Moore No.) Tool name	Description
ST23860000 (-) Drift a: 38 mm (1.50 in) dia. b: 33 mm (1.30 in) dia. 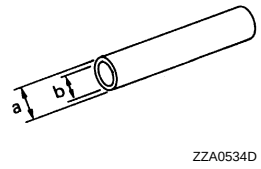 ZZA0534D	Installing reverse counter gear
KV38102100 (J-25803-01) Drift a: 44 mm (1.73 in) dia. b: 36 mm (1.42 in) dia. c: 24.5 mm (0.965 in) dia. 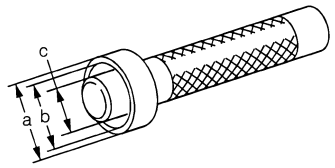 ZZA1046D	Installing front oil seal
ST33061000 (J-8107-2) Drift a: 28.5 mm (1.122 in) dia. b: 38 mm (1.50 in) dia. 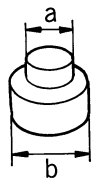 ZZA1023D	Installing striking rod oil seal
KV32102700 (-) Drift a: 48.6 mm (1.913 in) dia. b: 41.6 mm (1.638 in) dia. 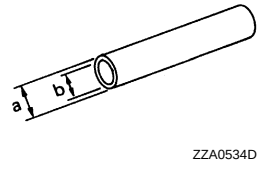 ZZA0534D	Installing main drive gear bearing
ST30911000 (-) Inserter a: 98 mm (3.86 in) dia. b: 40.5 mm (1.594 in) dia. 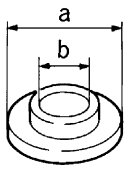 ZZA0920D	• Installing 5th-6th synchronizer hub assembly • Installing mainshaft bearing • Installing reverse main gear bushing • Installing 3rd gear bushing • Installing 3rd-4th synchronizer hub assembly
ST27861000 (-) Support ring a: 62 mm (2.44 in) dia. b: 52 mm (2.05 in) dia. 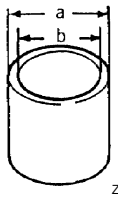 ZZA0832D	• Installing 1st-2nd synchronizer hub assembly • Installing 1st gear bushing
ST30022000 (-) Inserter a: 110 mm (4.33 in) dia. b: 46 mm (1.81 in) dia. 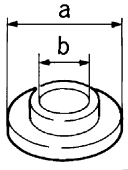 ZZA0920D	• Installing 3rd main gear • Installing 4th main gear

Tool number (Kent-Moore No.) Tool name	Description
KV40100630 (J-26092) Inserter a: 67.5 mm (2.657 in) dia. b: 38.5 mm (1.516 in) dia. 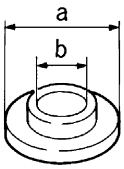 ZZA0920D	Installing 4th counter gear thrust washer
ST30032000 (J-26010-01) Inserter a: 80 mm (3.15 in) dia. b: 31 mm (1.22 in) dia. 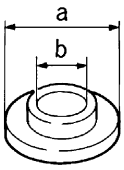 ZZA0920D	Installing counter rear bearing inner race
ST30031000 (J-22912-01) Puller 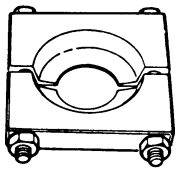 ZZA0537D	Measuring wear of inner baulk ring

Commercial Service Tools

INFOID:0000000006207591

Tool name	Description
Puller 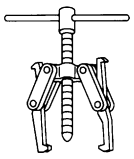 NT077	• Removing reverse main gear • Removing reverse synchronizer hub • Removing reverse counter gear
Puller 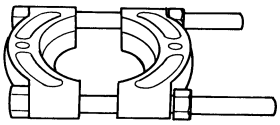 ZZB0823D	Removing each bearing, gear, and bushing

Tool name	Description
Pin punch a: 6 mm (0.24 in) dia. 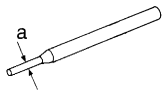 NT410	Removing and installing each retaining pin
Power tool 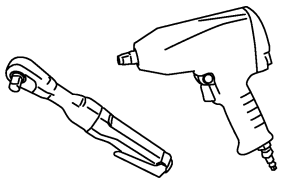 PBIC0190E	Loosening bolts and nuts

PERIODIC MAINTENANCE

GEAR OIL

Inspection

INFOID:0000000006207592

OIL LEAKAGE

Make sure that gear oil is not leaking from transmission or around it.

OIL LEVEL

1. Remove filler plug (1) and gasket from transmission case.
2. Check the oil level from filler plug mounting hole as shown in the figure.
   CAUTION:
   Never start engine while checking oil level.
3. Set a gasket on filler plug and then install it to transmission case.
   CAUTION:
   Never reuse gasket.
4. Tighten filler plug to the specified torque. Refer to TM-32, "Exploded View".

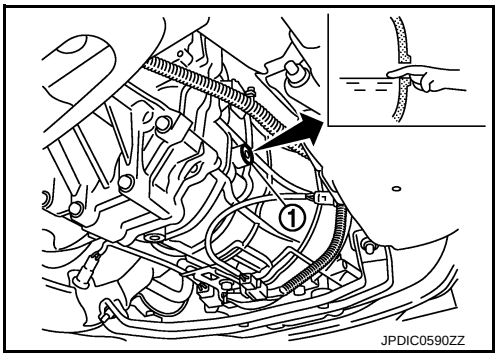

Draining

INFOID:0000000006207593

1. Start the engine and let it run to warm up transmission.
2. Stop the engine.
3. Remove drain plug and gasket from transmission case and then drain gear oil.
4. Set a gasket on drain plug and install it to transmission case.
   CAUTION:
   Never reuse gasket.
5. Tighten drain plug to the specified torque. Refer to TM-32, "Exploded View".

Refilling

INFOID:0000000006207594

1. Remove filler plug (1) and gasket from transmission case.
2. Fill with new gear oil to transmission as shown in the figure.

Oil grade and viscosity	**: Refer to MA-13, "Fluids and Lubricants".**
Oil capacity	**: Refer to TM-94, "General Specifications".**

   CAUTION:
   Never reuse drained gear oil.
3. After refilling gear oil, check the oil level. Refer to TM-18, "Inspection".
4. Set a gasket on filler plug and then install it to transmission case.
   CAUTION:
   Never reuse gasket.
5. Tighten filler plug to the specified torque. Refer to TM-32, "Exploded View".

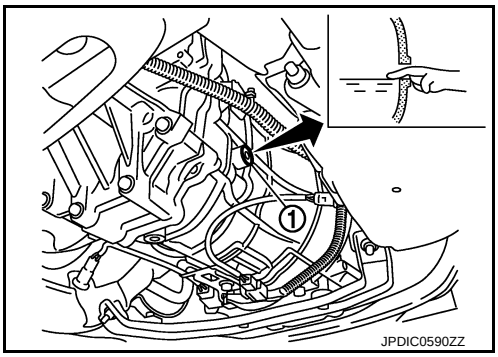

REMOVAL AND INSTALLATION

REAR OIL SEAL

Removal and Installation

INFOID:0000000006207595

REMOVAL

1. Separate propeller shaft assembly. Refer to DLN-94, "Removal and Installation".
2. Remove rear oil seal from rear extension using the puller [SST: KV381054S0 (J-34286)].
   CAUTION:
   Never damage rear extension.

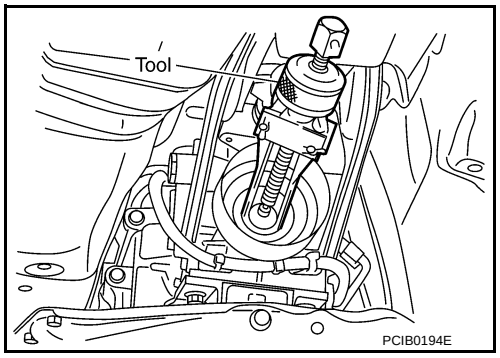

INSTALLATION

1. Install rear oil seal (1) to rear extension using the drift [SST: ST33400001 (J-26082)].

   Dimension “H” : 1.2 – 2.2 mm (0.047 – 0.087 in)

   CAUTION:
   Never incline rear oil seal.
2. Install propeller shaft assembly. Refer to DLN-94, "Removal and Installation".

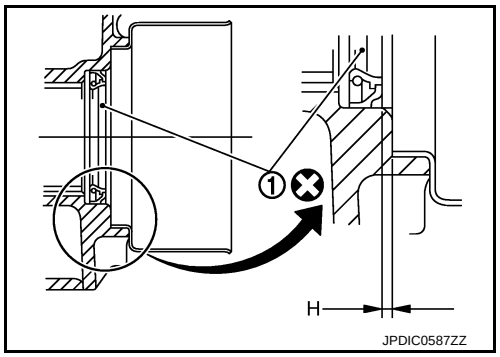

Inspection

INFOID:0000000006207596

INSPECTION AFTER INSTALLATION

Check the oil leakage and the oil level. Refer to TM-18, "Inspection".

SHIFT CONTROL

Exploded View

INFOID:0000000006207597

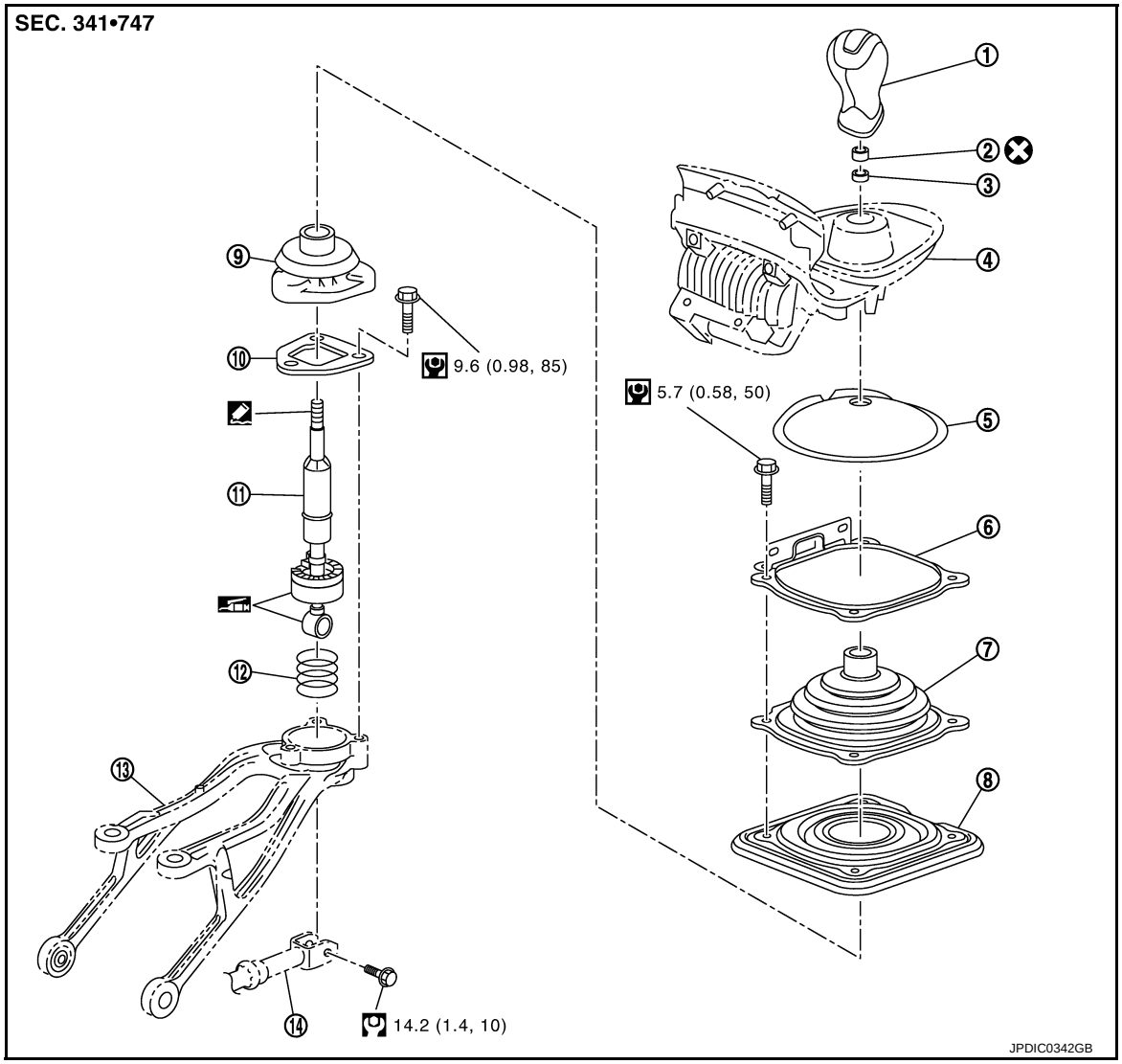

1. Shift knob
2. Insulator
3. Seat
4. Console finisher assembly
5. Felt
6. Hole cover
7. Control lever boot B
8. Hole insulator
9. Control lever boot A
10. Guide plate
11. Control lever
12. Control lever spring
13. Control lever housing
14. Control rod

: Apply multi-purpose grease.

: Apply Genuine Medium Strength Thread Locking Sealant or an equivalent. Refer to GI-22, "Recommended Chemical Products and Sealants".

Refer to GI-4, "Components" for symbols not described on the above.

Removal and Installation

INFOID:0000000006207598

REMOVAL

1. Remove shift knob with the following procedure.

a. Release metal clips on console finisher assembly. Refer to IP-40, "M/T MODELS : Removal and Installation".

b. Lift console finisher assembly and then set suitable pliers to control lever.
CAUTION:
Put waste cloth (A) between a suitable pliers and control lever to avoid damaging control lever.

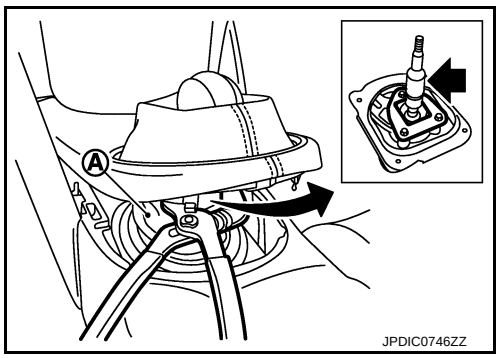

c. Set suitable pliers to shift knob.
CAUTION:
Put waste cloth (A) between a suitable pliers and shift knob to avoid damaging shift knob.

d. Keeping control lever in place with a suitable pliers, loosen shift knob with a suitable pliers.
NOTE:
Remove shift knob from control lever keeping a suitable pliers in place because a certain power to turn shift knob is still necessary even after adhesive is peeled.

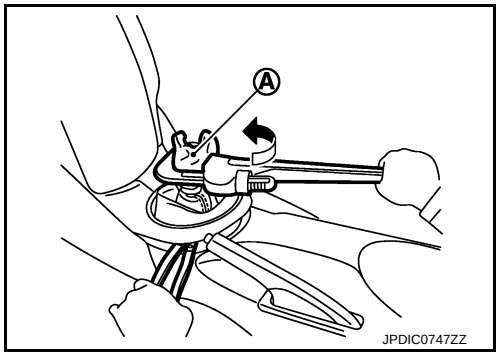

e. Remove shift knob from control lever.
f. Remove insulator from shift knob.
2. Remove seat from control lever.
CAUTION:
Never lose seat.
3. Remove console finisher assembly.
4. Remove center console assembly. Refer to IP-40, "M/T MODELS : Removal and Installation".
5. Release control rod boot from control lever housing.
6. Remove mounting bolt (⬅) and then separate control lever and control rod.

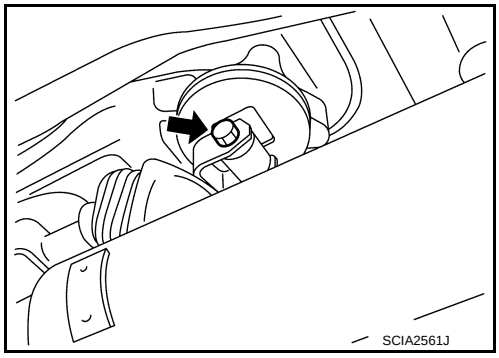

7. Remove felt.

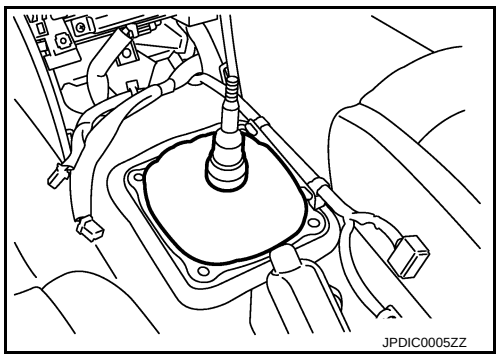

8. Remove mounting bolts (⬅) and then remove hole cover.

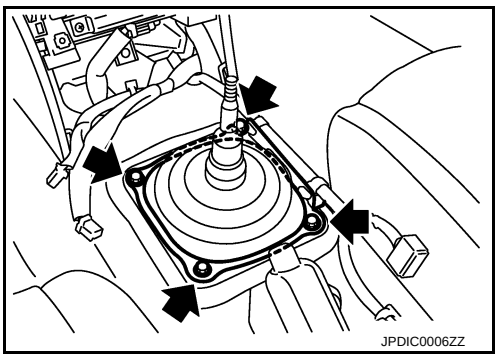

9. Remove control lever boot B, hole insulator, and control lever boot A.

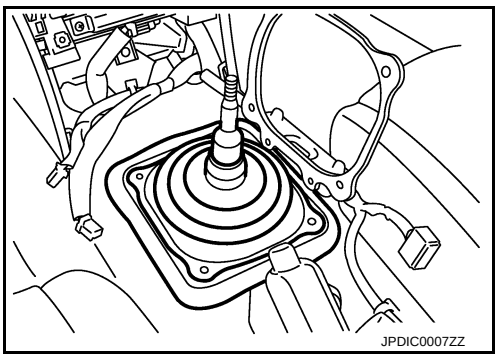

10. Remove mounting bolts (⬅) while holding guide plate.
11. Remove guide plate, control lever, and control lever spring from control lever housing.

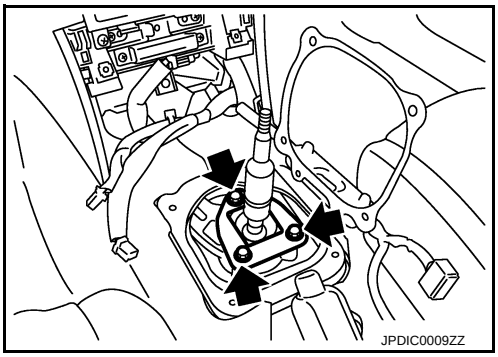

INSTALLATION

1. Apply multi-purpose grease to sliding surface of control lever.
2. Install control lever spring, control lever, and guide plate to control lever housing.
3. Temporarily tighten guide plate mounting bolts while holding guide plate.
4. Install control lever to control rod and then tighten mounting bolt (⬅) to the specified torque.
5. Install control rod boot to control lever housing.
   CAUTION:
   Fit control rod boot to the groove on control lever housing.

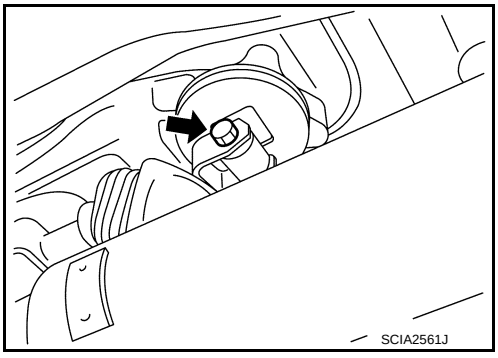

6. Install guide plate with the following procedure.

a. Shift the control lever to 6th gear position (A).
b. Lightly shift control lever to the reverse gear direction until it stops, and keep control lever in this position.
c. Set guide plate so that guide plate portion (B) contacts control lever portion (C).
d. Temporarily tighten mounting bolt (D).

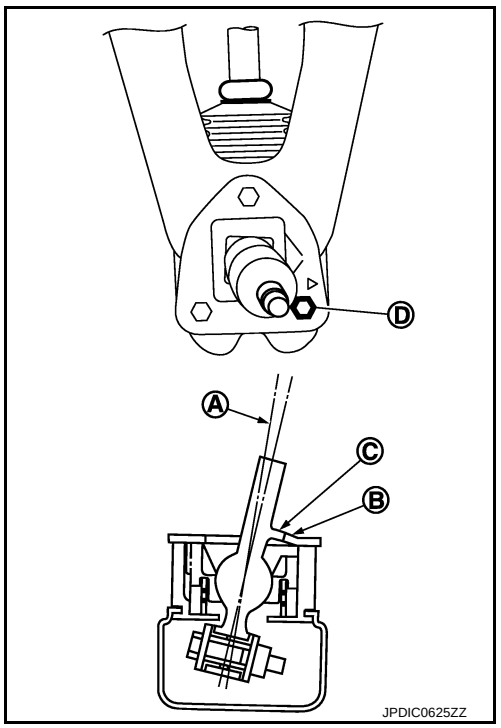

e. Shift the control lever to 5th gear position (A).
f. Lightly shift control lever to the reverse gear direction until it stops, and keep control lever in this position.
g. Set guide plate so that guide plate portion (B) contacts control lever portion (C).
h. Tighten mounting bolt (D) to the specified torque.
i. Tighten mounting bolts (E) and (F) to the specified torque.

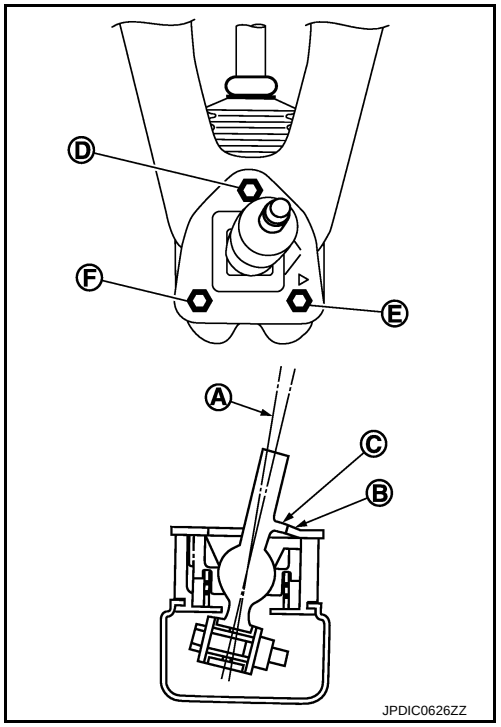

7. Install control lever boot A (1) to control lever (2).
CAUTION:
- **Check that groove of control lever boot A is engaged to guide plate (3).**
- **Be careful that control lever boot A is installed according to the specified location (⬅).**

8. Install hole insulator and control lever boot B.
CAUTION:
Be careful with the orientation of hole insulator and control lever boot B.

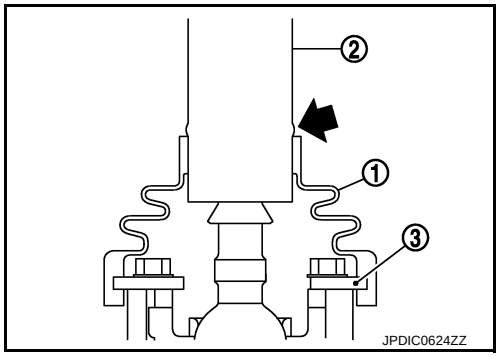

9. Install hole cover and then tighten mounting bolts (⬅) to the specified torque.
CAUTION:
Be careful with the orientation of hole cover.

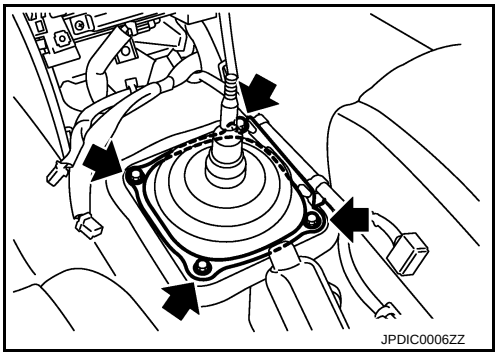

10. Install felt.
11. Install center console assembly. Refer to IP-40, "M/T MODELS : Removal and Installation".
12. Install console finisher assembly. Refer to IP-40, "M/T MODELS : Removal and Installation".

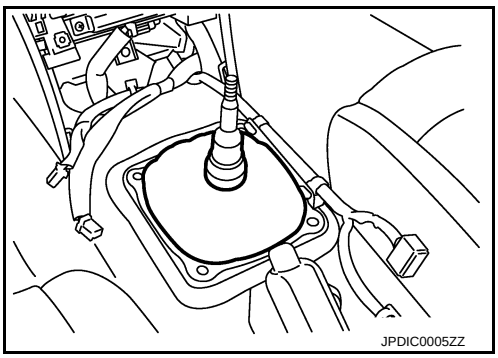

13. Install seat (1) and insulator (2) to control lever (3).
CAUTION:
- **Be careful with the orientation of seat.**
- **Never lose seat.**

14. Apply thread locking sealant to control lever threads and then install shift knob to control lever.
- **Use Genuine Medium Strength Thread Locking Sealant or an equivalent. Refer to GI-22, "Recommended Chemical Products and Sealants".**

CAUTION:
Remove the remaining adhesive on control lever and shift knob threads.

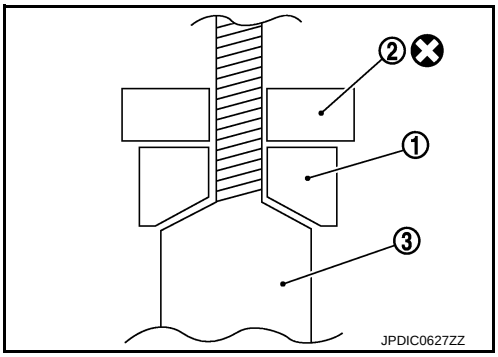

15. Set shift knob in the correct position with the following procedure.

a. When tightening shift knob, if shift knob comes to the proper position within 1/2 turn from the position at which resistance begins to be felt, tighten it 1 more turn to set it in the proper position.

⇦ : Vehicle front
A : Proper position
B : Start position on reaction force

b. If it takes more than 1/2 turn from the position at which resistance begins to be felt, tighten it to set it in the proper position.

CAUTION:
- **Never adjust shift knob with loosing.**
- **After adjusting to the proper position, until 30 minutes pass, never operate the shift intensely such as screwing or turning shift knob to opposite direction since a locking sealant because stiff.**

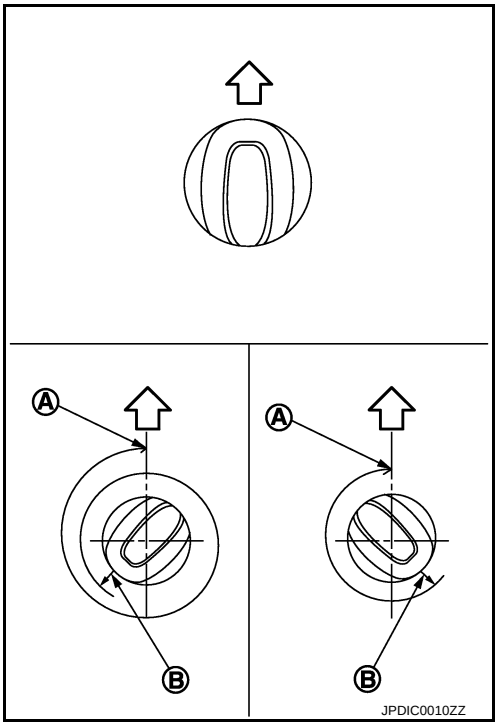

Inspection

INFOID:0000000006207599

INSPECTION AFTER INSTALLATION

Control Lever
- When control lever is shifted to each gear position, check that there is no interference or boot disengagement.
- When control lever is shifted to each gear position, check that there is no binding, noise, or backlash that disturbs shifting.
- When control lever is shifted to the 5th or 6th gear position by being pressed in the right side direction without being pressed downward, check that there is no binding or poor gear engagement.
- When control lever is shifted to the 1st-2nd side and released, check that control lever returns smoothly to the neutral position.
- When control lever is shifted to the 5th-6th side and released, check that control lever returns smoothly to the neutral position.
- When control lever is in a position other than the reverse gear position, check that control lever can be pressed downward.
- When control lever is pressed and held downward, check that control lever can be shifted to the reverse gear position.
- When control lever is shifted from the reverse gear position to the neutral position, check that control lever returns smoothly to the neutral position with spring power.
- When control lever is not pressed downward, check that control lever cannot be shifted to the reverse gear position.

Shift Knob
Check that there is no shift knob dislocation.

Boot
Check that there is no damage, twist, or dislocation of boot.

AIR BREATHER HOSE

Exploded View

INFOID:0000000006207600

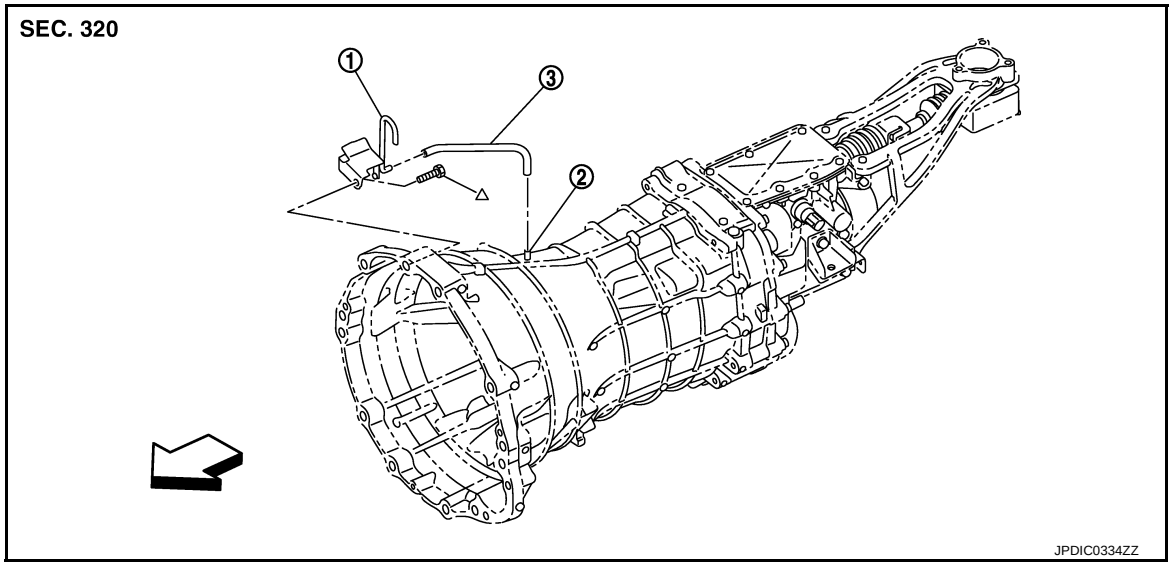

1. Air breather tube
2. Breather tube
3. Air breather hose

⇦: Vehicle front

△: Refer to “INSTALLATION” in TM-28, "Removal and Installation" for the tightening torque.

Removal and Installation

INFOID:0000000006207601

REMOVAL

Refer to TM-26, "Exploded View" for removal procedure.

INSTALLATION

Note the following, and refer to TM-26, "Exploded View" for installation procedure.

CAUTION:

- **Make sure there are no pinched or restricted areas on the air breather hose caused by bending or winding when installing it.**
- **Be sure to insert air breather hose into breather tube until hose end reaches the tube's base.**

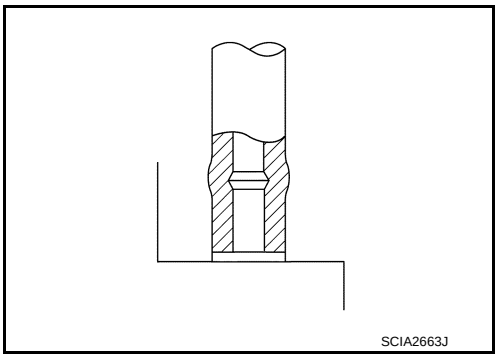

- **Be sure to insert air breather hose into air breather tube until hose end reaches the radius curve end.**

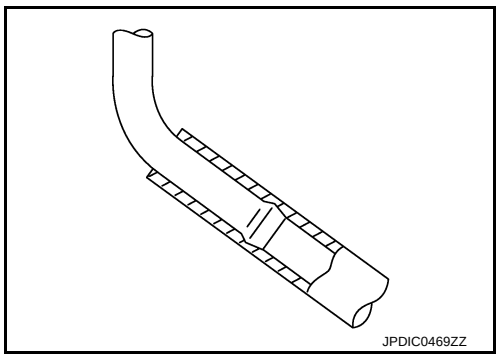

UNIT REMOVAL AND INSTALLATION

TRANSMISSION ASSEMBLY

Exploded View

INFOID:0000000006207602

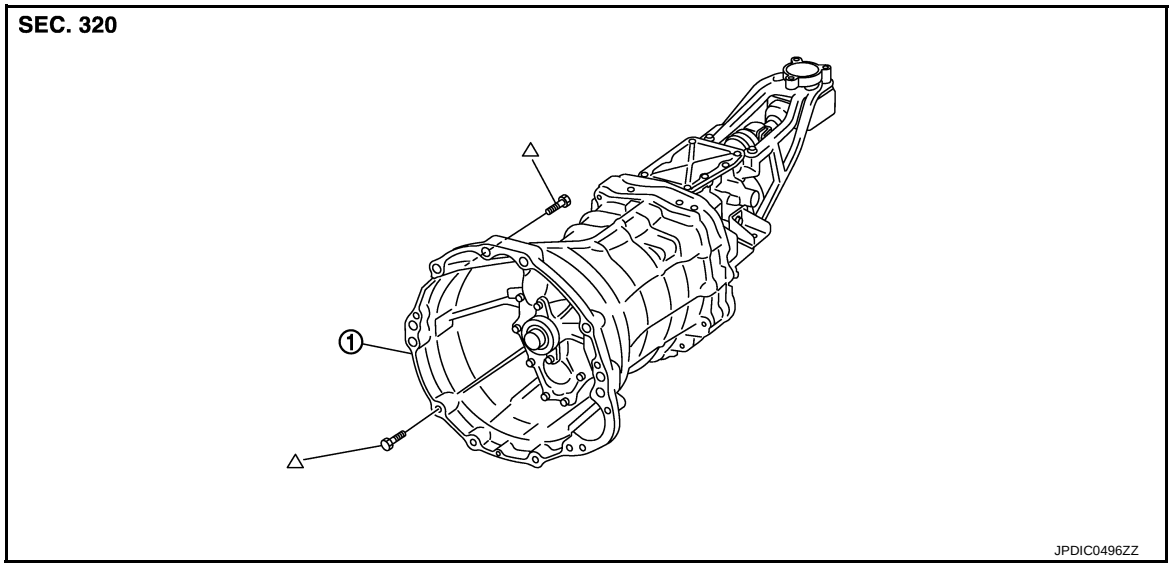

1. Transmission assembly

△: Refer to "INSTALLATION" in TM-28, "Removal and Installation" for the locations and tightening torque.

Removal and Installation

INFOID:0000000006207603

CAUTION:
Never reuse CSC (Concentric Slave Cylinder) body and CSC tube. Because CSC slides back to the original position every time when removing transmission assembly. At this timing, dust on the sliding parts may damage a seal of CSC and may cause clutch fluid leakage. Refer to CL-17, "Removal and Installation".

REMOVAL

1. Disconnect the battery cable from the negative terminal.
2. Remove exhaust mounting bracket. Refer to EX-6, "Removal and Installation".
3. Remove suspension member stay. Refer to FSU-22, "Removal and Installation".
4. Remove exhaust front tube, center muffler, main muffler (RH), and main muffler (LH). Refer to EX-6, "Removal and Installation".
5. Separate propeller shaft assembly. Refer to DLN-94, "Removal and Installation".
   NOTE:
   Insert a suitable plug into rear oil seal of transmission assembly after removing propeller shaft assembly.
6. Remove control lever with the following procedure.

a. Release control rod boot from control lever housing.

b. Remove mounting bolt (⬅) and then separate control lever from control rod.

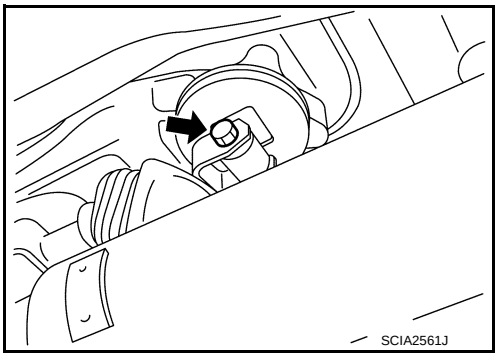

c. Remove console finisher assembly as shown in the figure. Refer to IP-24, "M/T MODELS : Removal and Installation".

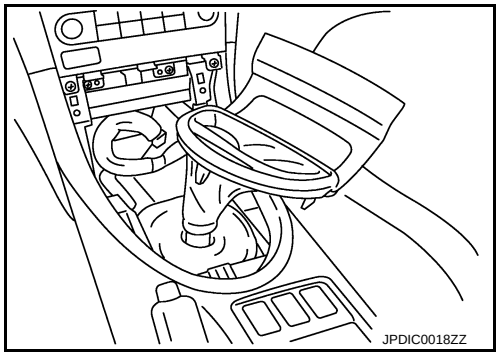

d. Remove felt as shown in the figure.

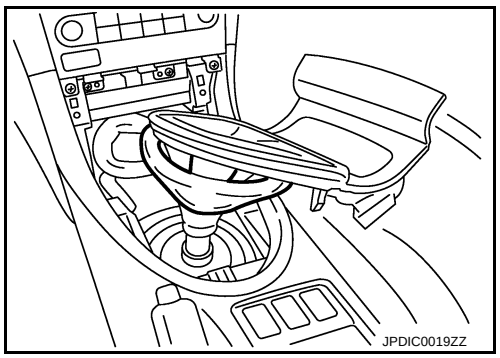

e. Remove center console assembly to remove hole cover as shown in the figure. Refer to IP-24, "M/T MODELS : Removal and Installation".

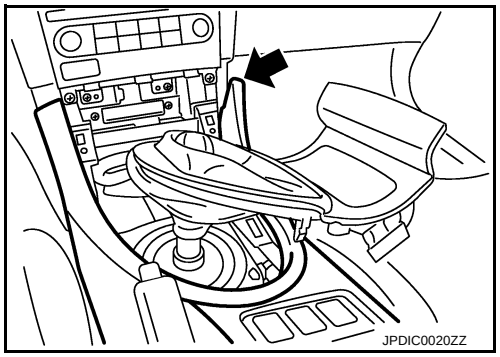

f. Remove mounting bolts (⬅) and then remove hole cover.
CAUTION:
Never damage center console assembly.

g. Remove control lever boot B, hole insulator, and control lever boot A.

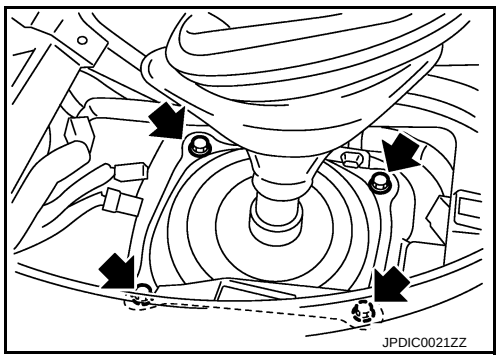

h. Remove mounting bolts (⬅) while holding guide plate.

i. Remove guide plate, control lever, and control lever spring from control lever housing.

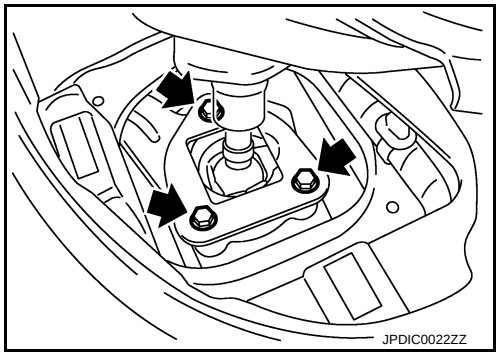

7. Remove clutch tube (1), clutch hose (2), and lock plate (3). Refer to CL-16, "Removal and Installation".

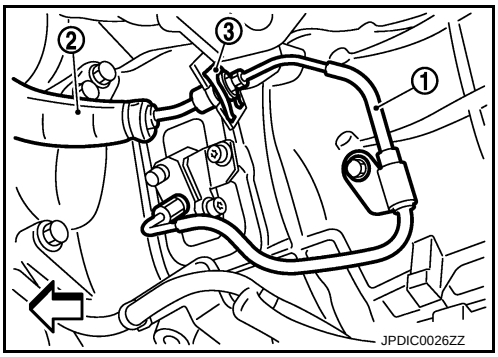

⇦ : Vehicle front

CAUTION:
- **Keep painted surface on the body or other parts free of clutch fluid. If it spills, wipe up immediately and wash the affected area with water.**
- **Never depress clutch pedal during removal procedure.**

NOTE:
Insert a suitable plug into clutch hose and CSC tube after removing clutch tube.

8. Remove crankshaft position sensor. Refer to EM-276, "Exploded View".

CAUTION:
- **Handle carefully to avoid dropping and shocks.**
- **Never disassemble.**
- **Never allow metal powder to adhere to magnetic part at sensor tip.**
- **Never place sensors in a location where they are exposed to magnetism.**

9. Remove starter motor. Refer to STR-18, "Removal and Installation".
10. Remove rear plate cover. Refer to EM-199, "Removal and Installation".
11. Disconnect park/neutral position (PNP) switch connector.
12. Disconnect heated oxygen sensor 2 (bank 1) and heated oxygen sensor 2 (bank 2) connectors. Refer to EX-6, "Removal and Installation".

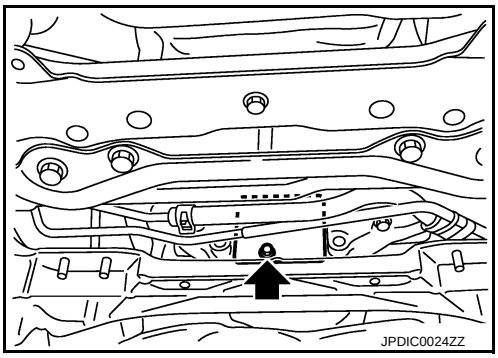

13. Set a suitable jack to the transmission assembly.

CAUTION:
When setting a suitable jack, be careful so that it does not contact with the wire harness.

NOTE:
By placing wooden block between oil pan (upper) and front suspension member, the removal of transmission assembly from engine becomes easier.

14. Remove engine mounting insulator (rear) mounting nuts. Refer to EM-224, "2WD : Removal and Installation".
15. Remove rear engine mounting member. Refer to EM-224, "2WD : Removal and Installation".

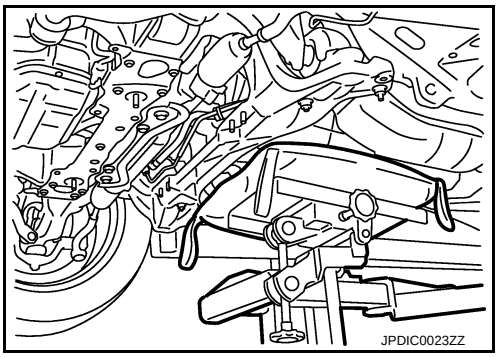

16. Remove engine and transmission mounting bolts using a power tool [Commercial service tool].
17. Lower a suitable jack to the position where the back-up lamp switch connector can be disconnect. Then disconnect back-up lamp switch connector.
18. Remove harness and harness brackets and then temporarily secure it to a position where it will not inhibit work.
19. Remove transmission assembly from the engine.

CAUTION:
- **Secure transmission assembly to a suitable jack while removing it.**
- **The transmission assembly must not interfere with the three way catalyst (right bank) and three way catalyst (left bank).**
- **The transmission assembly must not interfere with the wire harnesses and clutch hose.**
- **The main drive gear must not interfere with the clutch cover.**
- **Never hold control lever housing to prevent the bushing of control lever housing from deformation when moving transmission assembly.**

20. Remove CSC body and CSC tube. Refer to CL-17, "Removal and Installation".
21. Remove dynamic damper. Refer to EM-224, "2WD : Removal and Installation".

INSTALLATION

Note the following, and install in the reverse order of removal.

CAUTION:

- **Secure transmission assembly to a suitable jack while installing it.**
- **The transmission assembly must not interfere with the three way catalyst (right bank) and three way catalyst (left bank).**
- **The transmission assembly must not interfere with the wire harnesses and clutch hose.**
- **The main drive gear must not interfere with the clutch cover.**
- **Never hold control lever housing to prevent the bushing of control lever housing from deformation when moving transmission assembly.**
- Tighten transmission assembly mounting bolts to the specified torque. The figure is the view from the vehicle forward.

Bolt symbol	A	B
Insertion direction	Transmission to engine	Engine to transmission
Number of bolts	8	4
Bolt length "ℓ" mm (in)	65 (2.56)	35 (1.38)
Tightening torque N·m (kg-m, ft-lb)	75 (7.7, 55)	46.6 (4.8, 34)

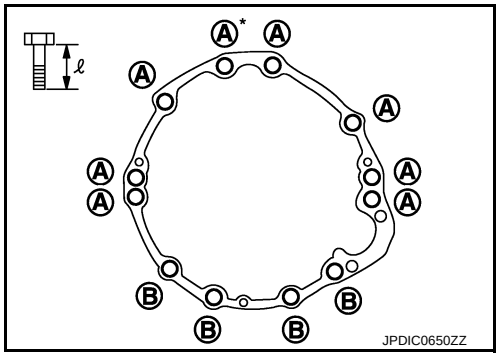

*: Tightening the bolt with air breather tube.

- If flywheel is removed, align dowel pin with the smallest hole of flywheel. Refer to EM-277, "Disassembly and Assembly".

Inspection

INFOID:0000000006207604

INSPECTION AFTER INSTALLATION

- Check the shift control. Refer to TM-25, "Inspection".
- Check the oil leakage and the oil level. Refer to TM-18, "Inspection".

UNIT DISASSEMBLY AND ASSEMBLY

TRANSMISSION ASSEMBLY

Exploded View

INFOID:0000000006207605

CASE AND EXTENSION

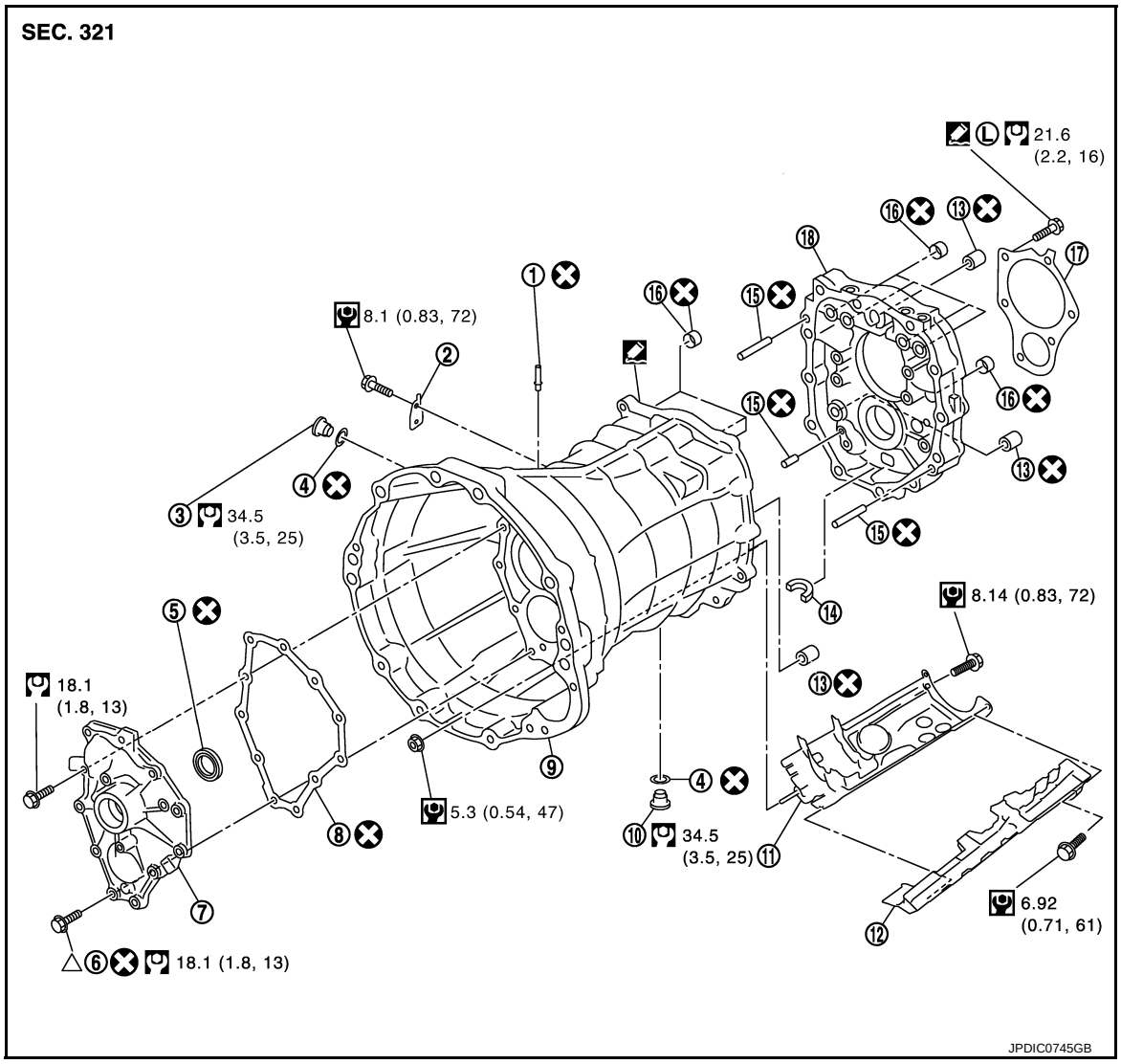

1. Breather tube	2. Bracket	3. Filler plug
4. Gasket	5. Front oil seal	6. Sealing bolt
7. Front cover	8. Front cover gasket	9. Transmission case
10. Drain plug	11. Baffle plate	12. Oil gutter
13. Sliding ball bearing	14. Magnet	15. Dowel pin
16. Bushing	17. Bearing retainer	18. Adapter plate

: Apply Genuine Silicone RTV or an equivalent. Refer to GI-22, "Recommended Chemical Products and Sealants".

Ⓛ: Apply Genuine Medium Strength Thread Locking Sealant or an equivalent. Refer to GI-22, "Recommended Chemical Products and Sealants".

△: Refer to "CASE AND EXTENSION" in TM-46, "Assembly" for the locations.

Refer to GI-4, "Components" for symbols not described on the above.

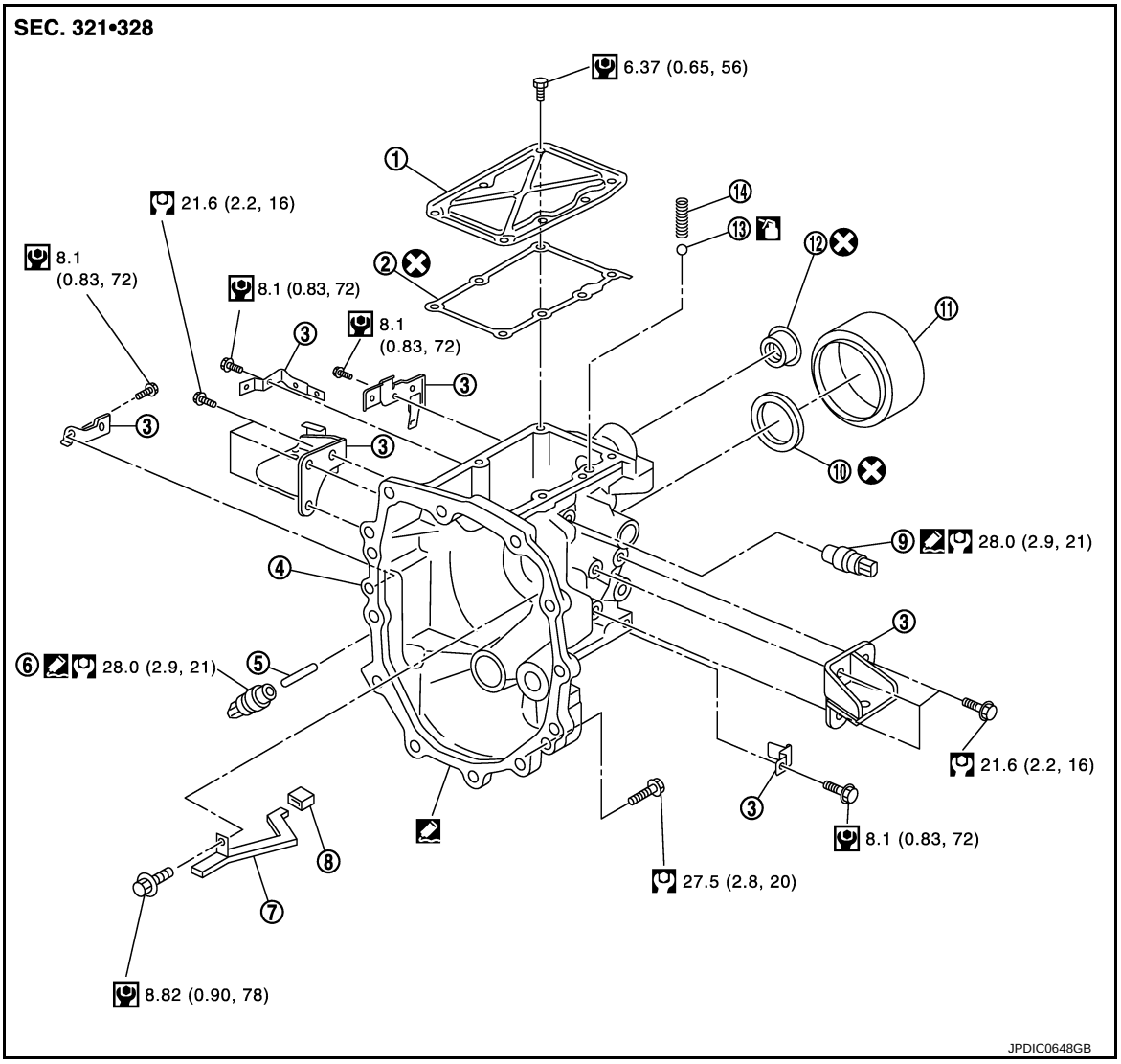

1. Rear extension upper cover
2. Rear extension upper cover gasket
3. Bracket
4. Rear extension
5. Plunger
6. Park/Neutral position (PNP) switch
7. Oil gutter
8. Cap
9. Back-up lamp switch
10. Rear oil seal
11. Dust cover
12. Striking rod oil seal
13. Check ball
14. Check select spring

: Apply gear oil.

: Apply Genuine Silicone RTV or an equivalent. Refer to GI-22, "Recommended Chemical Products and Sealants".

Refer to GI-4, "Components" for symbols not described on the above.

SHAFT AND GEAR

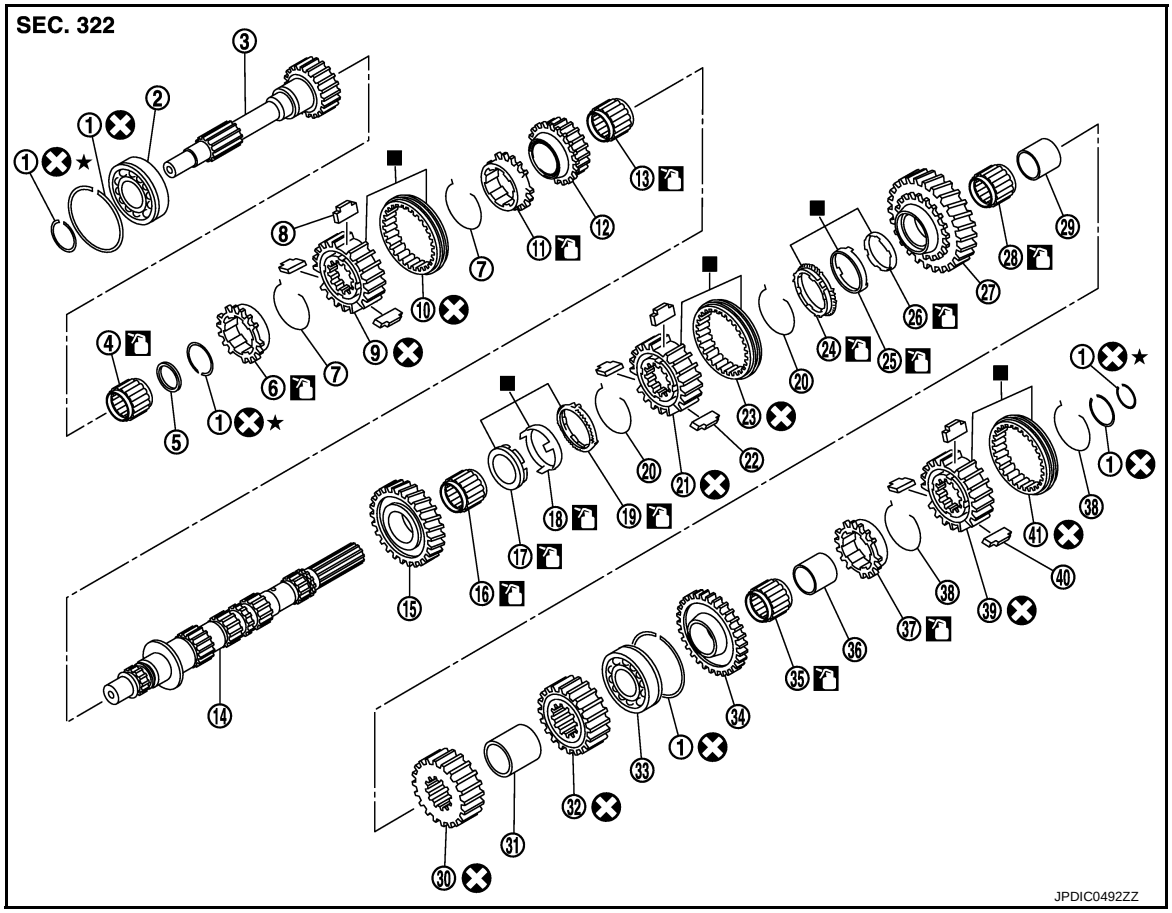

1. Snap ring
2. Main drive gear bearing
3. Main drive gear
4. Main pilot bearing
5. Pilot bearing spacer
6. 5th baulk ring
7. 5th-6th spread spring
8. 5th-6th shifting insert
9. 5th-6th synchronizer hub
10. 5th-6th coupling sleeve
11. 6th baulk ring
12. 6th main gear
13. 6th needle bearing
14. Mainshaft
15. 2nd main gear
16. 2nd needle bearing
17. 2nd inner baulk ring
18. 2nd synchronizer cone
19. 2nd outer baulk ring
20. 1st-2nd spread spring
21. 1st-2nd synchronizer hub
22. 1st-2nd shifting insert
23. 1st-2nd coupling sleeve
24. 1st outer baulk ring
25. 1st synchronizer cone
26. 1st inner baulk ring
27. 1st main gear
28. 1st needle bearing
29. 1st gear bushing
30. 3rd main gear
31. 3rd-4th main spacer
32. 4th main gear
33. Mainshaft bearing
34. Reverse main gear
35. Reverse needle bearing
36. Reverse main gear bushing
37. Reverse baulk ring
38. Reverse spread spring
39. Reverse synchronizer hub
40. Reverse shifting insert
41. Reverse coupling sleeve

■: Replace the parts as a set.

: Apply gear oil.

Refer to GI-4, "Components" for symbols not described on the above.

- Apply gear oil to gears, shafts, synchronizers, and bearings when assembling.

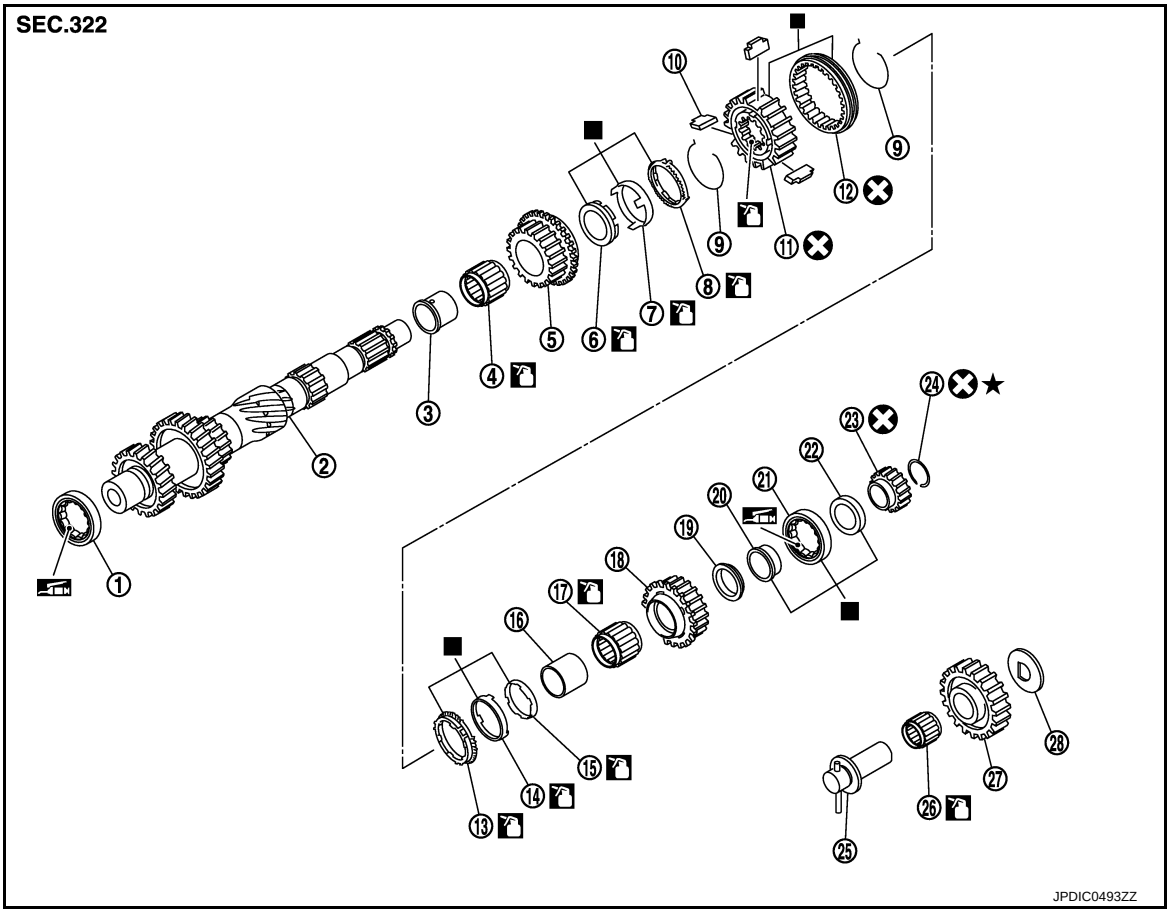

1. Counter front bearing
2. Counter shaft
3. 3rd gear bushing
4. 3rd needle bearing
5. 3rd counter gear
6. 3rd inner baulk ring
7. 3rd synchronizer cone
8. 3rd outer baulk ring
9. 3rd-4th spread spring
10. 3rd-4th shifting insert
11. 3rd-4th synchronizer hub
12. 3rd-4th coupling sleeve
13. 4th outer baulk ring
14. 4th synchronizer cone
15. 4th inner baulk ring
16. 4th gear bushing
17. 4th needle bearing
18. 4th counter gear
19. 4th counter gear thrust washer
20. Counter rear bearing inner race
21. Counter rear bearing
22. Counter rear bearing spacer
23. Reverse counter gear
24. Snap ring
25. Reverse idler shaft
26. Reverse idler needle bearing
27. Reverse idler gear
28. Reverse idler thrust washer

■: Replace the parts as a set.

: Apply gear oil.

: Apply lithium-based grease including molybdenum disulphide.

Refer to GI-4, "Components" for symbols not described on the above.

- Apply gear oil to gears, shafts, synchronizers, and bearings when assembling.

SHIFT FORK AND FORK ROD

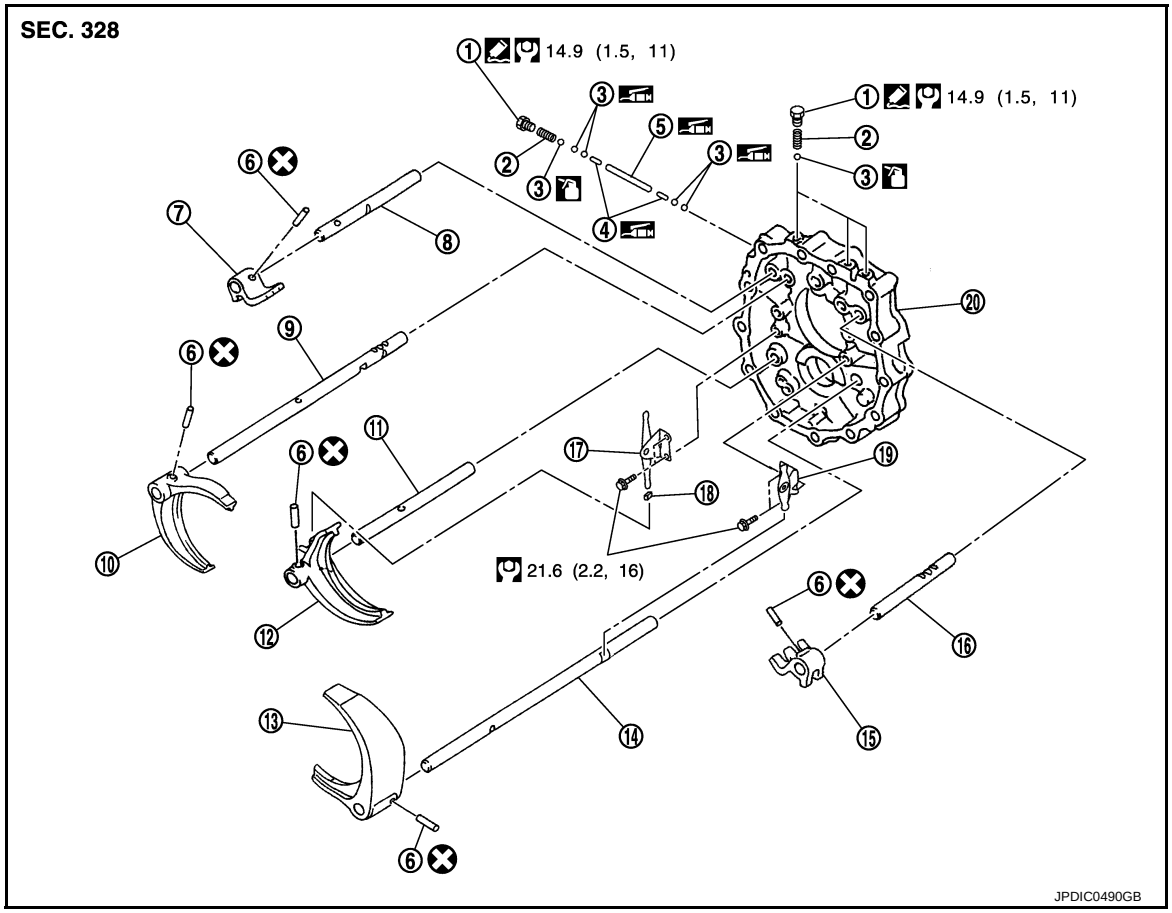

1. Check ball plug
2. Check ball spring
3. Check ball
4. Interlock pin
5. Interlock plunger
6. Retaining pin
7. 3rd-4th fork rod bracket
8. 3rd-4th fork rod
9. 1st-2nd fork rod
10. 1st-2nd shift fork
11. 3rd-4th fork rod (reversal side)
12. 3rd-4th shift fork
13. 5th-6th shift fork
14. 5th-6th fork rod (reversal side)
15. 5th-6th fork rod bracket
16. 5th-6th fork rod
17. 3rd-4th control lever
18. Shifter cap
19. 5th-6th control lever
20. Adapter plate

: Apply gear oil.

: Apply lithium-based grease including molybdenum disulphide.

: Apply Genuine Silicone RTV or an equivalent. Refer to GI-22, "Recommended Chemical Products and Sealants".

Refer to GI-4, "Components" for symbols not described on the above.

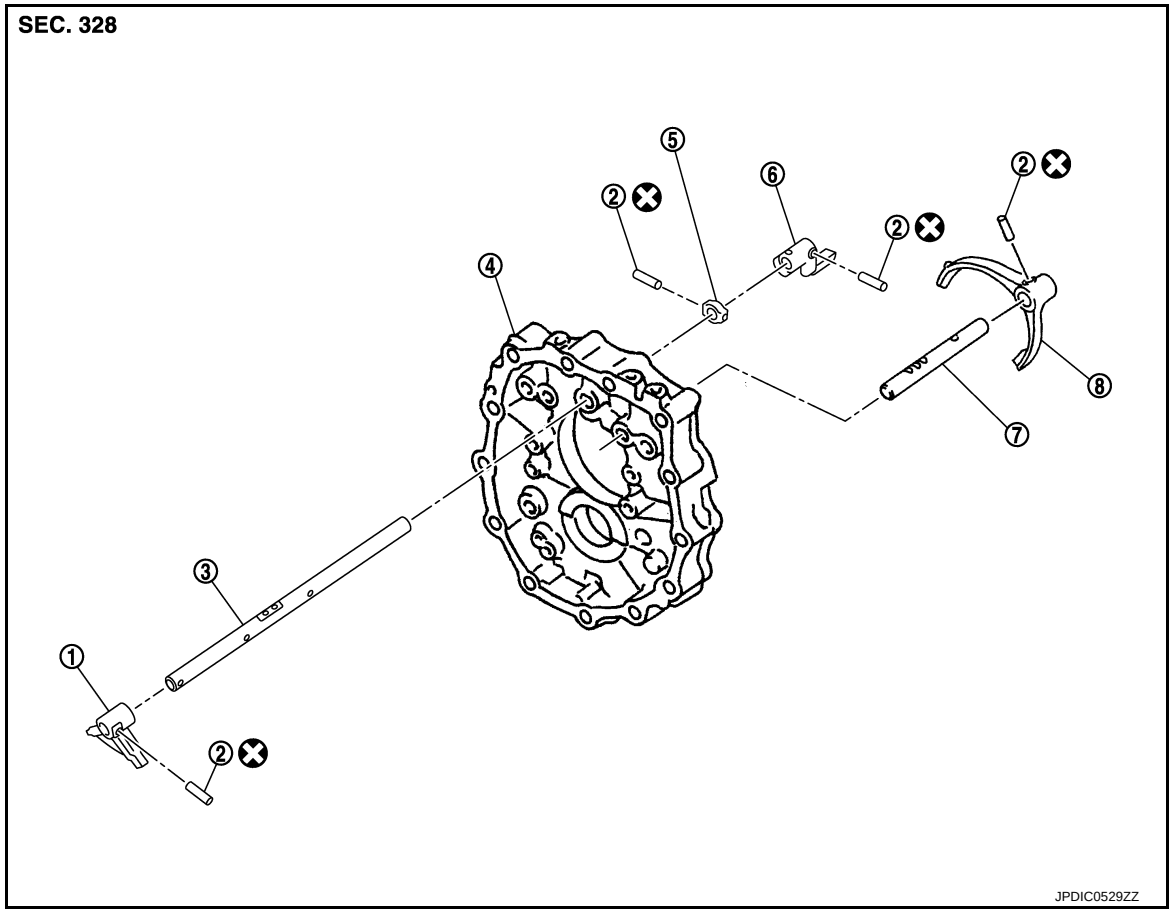

1. Striking lever
2. Retaining pin
3. Striking rod
4. Adapter plate
5. Stopper ring
6. Low/high control lever
7. Reverse fork rod
8. Reverse shift fork

Refer to GI-4, "Components" for the symbols in the figure.

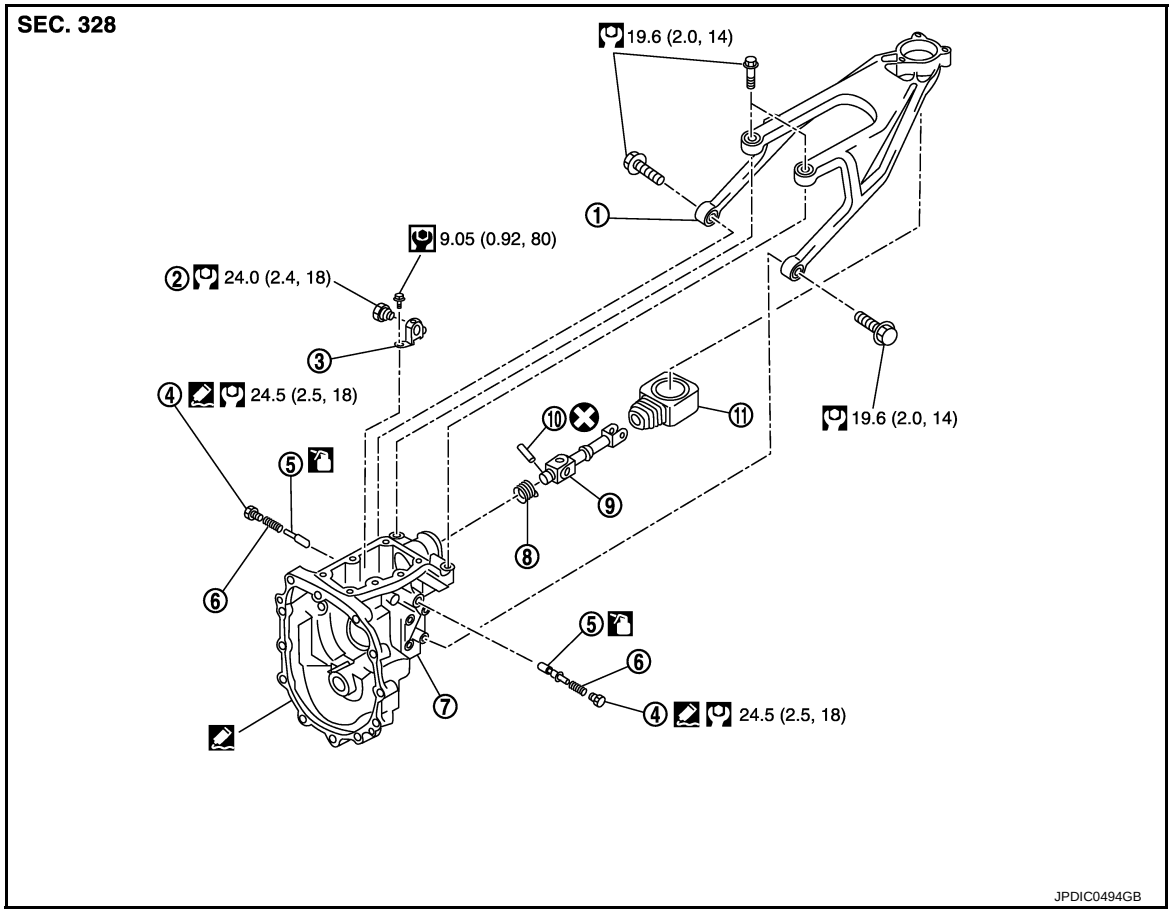

1. Control lever housing
2. Check shift pin
3. Control bracket
4. Return spring plug
5. Return spring plunger
6. Return spring
7. Rear extension
8. Boot
9. Control rod
10. Retaining pin
11. Control rod boot

: Apply gear oil.

: Apply Genuine Silicone RTV or an equivalent. Refer to GI-22, "Recommended Chemical Products and Sealants".

Refer to GI-4, "Components" for symbols not described on the above.

Disassembly

INFOID:0000000006207606

CASE AND EXTENSION

1. Remove drain plug and gasket from transmission case and then drain gear oil.
2. Remove filler plug and gasket from transmission case.
3. Remove rear extension upper cover with the following procedure.

a. Remove rear extension upper cover mounting bolts while holding rear extension upper cover.
b. Remove rear extension upper cover and rear extension upper cover gasket from rear extension.

4. Remove check select spring and check ball from rear extension.
CAUTION:
Never drop check ball.
5. Remove control rod with the following procedure.
a. Remove control rod boot from control rod.

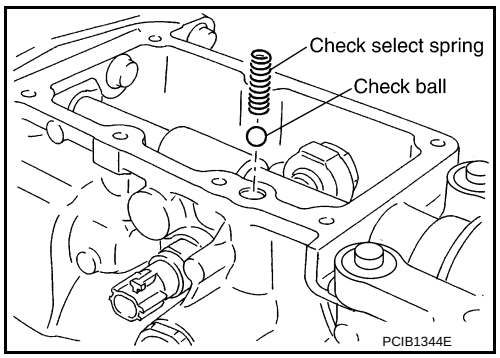

b. Remove boot (1) from control rod as shown in the figure.
c. Remove retaining pin (⬅) from control rod using a pin punch [Commercial service tool] and then remove control rod from striking rod.
d. Remove boot from striking rod oil seal.
6. Remove park/neutral position (PNP) switch and plunger from rear extension.
7. Remove back-up lamp switch from rear extension.

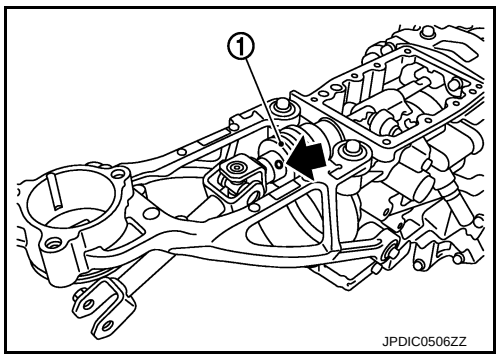

8. Remove mounting bolts (⬅) and then remove control bracket from rear extension.

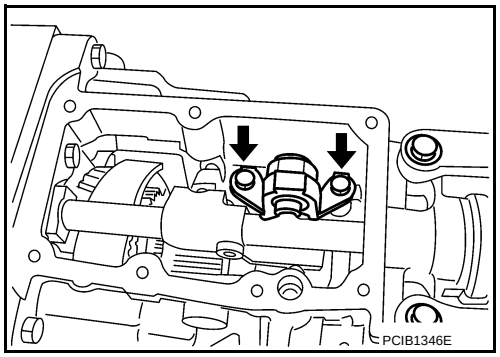

9. Remove return spring plungers (1), return springs (2), and return spring plugs (3) from rear extension.
CAUTION:
Return spring and return spring plunger have different lengths for right and left sides. Identify right and left side and then store.

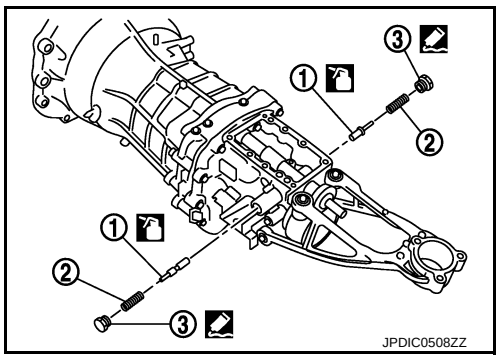

10. Remove rear oil seal from rear extension using the puller [SST: KV381054S0 (J-34286)].
CAUTION:
Never damage rear extension.
11. Remove brackets from rear extension.
12. Remove control lever housing from rear extension.
CAUTION:
Never hold control lever housing to prevent the bushing of control lever housing from deformation when moving transmission assembly.
13. Remove rear extension from adapter plate using a soft hammer.

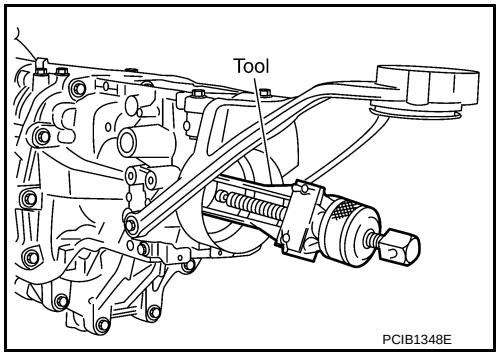

CAUTION:
Never drop reverse idler thrust washer.

14. Remove striking rod oil seal from rear extension.
CAUTION:
Never damage rear extension.
15. Remove dust cover from rear extension.
CAUTION:
Never damage rear extension.
16. Remove oil gutter with the following procedure.

a. Remove oil gutter from rear extension.
b. Remove cap from oil gutter.

17. Remove reverse idler shaft assembly (⬅) from adapter plate.

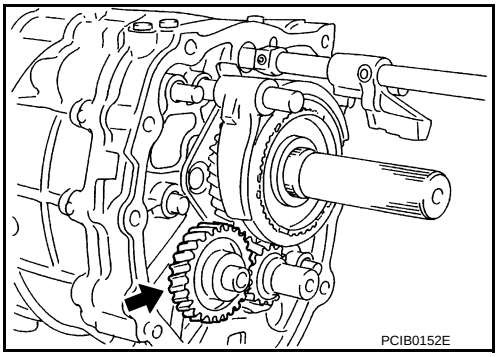

18. Remove front cover with the following procedure.

a. Remove mounting bolts (⬅) and sealing bolts (1).
b. Remove front cover and front cover gasket from transmission case.

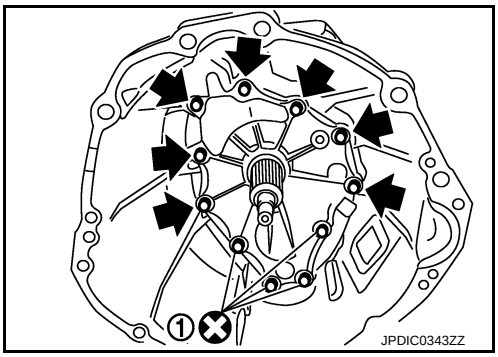

c. Remove front oil seal from front cover using a flat-bladed screwdriver.
CAUTION:
Never damage front cover.

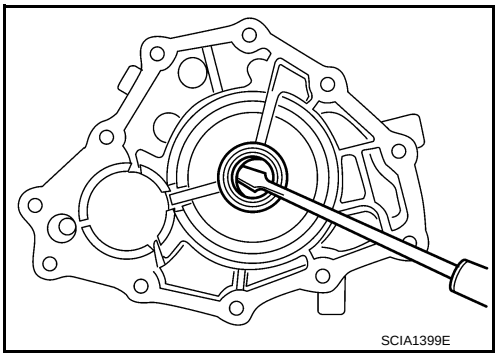

19. Remove transmission case with the following procedure.

a. Remove baffle plate mounting nut (⬅) from transmission case.

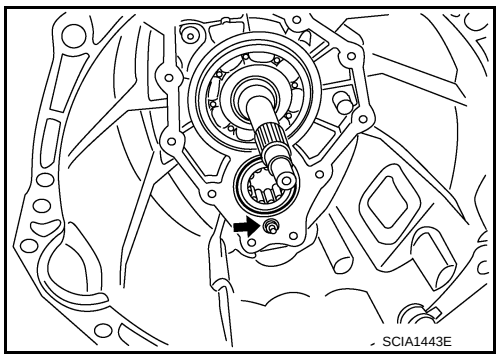

b. Remove snap ring from main drive gear bearing using snap ring pliers.

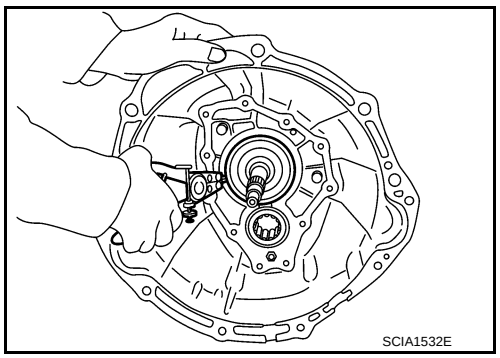

c. Carefully tap transmission case using a soft hammer (A) and then separate adapter plate and transmission case.
CAUTION:
Never drop counter front bearing.

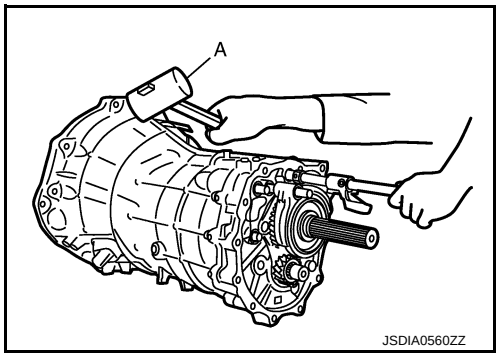

20. Remove counter front bearing (1) from transmission case.
21. Remove breather tube from transmission case.
CAUTION:
Never damage transmission case.
22. Remove bracket from transmission case.

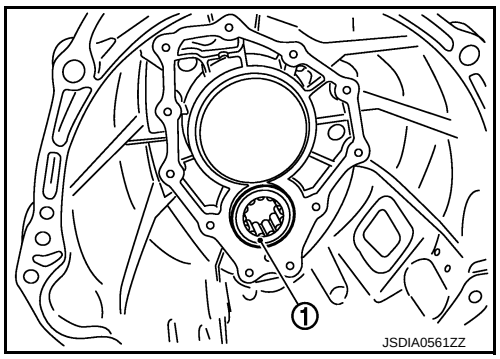

SHIFT FORK AND FORK ROD

1. Install adapter setting plate (A) [SST: ST22490000 (-)] to adapter plate and then fixing in adapter setting plate [SST: ST22490000 (-)] using a vise.
   CAUTION:
   Never directly secure the surface in a vise.
2. Remove baffle plate and oil gutter from adapter plate.
3. Remove magnet from adapter plate.

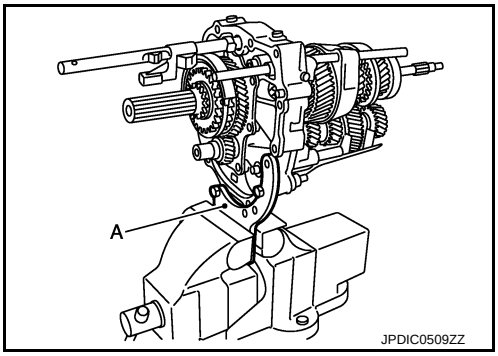

4. Remove check balls (1), check ball springs (2), and check ball plugs (3) from adapter plate.
   CAUTION:
   Never drop check ball.

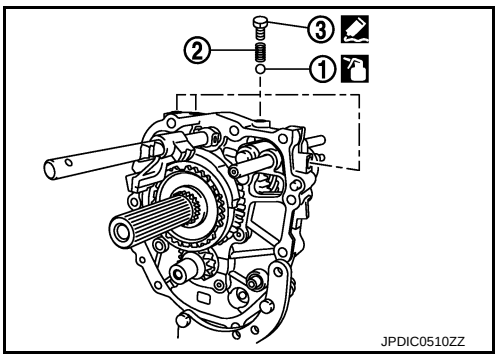

5. Remove 3rd-4th control lever (1) and shifter cap (2) from adapter plate.
   CAUTION:
   Never lose shifter cap.

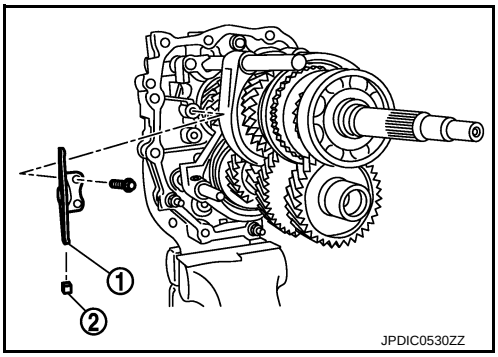

6. Remove retaining pin (⬅) using a pin punch [Commercial service tool] and then remove striking lever (1) and striking rod (2).

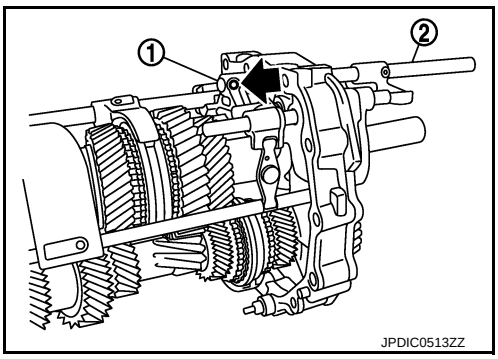

7. Remove retaining pin (⬅) using a pin punch [Commercial service tool] and then remove 3rd-4th shift fork (1) and 3rd-4th fork rod (reversal side) (2).

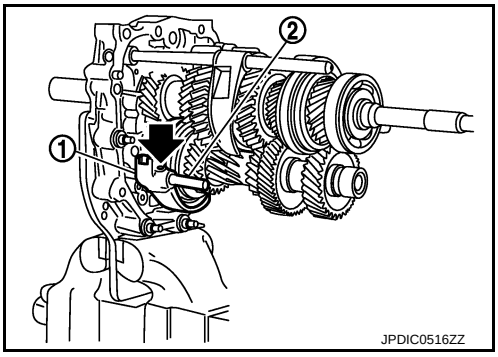

8. Remove retaining pin (⬅) using a pin punch [Commercial service tool] and then remove 3rd-4th fork rod (1) and 3rd-4th fork rod bracket (2).

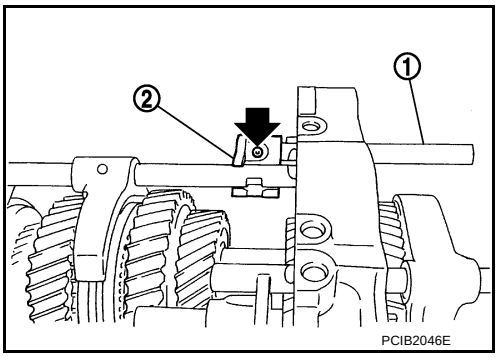

9. Remove check balls (1) from adapter plate.

A : View from transmission rear side

CAUTION:
Never drop check ball.

10. Remove interlock pin (2) from 1st-2nd fork rod.

CAUTION:
Never drop interlock pin.

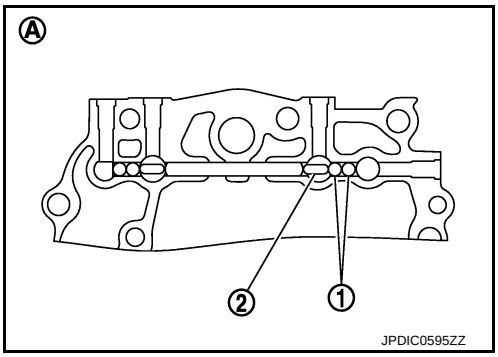

11. Remove retaining pin (⬅) using a pin punch [Commercial service tool] and then remove 1st-2nd shift fork (1) and 1st-2nd fork rod (2).

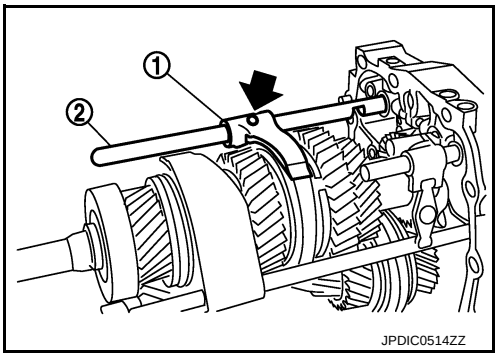

12. Remove interlock plunger (1) from adapter plate.

A : View from transmission rear side

13. Remove interlock pin (2) from reverse fork rod.

CAUTION:
Never drop interlock pin.

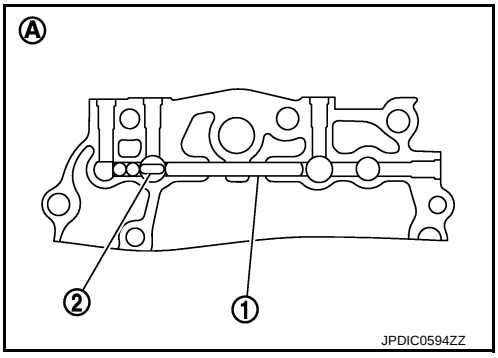

14. Remove retaining pin (⬅) using a pin punch [Commercial service tool] and then remove reverse shift fork (1) and reverse fork rod (2).

CAUTION:
Never drop reverse coupling sleeve.

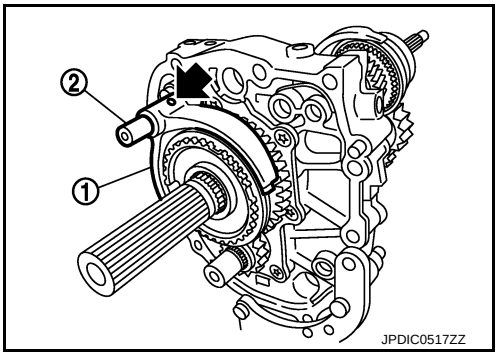

15. Remove check balls (1) from adapter plate.

A : View from transmission rear side

CAUTION:
Never drop check ball.

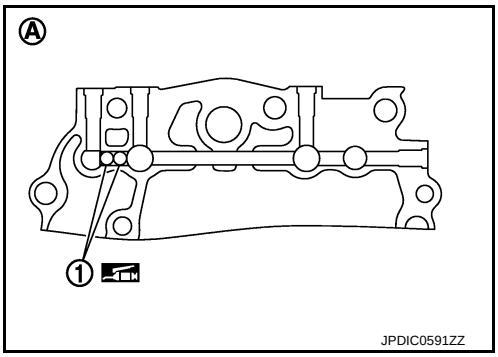

16. Remove retaining pin (⬅) using a pin punch [Commercial service tool] and then remove 5th-6th fork rod bracket (1) and 5th-6th fork rod (2).

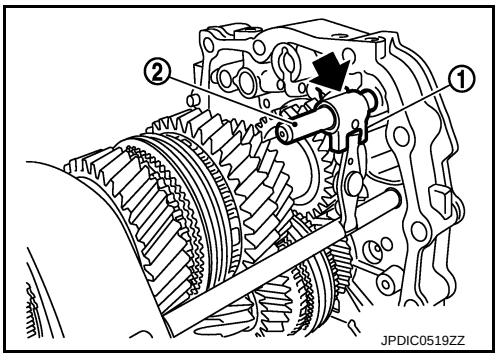

17. Remove 5th-6th control lever from adapter plate.

A : Projection

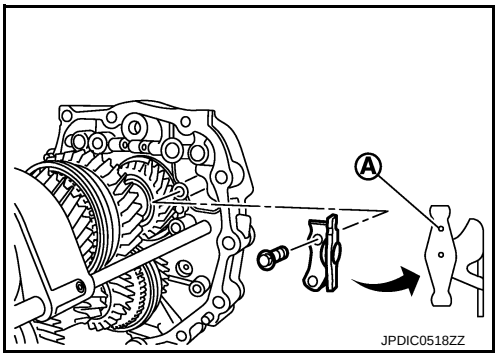

18. Remove retaining pin (⬅) using a pin punch [Commercial service tool] and then remove 5th-6th shift fork (1) and 5th-6th fork rod (reversal side) (2).

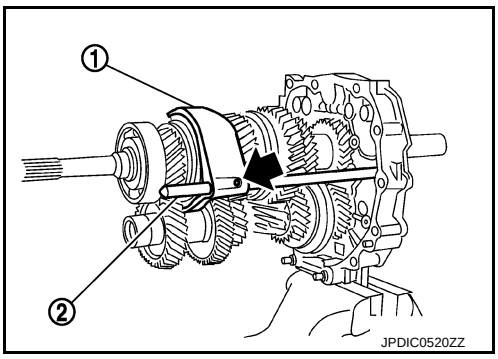

SHAFT AND GEAR

1. Remove reverse synchronizer hub with the following procedure.

a. Remove snap ring from mainshaft.

b. Remove snap ring from reverse synchronizer hub.

c. Remove reverse spread spring, reverse shifting inserts, and reverse coupling sleeve from reverse synchronizer hub.

d. Set a puller [Commercial service tool] to reverse main gear.
e. Remove reverse synchronizer hub together with reverse main gear, reverse baulk ring, and reverse spread spring from mainshaft using a puller [Commercial service tool].
2. Remove reverse needle bearing from mainshaft.
3. Remove reverse counter gear with the following procedure.
a. Remove snap ring from counter shaft.

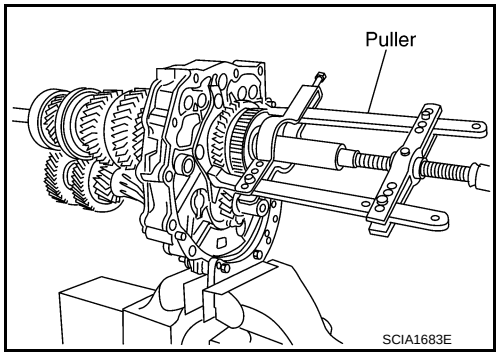

b. Remove reverse counter gear from counter shaft using a puller [Commercial service tool].
4. Remove counter rear bearing spacer from counter shaft.

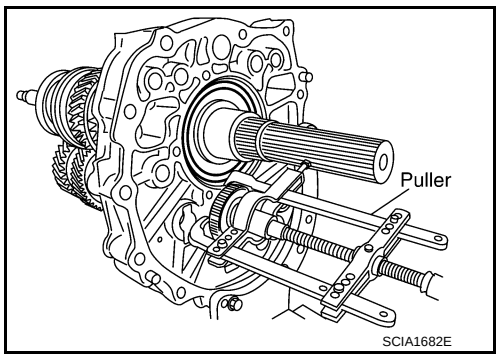

5. Remove mounting bolts (⬅) and then remove bearing retainer from adapter plate.

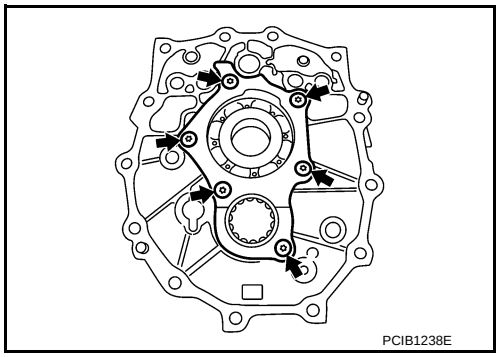

6. Remove snap ring from mainshaft bearing.

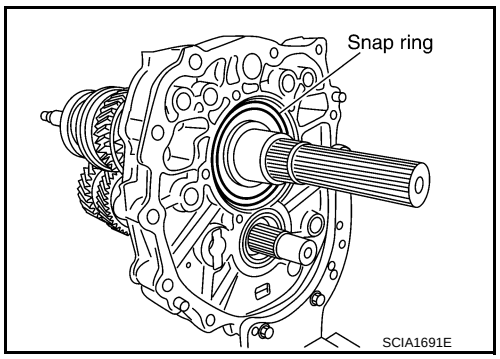

7. Carefully tap mainshaft with a plastic hammer and then remove mainshaft assembly, main drive gear assembly, and counter shaft assembly combined in one unit from adapter plate.

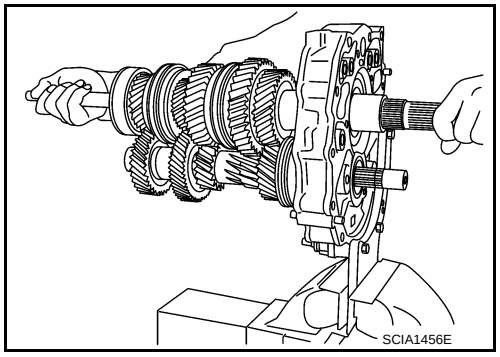

8. Remove counter rear bearing (1) from adapter plate.
9. Remove adapter plate from adapter setting plate [SST: ST22490000 (-)].

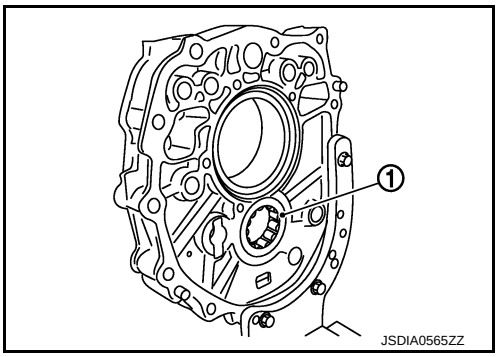

Assembly

INFOID:0000000006207607

SHAFT AND GEAR

1. Install main drive gear assembly, mainshaft assembly, and counter shaft assembly combined in one unit to adapter plate using a brass bar.

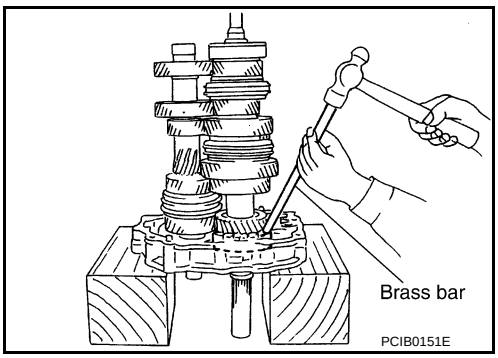

2. Install the adapter setting plate [SST] to adapter plate and then fixing in adapter setting plate [SST] using a vise.
   CAUTION:
   Never directly secure the surface in a vise.

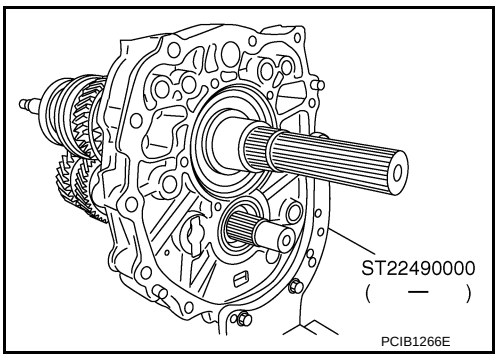

3. Install snap ring to mainshaft bearing.
   CAUTION:
   Never reuse snap ring.
4. Apply recommended grease to roller of counter rear bearing.

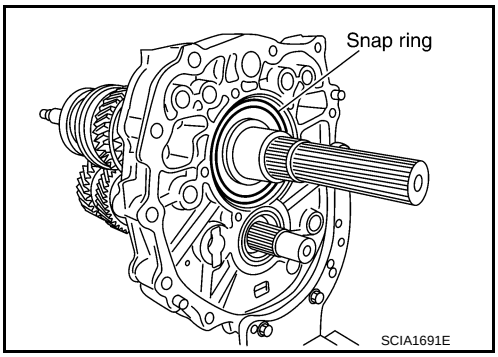

5. Install counter rear bearing to adapter plate using the drift [SST].

CAUTION:

Replace counter rear bearing inner race, counter rear bearing, and counter rear bearing spacer as a set.

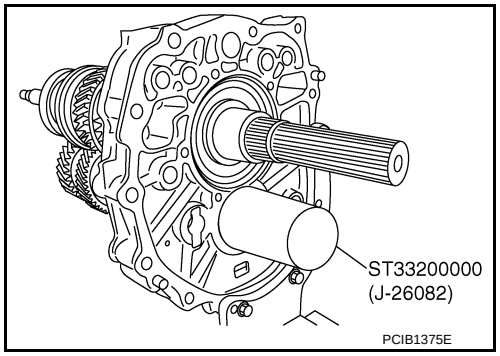

6. Install bearing retainer with the following procedure.

a. Apply thread locking sealant to the end of bearing retainer mounting bolts (first 3 to 4 threads).

- **Use Genuine Medium Strength Thread Locking Sealant or an equivalent. Refer to GI-22, "Recommended Chemical Products and Sealants".**

CAUTION:

Remove old sealant and oil adhering to threads.

b. Install bearing retainer to adapter plate and then tighten mounting bolts (⬅) to the specified torque.

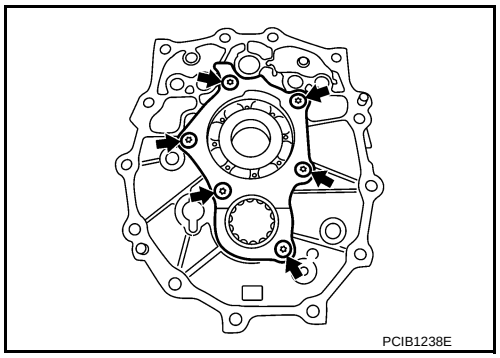

7. Install reverse synchronizer hub with the following procedure.

a. Install reverse coupling sleeve and reverse shifting inserts to reverse synchronizer hub.

CAUTION:

- **Be careful with the orientation of reverse coupling sleeve.**

⇦ : Reverse main gear side

- **Never reuse reverse coupling sleeve and reverse synchronizer hub.**
- **Replace reverse coupling sleeve and reverse synchronizer hub as a set.**

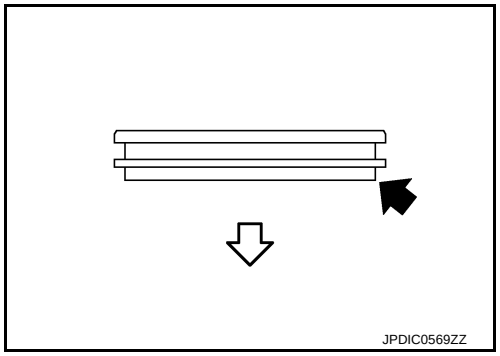

- **Be careful with the orientation of reverse synchronizer hub.**

A : Reverse main gear side
B : Snap ring side

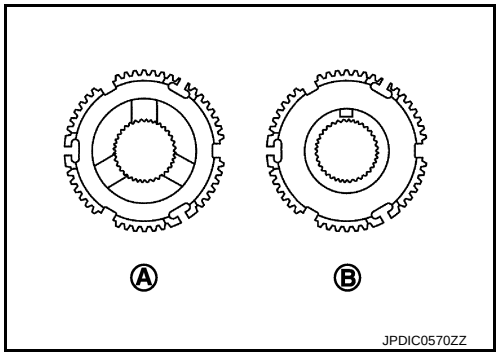

- **Be careful with the shape of reverse shifting insert.**

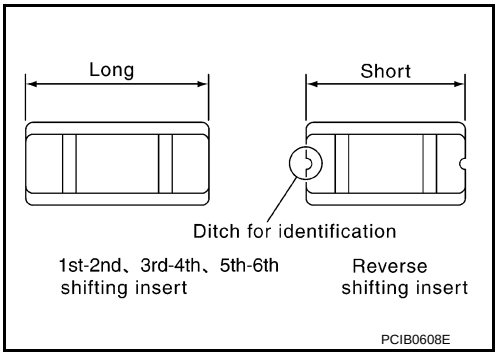

b. Install reverse spread springs to reverse shifting inserts.

CAUTION:

Never install reverse spread spring hook onto the same reverse shifting insert.

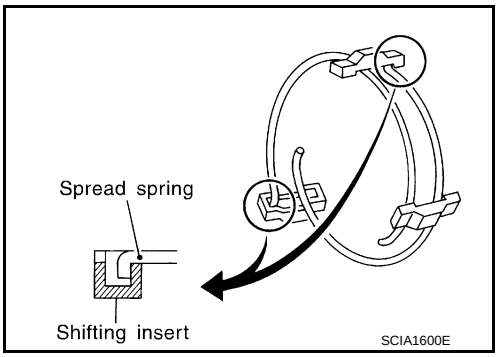

c. Install snap ring to reverse synchronizer hub.

CAUTION:

- **Never reuse snap ring.**
- **Never align snap ring notch (⬅) with synchronizer hub groove when assembling.**

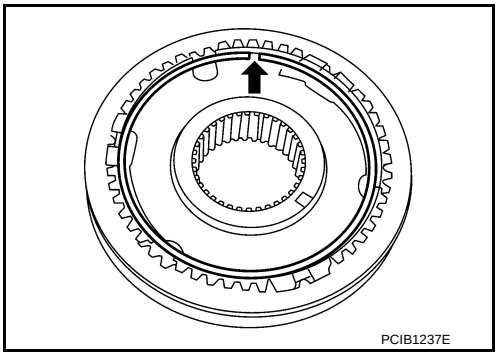

8. Install reverse synchronizer hub assembly (1) with the following procedure.

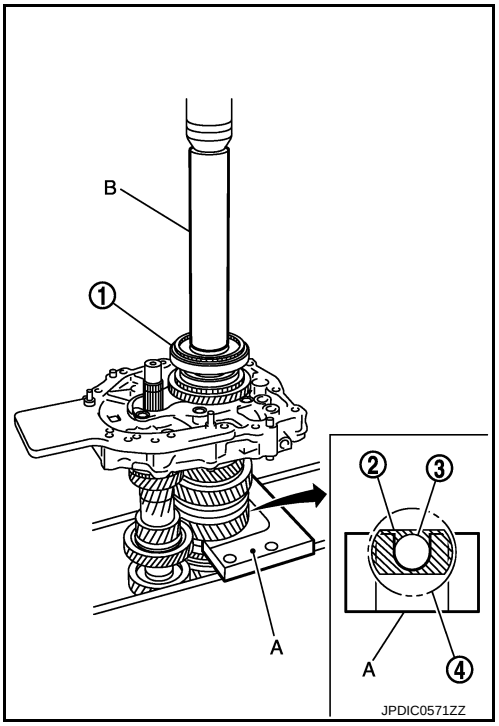

2 : Collar of mainshaft
3 : 6th main gear
4 : 2nd main gear
B : Drift [SST: ST01530000 (-)]

a. Set the press plate (A) [SST: KV32103300 (J-46529)] to mainshaft as shown in the figure.
b. Apply gear oil to reverse needle bearing and reverse baulk ring.
c. Install reverse needle bearing, reverse main gear, and reverse baulk ring to mainshaft.

NOTE:
Reverse baulk ring has three spaces that two gear teeth are missing, and each space has small ditch for identification as shown in the figure.

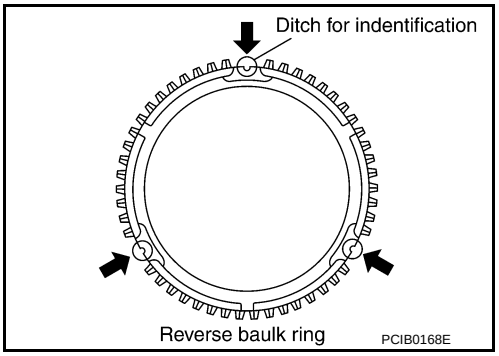

d. Install reverse synchronizer hub assembly to mainshaft with a pressing machine using the drift [SST: ST01530000 (-)].

CAUTION:
Be careful with the orientation of reverse coupling sleeve.

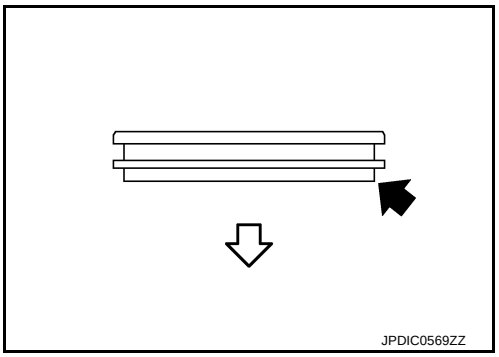

⇦ : Reverse main gear side

9. Select and install snap ring (1) so that the end play “L” of main-shaft is adjusted to the standard value. For selecting snap ring, refer to the latest parts information.

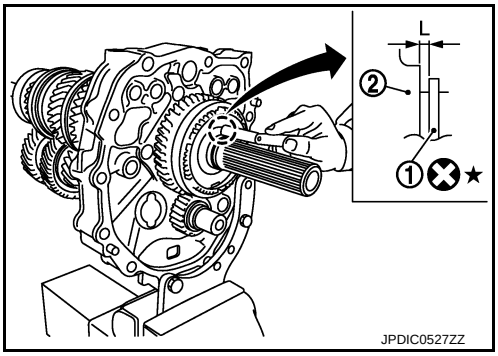

2 : Reverse synchronizer hub

End play “L” : Refer to TM-95, "End Play".

10. Install reverse counter gear with the following procedure.

a. Install counter rear bearing spacer to counter shaft.

CAUTION:

- **Be careful with the orientation of counter rear bearing spacer.**

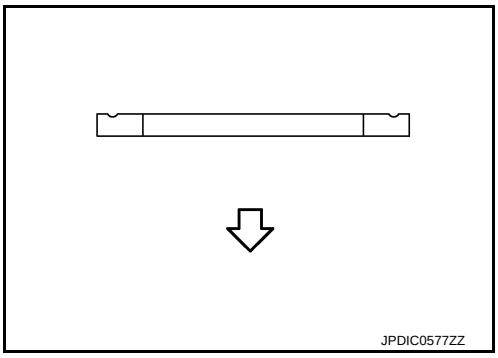

⇦ : Counter rear bearing side

- **Replace counter rear bearing inner race, counter rear bearing, and counter rear bearing spacer as a set.**

b. Install reverse counter gear (1) to counter shaft with a pressing machine using the drift (A) [SST: ST23860000 (-)].

CAUTION:

- **Never reuse reverse counter gear.**

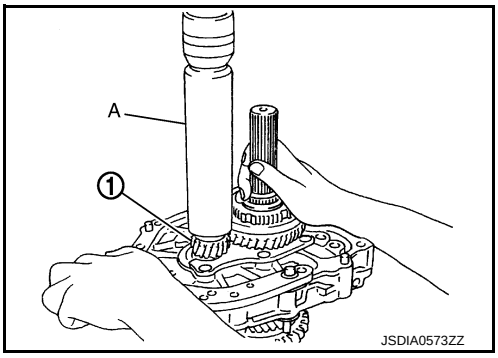

- **Be careful with the orientation of reverse counter gear.**

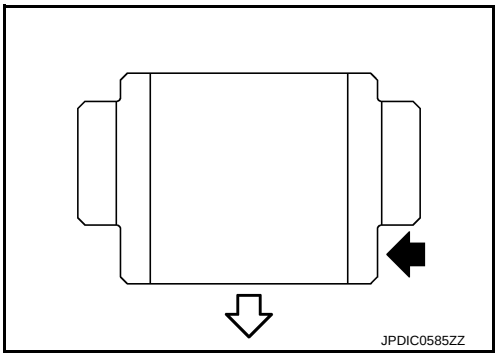

⇦ : Counter rear bearing side

11. Select and install snap ring (1) so that the end play “L” of counter shaft is adjusted to the standard value. For selecting snap ring, refer to the latest parts information.

    2 : Reverse counter gear

    End play “L” : Refer to TM-95, "End Play".

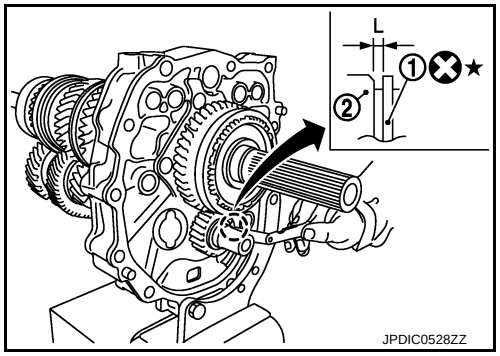

SHIFT FORK AND FORK ROD

1. Install 5th-6th shift fork (1) and 5th-6th fork rod (reversal side) (2) and then install retaining pin (⬅) to 5th-6th shift fork using a pin punch [Commercial service tool].

   CAUTION:
   - **Never reuse retaining pin.**
   - **Be careful with the orientation of 5th-6th shift fork and 5th-6th fork rod (reversal side).**
   - **Assemble retaining pin from the direction shown by the arrow in the figure until it becomes flush with the end surface of 5th-6th shift fork.**

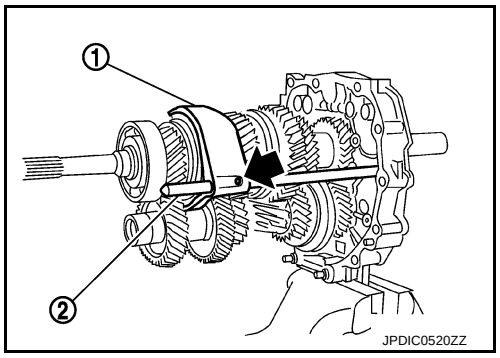

2. Install 5th-6th control lever to adapter plate and then tighten mounting bolts to the specified torque.

   CAUTION:
   Set the projection (A) upward.

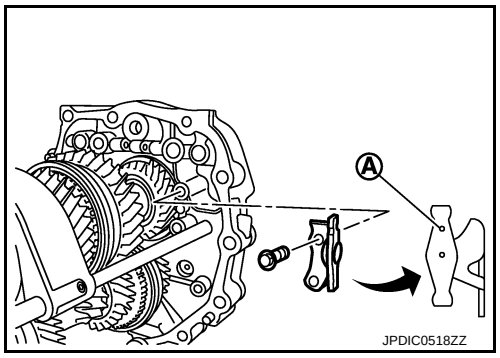

3. Install 5th-6th fork rod bracket (1) and 5th-6th fork rod (2) and then install retaining pin (⬅) to 5th-6th fork rod bracket using a pin punch [Commercial service tool].

   CAUTION:
   - **Never reuse retaining pin.**
   - **Be careful with the orientation of 5th-6th fork rod bracket and 5th-6th fork rod.**
   - **Assemble retaining pin from the direction shown by the arrow in the figure until it becomes flush with the end surface of 5th-6th fork rod bracket.**

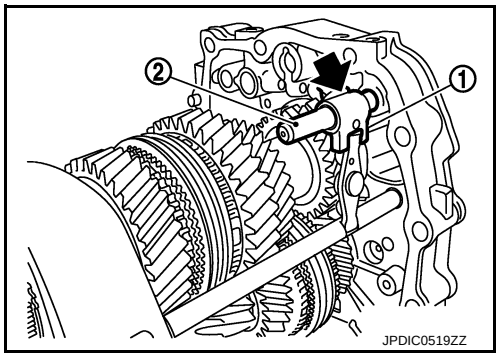

4. Apply recommended grease to check balls (1) and then install its to adapter plate.

A : View from transmission rear side

CAUTION:
Never drop check ball.

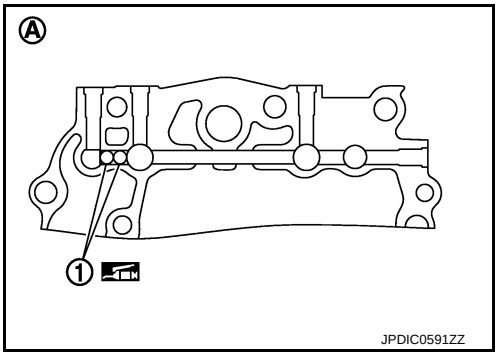

JPDIC0591ZZ

5. Apply recommended grease to interlock pin and then install it to reverse fork rod.

CAUTION:
Never drop interlock pin.

6. Install reverse shift fork (1) and reverse fork rod (2) and then install retaining pin (⬅) to reverse shift fork using a pin punch [Commercial service tool].

CAUTION:
- **Never reuse retaining pin.**
- **Be careful with the orientation of reverse shift fork and reverse fork rod.**
- **Assemble retaining pin from the direction shown by the arrow in the figure until it becomes flush with the end surface of reverse shift fork.**
- **Never drop reverse coupling sleeve.**

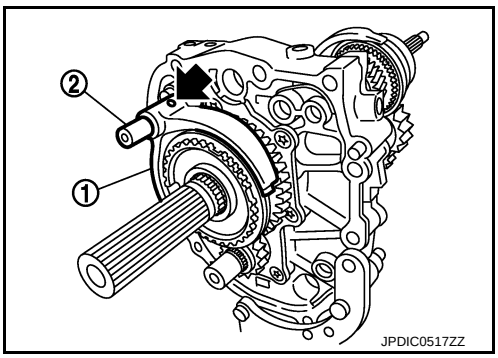

JPDIC0517ZZ

7. Apply recommended grease to interlock plunger (1) and then install it to adapter plate.

A : View from transmission rear side

8. Apply recommended grease to interlock pin and then install it to 1st-2nd fork rod.

CAUTION:
Never drop interlock pin.

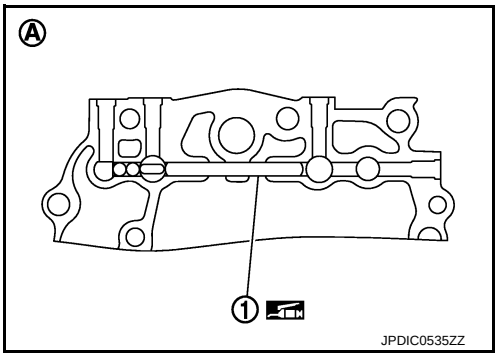

JPDIC0535ZZ

9. Install 1st-2nd shift fork (1) and 1st-2nd fork rod (2) and then install retaining pin (⬅) to 1st-2nd shift fork using a pin punch [Commercial service tool].

CAUTION:
- **Never reuse retaining pin.**
- **Be careful with the orientation of 1st-2nd shift fork and 1st-2nd fork rod.**
- **Assemble retaining pin from the direction shown by the arrow in the figure until it becomes flush with the end surface of 1st-2nd shift fork.**

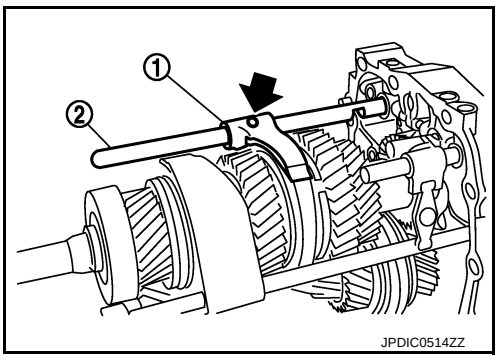

JPDIC0514ZZ

10. Apply recommended grease to check balls (1) and then install its to adapter plate.

A : View from transmission rear side

CAUTION:
Never drop check ball.

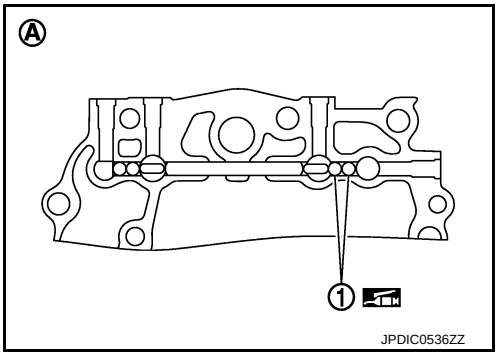

JPDIC0536ZZ

11. Install 3rd-4th fork rod bracket (1) and 3rd-4th fork rod (2) and then install retaining pin (⬅) to 3rd-4th fork rod bracket using a pin punch [Commercial service tool].

CAUTION:
- **Never reuse retaining pin.**
- **Be careful with the orientation of 3rd-4th fork rod bracket.**
- **Assemble retaining pin from the direction shown by the arrow in the figure until it becomes flush with the end surface of 3rd-4th fork rod bracket.**

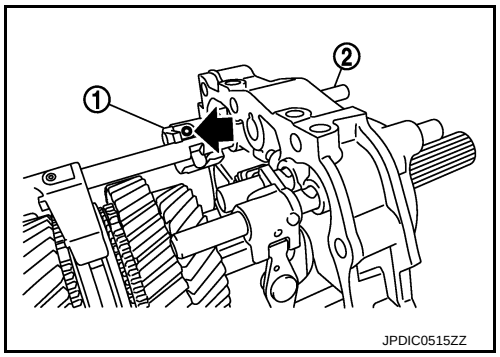

- **Be careful with the orientation of 3rd-4th fork rod.**

⇦ : Transmission front
A : View from transmission top side

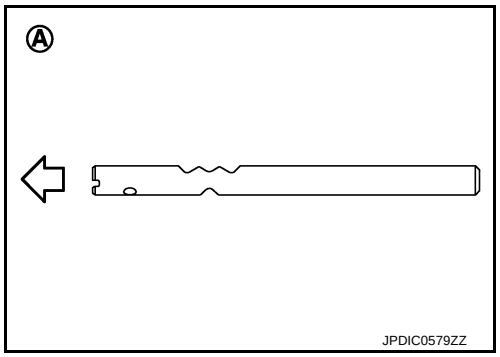

12. Install 3rd-4th shift fork (1) and 3rd-4th fork rod (reversal side) (2) and then install retaining pin (⬅) to 3rd-4th shift fork using a pin punch [Commercial service tool].

CAUTION:
- **Never reuse retaining pin.**
- **Be careful with the orientation of 3rd-4th shift fork.**
- **Assemble retaining pin from the direction shown by the arrow in the figure until it becomes flush with the end surface of 3rd-4th shift fork.**

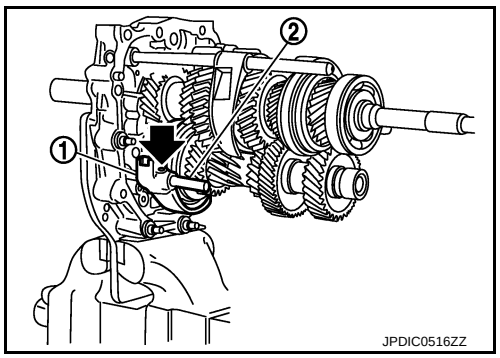

- **Be careful with the orientation of 3rd-4th fork rod (reversal side).**

⇦ : Transmission front
A : Short
B : Long

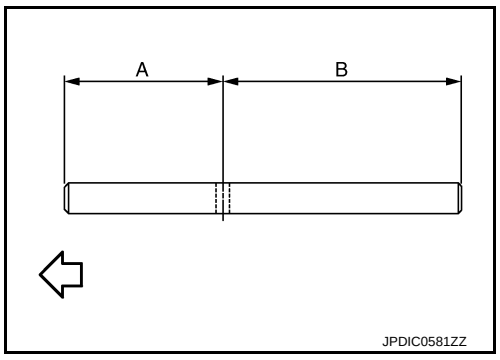

13. Install 3rd-4th control lever (1) and shifter cap (2) to adapter plate and then tighten mounting bolts to the specified torque.

CAUTION:
- **Be careful with the orientation of 3rd-4th control lever.**
- **Never lose shifter cap.**

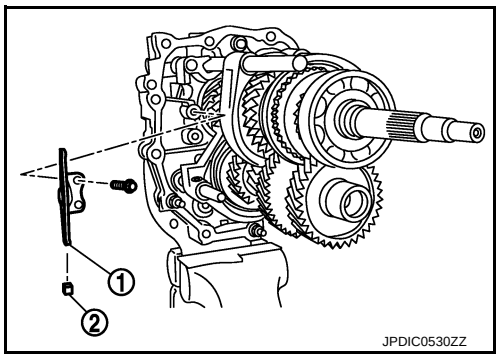

14. Install striking lever (1) and striking rod (2) and then install retaining pin (⬅) to striking lever using a pin punch [Commercial service tool].

CAUTION:

- **Never reuse retaining pin.**
- **Be careful with the orientation of striking lever and striking rod.**
- **Assemble retaining pin from the direction shown by the arrow in the figure until it becomes flush with the end surface of striking lever.**

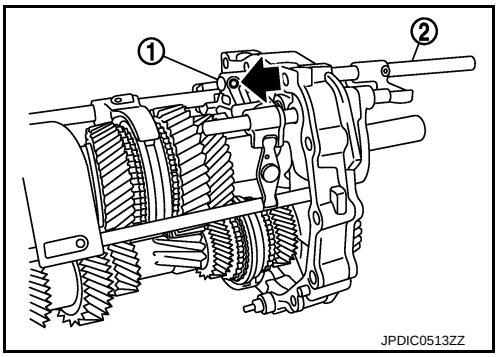

15. Apply gear oil to check balls (1) and then install check balls and check ball springs (2) to adapter plate.

CAUTION:

Never drop check ball.

16. Apply recommended sealant to threads of check ball plugs (3) and then tighten its to the specified torque.

- **Use Genuine Silicone RTV or an equivalent. Refer to GI-22, "Recommended Chemical Products and Sealants".**

CAUTION:

Remove old sealant and oil adhering to threads.

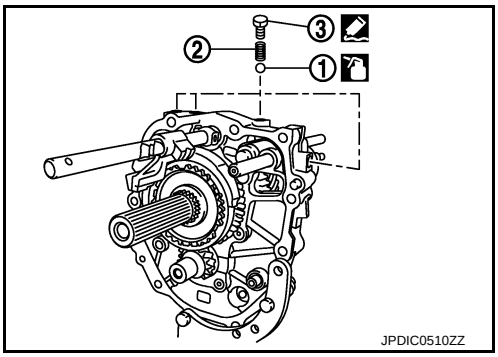

17. Install baffle plate with the following procedure.

a. Insert baffle plate (1) until its projection contacts groove (A) of oil gutter (2).

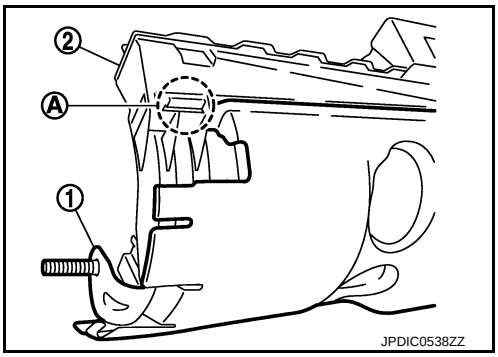

b. Align baffle plate hole to adapter plate dowel pin (⬅).

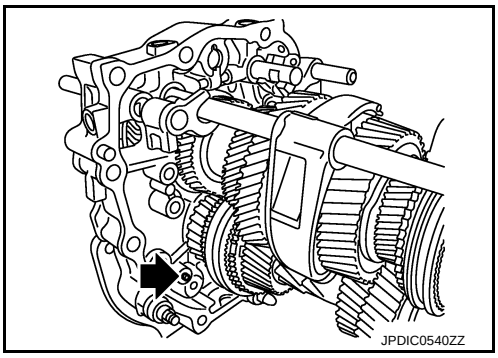

c. Install mounting bolt (⬅) to adapter plate and then tighten mounting bolt to the specified torque.

18. Remove adapter plate assembly from vise.
CAUTION:
Never damage baffle plate.

19. Remove adapter setting plate [SST: ST22490000 (-)] from adapter plate.

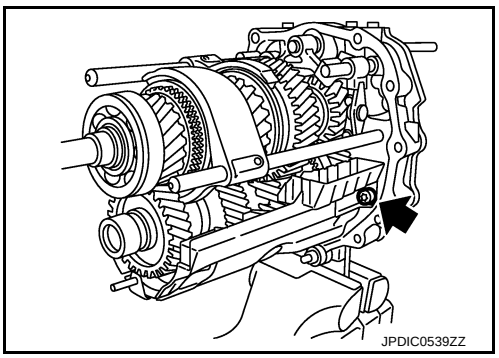

CASE AND EXTENSION

1. Install breather tube (1) to transmission case.

Dimension “L” : 2 mm (0.08 in) or less

CAUTION:
Never bend breather tube.

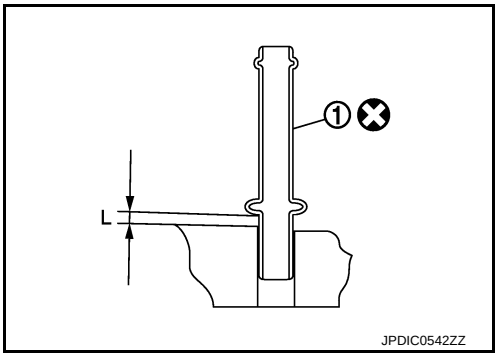

2. Install transmission case with the following procedure.

a. Install counter front bearing (1) to transmission case.

b. Apply recommended grease to roller of counter front bearing.

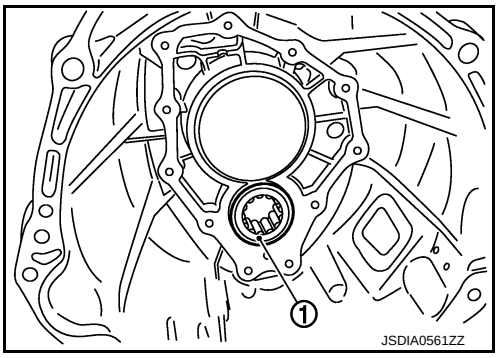

c. Apply recommended sealant to mating surface of transmission case as shown in the figure.

A : Start and finish point shall be in the center of two bolts.

Dimension "B" : 3 – 5 mm (0.12 – 0.20 in)
Sealant width "C" : 1 – 2 mm (0.04 – 0.08 in)
Sealant height "C" : 0.4 – 1 mm (0.016 – 0.04 in)

- **Use Genuine Silicone RTV or an equivalent. Refer to GI-22, "Recommended Chemical Products and Sealants".**

CAUTION:
- **Remove old sealant adhering to the mounting surfaces. Also remove any moisture, oil, or foreign material adhering to both mounting surfaces.**
- **Apply sealant so as not to break the bead.**

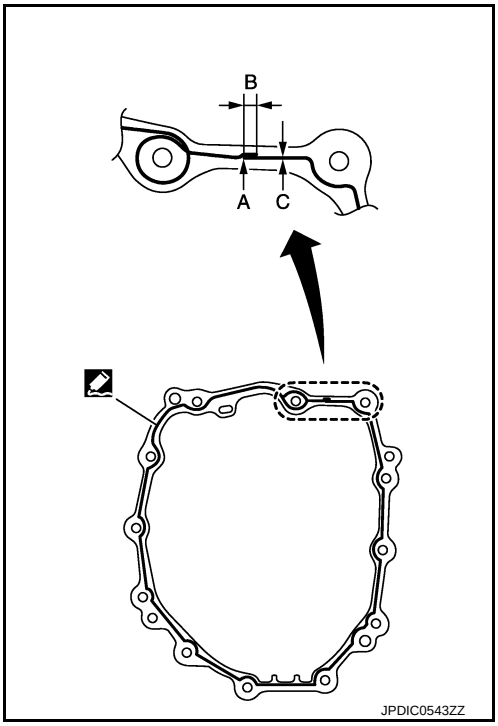

d. Install magnet to adapter plate.

e. Install transmission case to adapter plate.

CAUTION:
- **Check for baffle plate weld bolt location while installing.**
- **Check that magnet is within the specified area of adapter plate while installing.**
- **Never drop counter front bearing.**

NOTE:
Apply grease to magnet if it is difficult to keep magnet within the specified area of adapter plate.

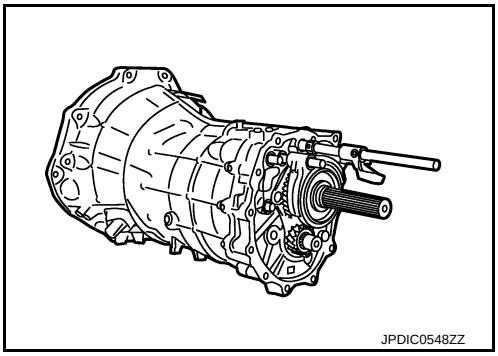

f. Install snap ring to main drive gear bearing using snap ring pliers.

CAUTION:
Never reuse snap ring.

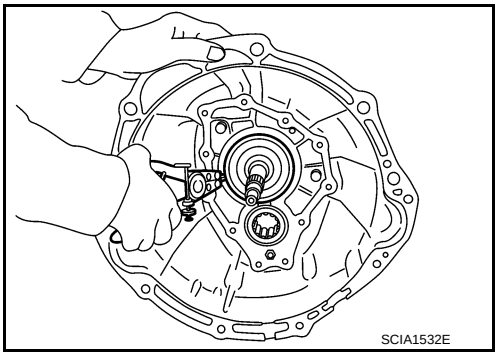

3. Install baffle plate with the following procedure.

a. Tighten baffle plate mounting nut (⬅) to the specified torque.

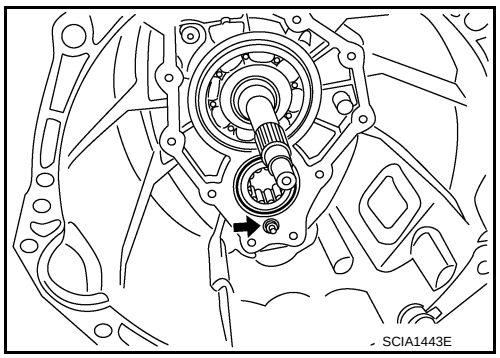

b. Install mounting bolt (⬅) to adapter plate and then tighten mounting bolt to the specified torque.

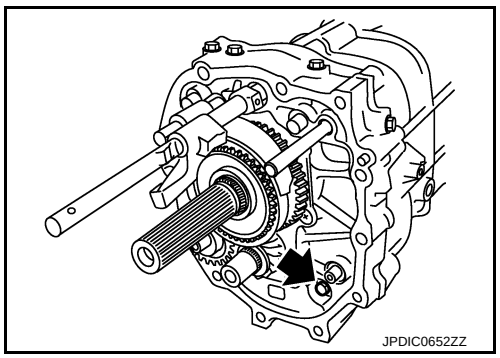

4. Install front cover with the following procedure.

a. Install front oil seal (1) to front cover using the drift (A) [SST: KV38102100 (J-25803-01)].

Dimension "H" : 8.55 – 9.55 mm (0.3366 – 0.3760 in)

CAUTION:
Never incline front oil seal.

b. Install front cover gasket and front cover to transmission case.

CAUTION:
- **Never reuse front cover gasket.**
- **Never damage front oil seal.**
- **Remove any moisture, oil, or foreign material adhering to both mating surfaces.**

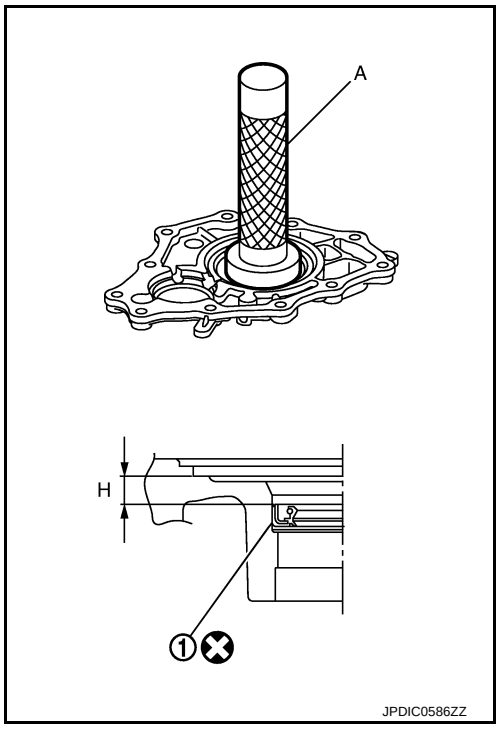

c. Temporarily tighten mounting bolt (⬅) and sealing bolt (1).

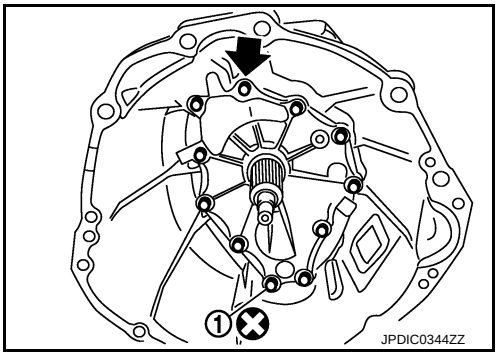

d. Temporarily tighten mounting bolts (⬅) and sealing bolts (1).

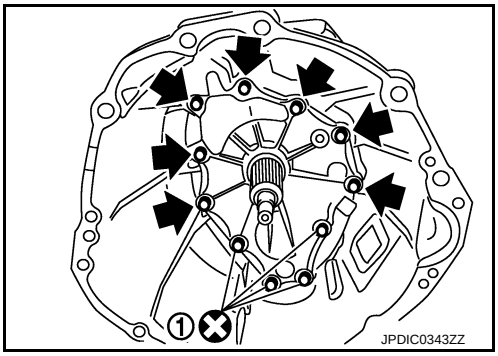

e. Tighten mounting bolts (⬅) and sealing bolts (1) to the specified torque in the numerical order as shown in the figure.

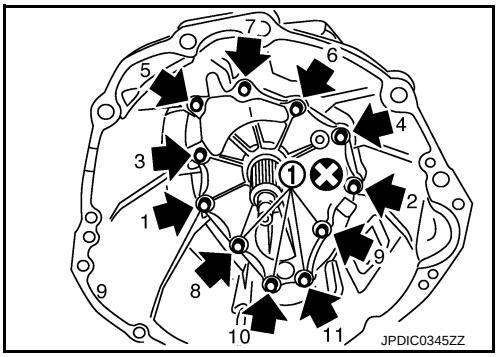

5. Install reverse idler shaft assembly (⬅) to adapter plate.
6. Install rear extension with the following procedure.

a. Install oil gutter with the following procedure.

i. Seat the prong of oil gutter in the groove on cap.

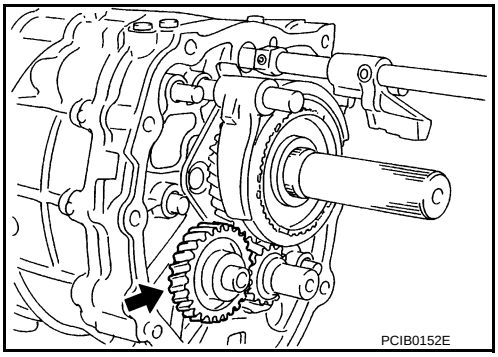

ii. Install oil gutter (1) to rear extension and then tighten mounting bolt to the specified torque.

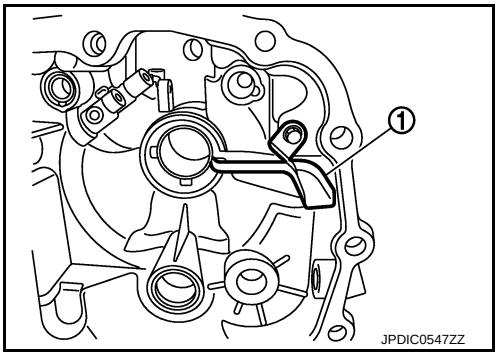

b. Install striking rod oil seal to rear extension using the drift [SST: ST33061000 (J-8107-2)].

CAUTION:
- **Never reuse striking rod oil seal.**
- **Never incline striking rod oil seal.**

c. Install dust cover to rear extension.

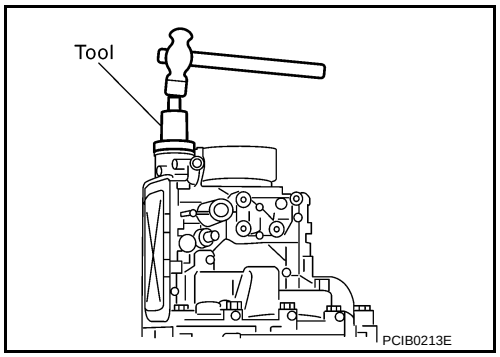

d. Install rear oil seal (1) to rear extension using the drift [SST: ST33400001 (J-26082)].

Dimension "H" : 1.2 – 2.2 mm (0.047 – 0.087 in)

CAUTION:
Never incline rear oil seal.

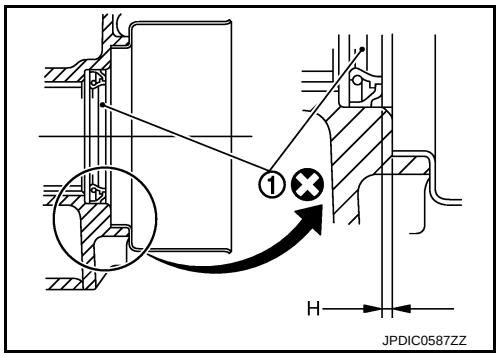

e. Apply recommended sealant to mating surface of rear extension as shown in the figure.

A : Start and finish point shall be in the center of two bolts.

Dimension "B" : 3 – 5 mm (0.12 – 0.20 in)
Sealant width "C" : 1 – 2 mm (0.04 – 0.08 in)
Sealant height "C" : 0.4 – 1 mm (0.016 – 0.04 in)

- **Use Genuine Silicone RTV or an equivalent. Refer to GI-22, "Recommended Chemical Products and Sealants".**

CAUTION:
- **Remove old sealant adhering to the mounting surfaces. Also remove any moisture, oil, or foreign material adhering to both mounting surfaces.**
- **Apply sealant so as not to break the bead.**

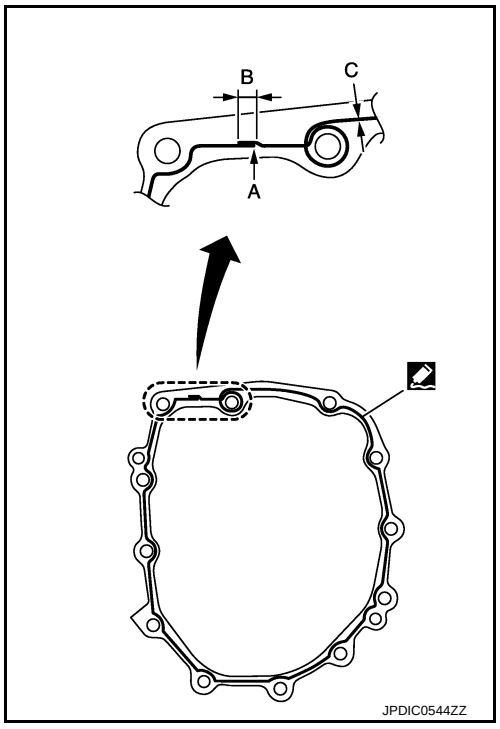

f. Install rear extension to adapter plate and then tighten mounting bolts (⬅) to the specified torque in the numerical order as shown in the figure.

CAUTION:
Never damage rear oil seal and striking rod oil seal.

7. Install control lever housing to rear extension and then tighten mounting bolts to the specified torque.

CAUTION:
Never hold control lever housing to prevent the bushing of control lever housing from deformation when moving transmission assembly.

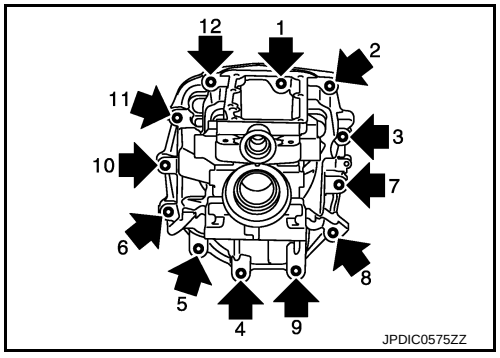

8. Install return spring plug with the following procedure.

a. Apply gear oil to return spring plungers (1).

b. Install return spring plungers and return springs (2) to rear extension.

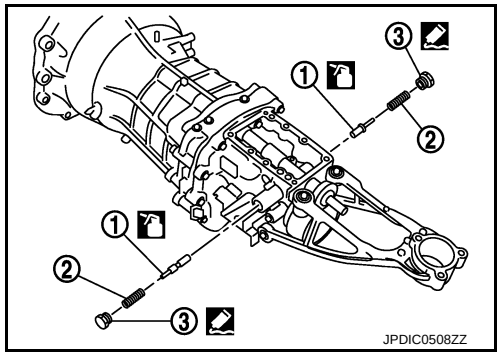

Region	Return spring identification mark	Plunger groove
RH	Brown	Without
LH	Blue	With

CAUTION:
The right and left return springs and return spring plungers are different, so make sure they are installed correctly.

c. Apply recommended sealant to threads of return spring plugs (3) and then tighten its to the specified torque.
- **Use Genuine Silicone RTV or an equivalent. Refer to GI-22, "Recommended Chemical Products and Sealants".**

CAUTION:
Remove old sealant and oil adhering to threads.

9. Install control bracket to rear extension and then tighten mounting bolts (⬅) to the specified torque.

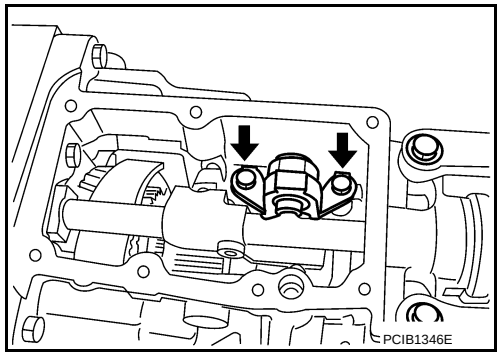

10. Install park/neutral position (PNP) switch with the following procedure.

a. Install plunger to rear extension.

CAUTION:
Be careful with orientation of plunger.

⇦ : Park/Neutral position (PNP) switch side

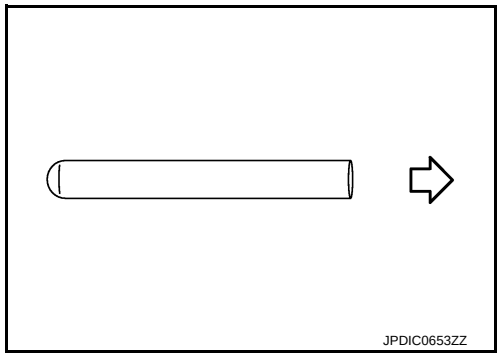

b. Temporarily tighten park/neutral position (PNP) switch onto rear extension by rotating once or twice.

CAUTION:
Remove old sealant and oil adhering to threads.

c. Apply recommended sealant to threads of park/neutral position (PNP) switch as shown in the figure.
- **Use Genuine Silicone RTV or an equivalent. Refer to GI-22, "Recommended Chemical Products and Sealants".**

d. Tighten park/neutral position (PNP) switch to the specified torque.

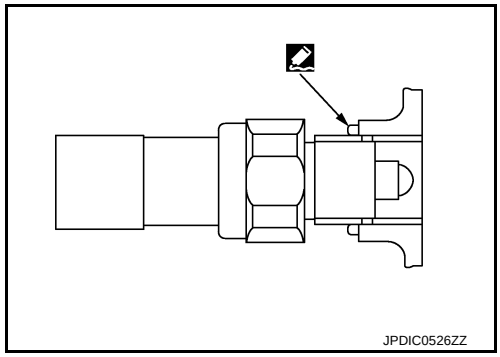

11. Install back-up lamp switch with the following procedure.

a. Temporarily tighten back-up lamp switch onto rear extension by rotating once or twice.

CAUTION:

Remove old sealant and oil adhering to threads.

b. Apply recommended sealant to threads of back-up lamp switch as shown in the figure.

- **Use Genuine Silicone RTV or an equivalent. Refer to GI-22, "Recommended Chemical Products and Sealants".**

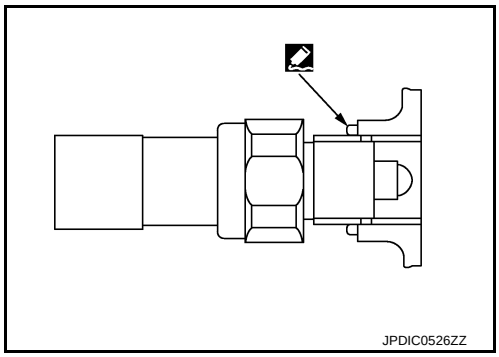
JPDIC0526ZZ

c. Tighten back-up lamp switch to the specified torque.

12. Install control rod with the following procedure.

a. Install boot to striking rod oil seal and then install control rod to striking rod.

CAUTION:

- **Be careful with the orientation of control rod.**

⇦ : Transmission front

A : View from transmission top side

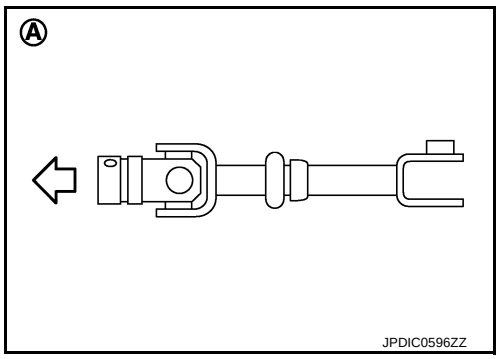

JPDIC0596ZZ

- **Be careful with the orientation of boot (1).**

⇦ : Transmission front

2 : Striking rod oil seal

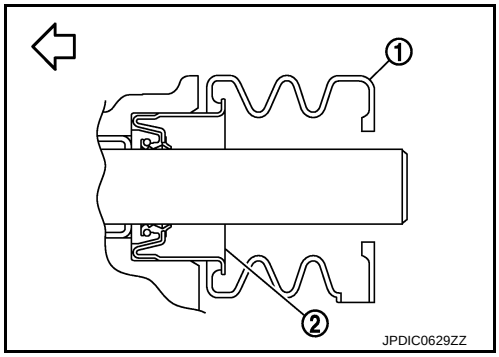

JPDIC0629ZZ

b. Install retaining pin (⬅) to control rod using a pin punch [Commercial service tool].

1 : Boot

CAUTION:

- **Never reuse retaining pin.**
- **Assemble retaining pin from the direction shown by the arrow in the figure until it becomes flush with the end surface of control rod.**

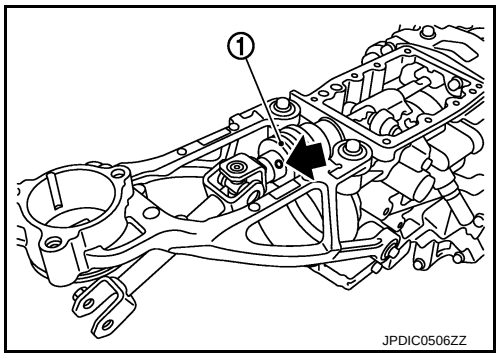

JPDIC0506ZZ

c. Install boot to control rod.

CAUTION:

- **Be careful with the orientation of boot.**

A : View from transmission rear side

- **Fit control rod boot to the groove on control rod.**

d. Install control rod boot to control rod.
CAUTION:
Fit control rod boot to the groove on control rod.

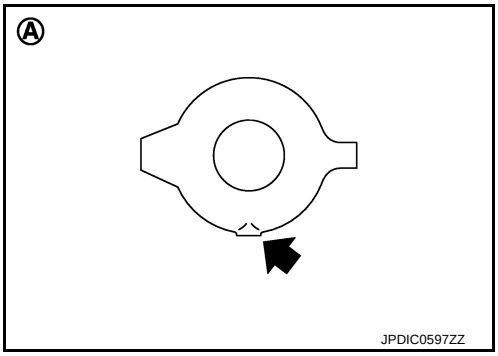

13. Install brackets with the following procedure.
a. Install bracket (1) so that it contacts transmission case rib (A) and then tighten mounting bolt to the specified torque.
CAUTION:
Be careful with orientation of bracket.
b. Install bracket (2) so that it contacts rear extension side (B) and then tighten mounting bolt to the specified torque.
c. Install bracket (3) to rear extension and then tighten mounting bolts to the specified torque.
d. Install bracket (4) so that it contacts the projection (C) of rear extension and then tighten mounting bolt to the specified torque.
e. Install bracket (5) to rear extension and then tighten mounting bolt to the specified torque.
f. Install bracket (1) so that it contacts rear extension side (A) and then tighten mounting bolt to the specified torque.
g. Install bracket (2) to rear extension and then tighten mounting bolts to the specified torque.

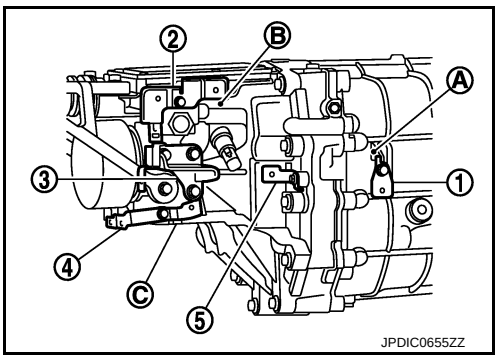

14. Install rear extension upper cover with the following procedure.
a. Apply gear oil to check ball.
CAUTION:
Never drop check ball.

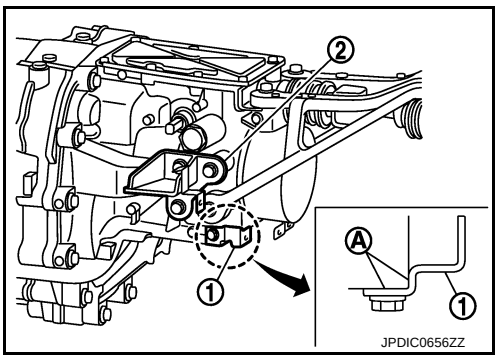

b. Install check ball and check select spring to rear extension.
c. Install rear extension upper cover gasket and rear extension upper cover to rear extension.
CAUTION:
- **Never reuse rear extension upper cover gasket.**
- **Remove any moisture, oil, or foreign material adhering to both mating surfaces.**

d. Temporarily tighten rear extension upper cover mounting bolts while holding rear extension upper cover.
CAUTION:
Avoid tangling check select spring.

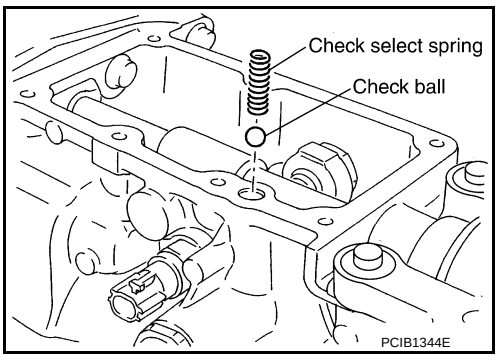

e. Tighten mounting bolts (⬅) to the specified torque in the numerical order as shown in the figure.

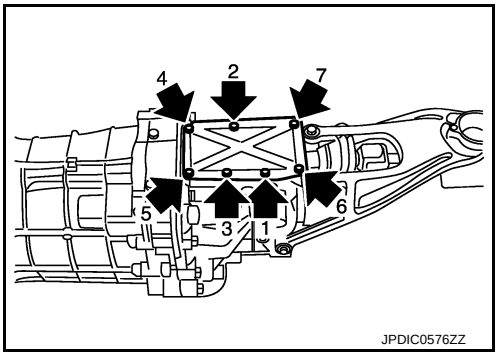

15. Install drain plug with the following procedure.

a. Install gasket to drain plug and then install it to transmission case.

CAUTION:
Never reuse gasket.

b. Tighten drain plug to the specified torque.

16. Install filler plug with the following procedure.

a. Install gasket to filler plug and then install it to transmission case.

CAUTION:
Never reuse gasket.

b. Tighten filler plug to the specified torque.

CAUTION:
After gear oil is filled, tighten filler plug to the specified torque.

Inspection

INFOID:0000000006207608

INSPECTION BEFORE DISASSEMBLY

Shaft

Before disassembly, measure the end play “L” for each position. If the end play is outside the standard value, disassemble and inspect.

- Mainshaft

1 : Snap ring
2 : Reverse synchronizer hub

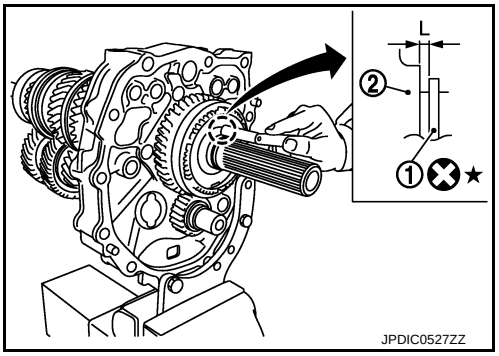

End play “L” : Refer to TM-95, "End Play".

- Counter shaft

1 : Snap ring
2 : Reverse counter gear

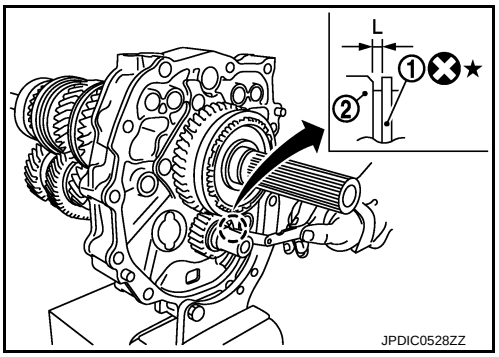

End play “L” : Refer to TM-95, "End Play".

INSPECTION AFTER DISASSEMBLY

Case and Plate

- Check the bearing mounting surface for wear, cracks, and damages. Replace if necessary.
- Check the mating surface for wear, cracks, and damages. Replace if necessary.

Extension and Cover

- Check the oil seal mounting surface for wear, cracks, and damages. Replace if necessary.
- Check the mating surface for wear, cracks, and damages. Replace if necessary.

Gear

Check the gears for any damage, scaling, or uneven wear. Replace if necessary.

Synchronizer Hub and Coupling Sleeve

- Check the contact surface of the coupling sleeve, synchronizer hub, and shifting inserts for damage and uneven wear. Replace if necessary.
- The coupling sleeve and synchronizer hub moves smoothly.

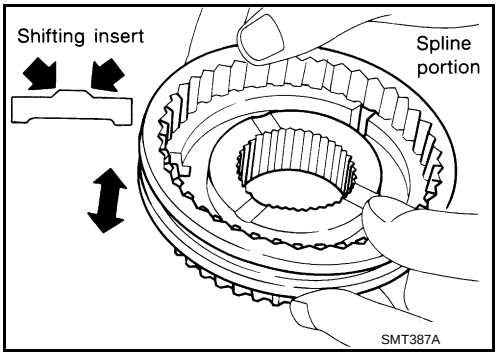

Baulk Ring and Spread Spring

- Check the cam surface and contact surface of the baulk ring for damage and uneven wear. Replace if necessary.
- Check the spread springs for damage. Replace if necessary.

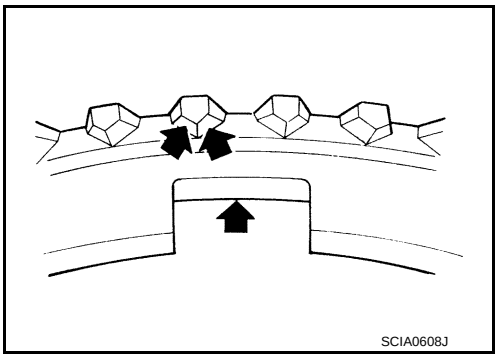

Baulk Ring Clearance for Single Cone Synchronizer (Reverse)

Measure the clearance “A” when pressing the baulk ring (1) against the cone (B) of clutch gear by hands at 2 points or more on the opposite side using a feeler gauge (C), and then calculate the mean value. Replace if outside the limit value.

Clearance “A” : Refer to TM-95, "Baulk Ring Clearance".

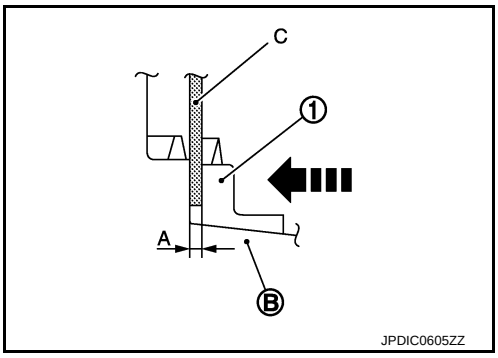

Bearing

Check the bearing for damage and unsmooth rotation. Replace if necessary.

MAIN DRIVE GEAR

Exploded View

INFOID:0000000006207609

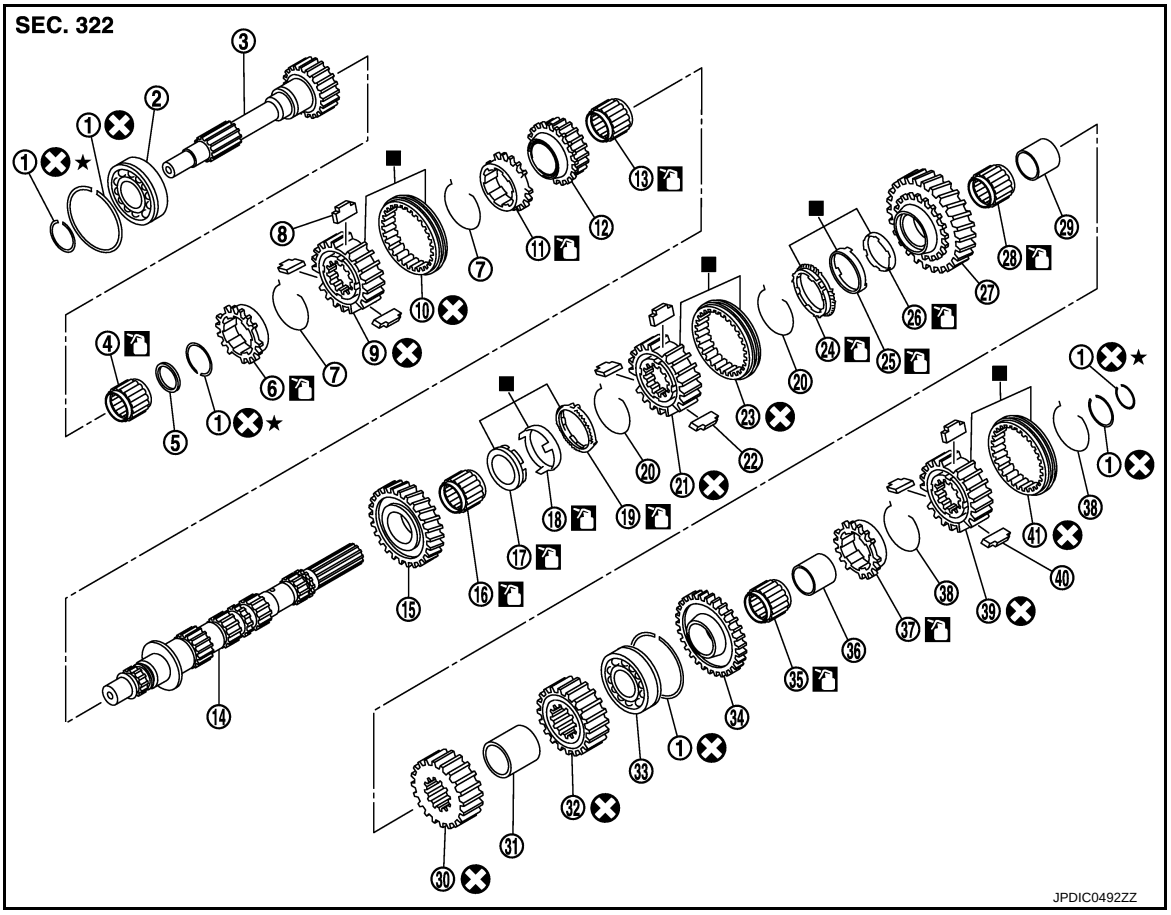

1. Snap ring
2. Main drive gear bearing
3. Main drive gear
4. Main pilot bearing
5. Pilot bearing spacer
6. 5th baulk ring
7. 5th-6th spread spring
8. 5th-6th shifting insert
9. 5th-6th synchronizer hub
10. 5th-6th coupling sleeve
11. 6th baulk ring
12. 6th main gear
13. 6th needle bearing
14. Mainshaft
15. 2nd main gear
16. 2nd needle bearing
17. 2nd inner baulk ring
18. 2nd synchronizer cone
19. 2nd outer baulk ring
20. 1st-2nd spread spring
21. 1st-2nd synchronizer hub
22. 1st-2nd shifting insert
23. 1st-2nd coupling sleeve
24. 1st outer baulk ring
25. 1st synchronizer cone
26. 1st inner baulk ring
27. 1st main gear
28. 1st needle bearing
29. 1st gear bushing
30. 3rd main gear
31. 3rd-4th main spacer
32. 4th main gear
33. Mainshaft bearing
34. Reverse main gear
35. Reverse needle bearing
36. Reverse main gear bushing
37. Reverse baulk ring
38. Reverse spread spring
39. Reverse synchronizer hub
40. Reverse shifting insert
41. Reverse coupling sleeve

■: Replace the parts as a set.

: Apply gear oil.

Refer to GI-4, "Components" for symbols not described on the above.

- Apply gear oil to gears, shafts, synchronizers, and bearings when assembling.

Disassembly

INFOID:0000000006207610

1. Remove 5th baulk ring, pilot bearing spacer, and main pilot bearing from main drive gear.
2. Remove snap ring from main drive gear using snap ring pliers.

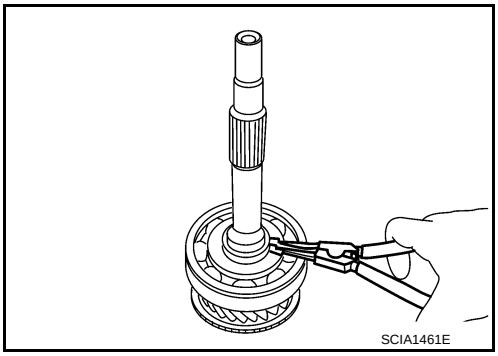

3. Remove main drive gear bearing with the following procedure.

a. Set a puller [Commercial service tool] to main drive gear bearing.

b. Remove main drive gear bearing from main drive gear with a pressing machine.

CAUTION:
Never drop main drive gear.

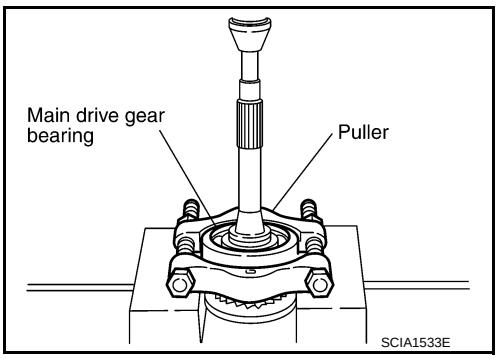

Assembly

INFOID:0000000006207611

1. Install main drive gear bearing (1) to main drive gear with a pressing machine using the drift (A) [SST: KV32102700 (-)].

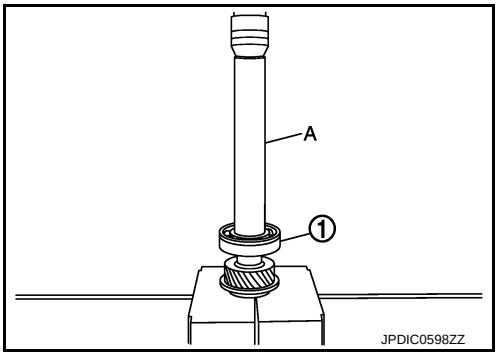

CAUTION:
Be careful with the orientation of main drive gear bearing.

⇦ : Snap ring side

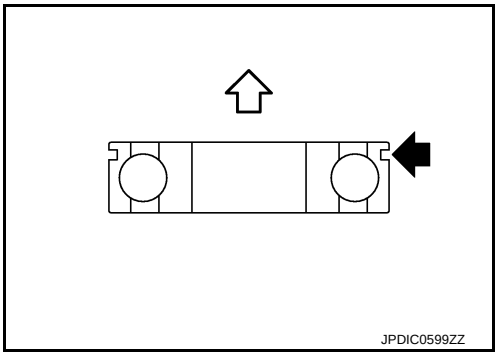

2. Select and install snap ring (1) to main drive gear so that the end play “L” is adjusted to the standard value. For selecting snap ring, refer to the latest parts information.

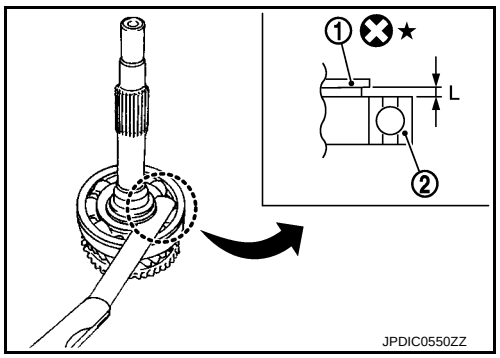

2 : Main drive gear bearing

End play “L” : Refer to TM-95, "End Play".

3. Apply gear oil to main pilot bearing and 5th baulk ring.

4. Install main pilot bearing, pilot bearing spacer, and 5th baulk ring to main drive gear.
NOTE:
5th and 6th baulk rings have three spaces that four gear teeth are missing as shown in the figure.

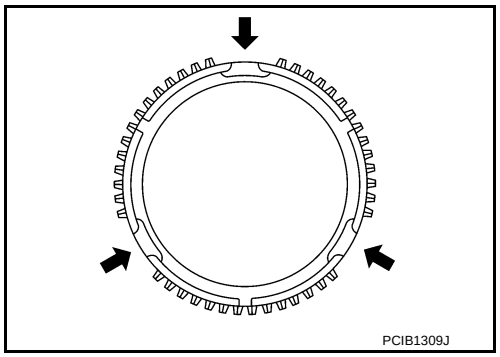

Inspection

INFOID:0000000006207612

INSPECTION BEFORE DISASSEMBLY

Gear

Before disassembly, measure the end play “L”. If the end play is outside the standard value, disassemble and inspect.

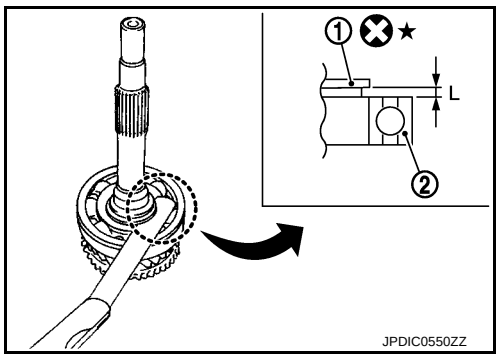

1 : Snap ring
2 : Main drive gear bearing

End play “L” : Refer to TM-95, "End Play".

INSPECTION AFTER DISASSEMBLY

Gear

Check the gear for any damage, scaling, or uneven wear. Replace if necessary.

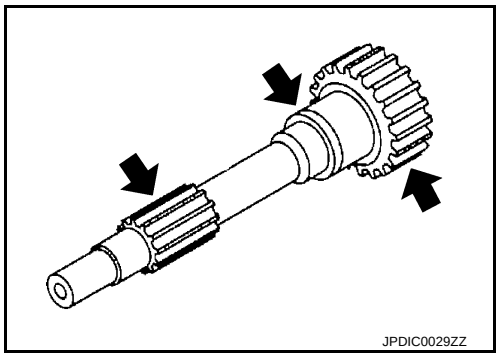

Baulk Ring

Check the cam surface and contact surface of the baulk ring for damage and uneven wear. Replace if necessary.

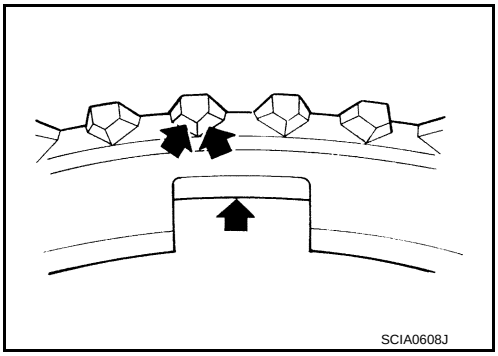

Baulk Ring Clearance for Single Cone Synchronizer (5th)

Measure the clearance “A” when pressing the baulk ring (1) against the cone (B) of clutch gear by hands at 2 points or more on the opposite side using a feeler gauge (C), and then calculate the mean value. Replace if outside the limit value.

Clearance “A” : Refer to TM-95, "Baulk Ring Clearance".

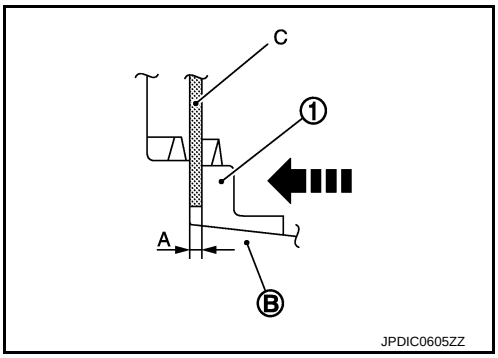

Bearing

Check the bearing for damage and unsmooth rotation. Replace if necessary.

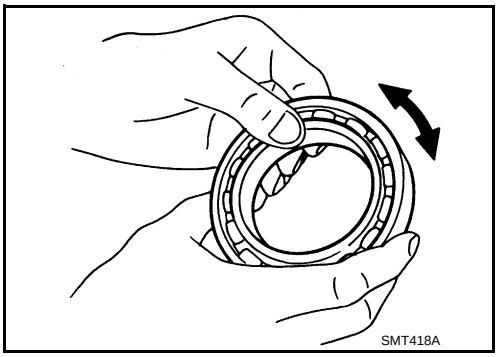

MAINSHAFT AND GEAR

Exploded View

INFOID:0000000006207613

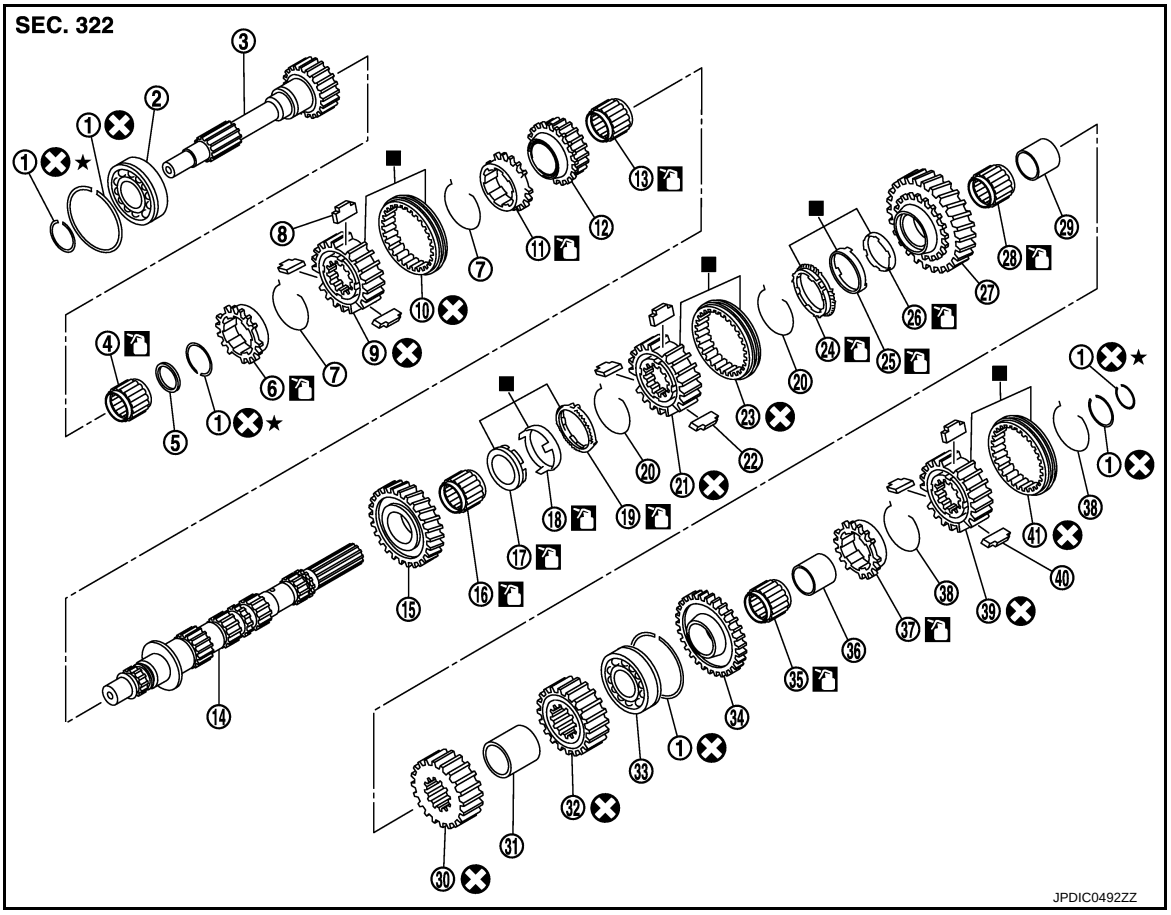

1. Snap ring
2. Main drive gear bearing
3. Main drive gear
4. Main pilot bearing
5. Pilot bearing spacer
6. 5th baulk ring
7. 5th-6th spread spring
8. 5th-6th shifting insert
9. 5th-6th synchronizer hub
10. 5th-6th coupling sleeve
11. 6th baulk ring
12. 6th main gear
13. 6th needle bearing
14. Mainshaft
15. 2nd main gear
16. 2nd needle bearing
17. 2nd inner baulk ring
18. 2nd synchronizer cone
19. 2nd outer baulk ring
20. 1st-2nd spread spring
21. 1st-2nd synchronizer hub
22. 1st-2nd shifting insert
23. 1st-2nd coupling sleeve
24. 1st outer baulk ring
25. 1st synchronizer cone
26. 1st inner baulk ring
27. 1st main gear
28. 1st needle bearing
29. 1st gear bushing
30. 3rd main gear
31. 3rd-4th main spacer
32. 4th main gear
33. Mainshaft bearing
34. Reverse main gear
35. Reverse needle bearing
36. Reverse main gear bushing
37. Reverse baulk ring
38. Reverse spread spring
39. Reverse synchronizer hub
40. Reverse shifting insert
41. Reverse coupling sleeve

: Replace the parts as a set.

: Apply gear oil.

Refer to GI-4, "Components" for symbols not described on the above.

- Apply gear oil to gears, shafts, synchronizers, and bearings when assembling.

Disassembly

INFOID:0000000006207614

1. Remove 4th main gear with the following procedure.

a. Set a puller [Commercial service tool] to 4th main gear.

b. Remove mainshaft bearing and reverse main gear bushing together with 4th main gear from mainshaft with a pressing machine.
CAUTION:
Never drop mainshaft.

2. Remove 3rd-4th main spacer from mainshaft.

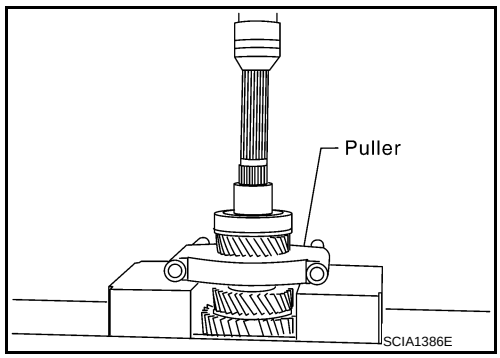

3. Remove 1st main gear with the following procedure.

a. Set a puller [Commercial service tool] to 1st main gear.

b. Remove 3rd main gear together with 1st main gear from mainshaft with a pressing machine.
CAUTION:
- **Never damage 1st outer baulk ring.**
- **Never drop mainshaft.**

4. Remove 1st outer baulk ring, 1st synchronizer cone, 1st inner baulk ring, and 1st needle bearing from mainshaft.

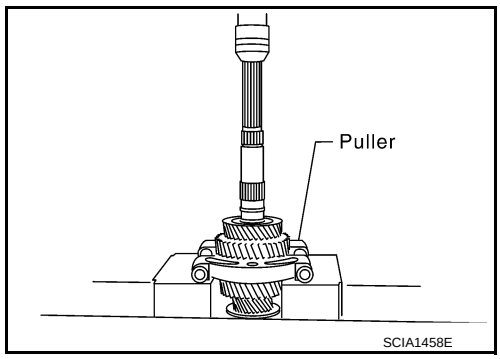

5. Remove 2nd main gear with the following procedure.

a. Set a puller [Commercial service tool] to 2nd main gear.
CAUTION:
Set V-block in the position where V-block does not contact with collar of mainshaft.

b. Remove 1st gear bushing, 1st-2nd synchronizer hub assembly, 2nd outer baulk ring, 2nd synchronizer cone, and 2nd inner baulk together with 2nd main gear from mainshaft with a pressing machine.
CAUTION:
- **Never damage mainshaft.**
- **Never drop mainshaft.**

6. Remove 1st-2nd spread springs, 1st-2nd shifting inserts, and 1st-2nd coupling sleeve from 1st-2nd synchronizer hub.

7. Remove 2nd needle bearing from mainshaft.

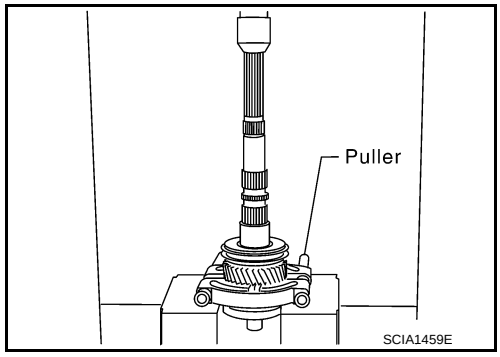

8. Remove snap ring from mainshaft.

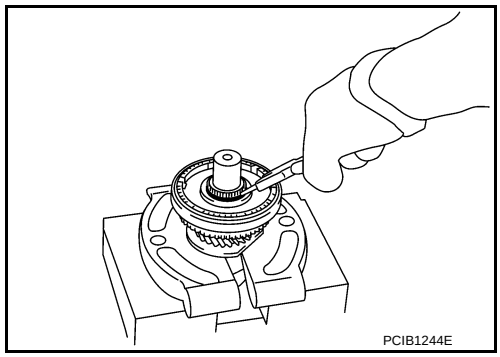

9. Remove 6th main gear with the following procedure.

a. Set a puller [Commercial service tool] to 6th main gear.
CAUTION:
Set V-block in the position where V-block does not contact with collar of mainshaft.

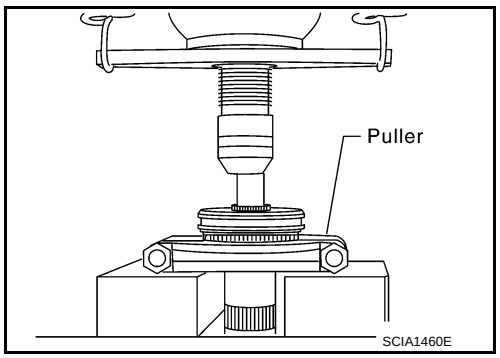

b. Remove 6th baulk ring and 5th-6th synchronizer hub assembly together with 6th main gear from mainshaft with a pressing machine.
CAUTION:
- **Never damage mainshaft.**
- **Never drop mainshaft.**

10. Remove 5th-6th spread springs, 5th-6th shifting inserts, and 5th-6th coupling sleeve from 5th-6th synchronizer hub.
11. Remove 6th needle bearing from mainshaft.

Assembly

INFOID:0000000006207615

1. Apply gear oil to 6th needle bearing and 6th baulk ring.
2. Install 6th needle bearing, 6th main gear, and 6th baulk ring to mainshaft.
NOTE:
5th and 6th baulk rings have three spaces that four gear teeth are missing as shown in the figure.

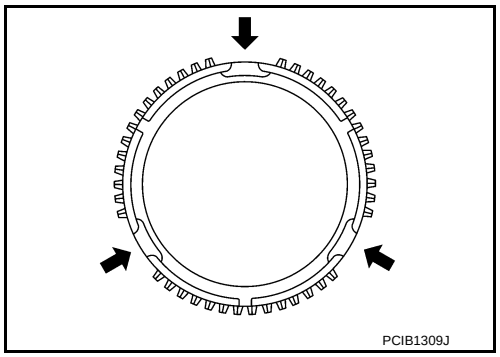

3. Install 5th-6th synchronizer hub assembly with the following procedure.

a. Install 5th-6th coupling sleeve and 5th-6th shifting inserts to 5th-6th synchronizer hub.
CAUTION:
- **Be careful with the orientation of 5th-6th coupling sleeve.**

⇦ : 6th main gear side

- **Never reuse 5th-6th coupling sleeve and 5th-6th synchronizer hub.**
- **Replace 5th-6th coupling sleeve and 5th-6th synchronizer hub as a set.**

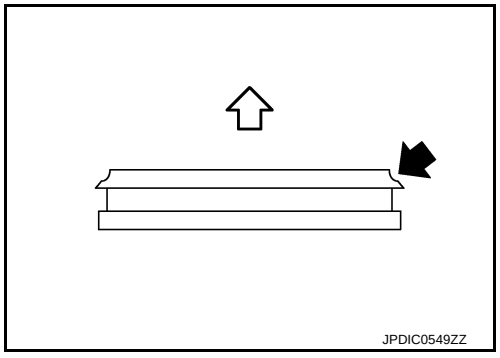

- **Be careful with the orientation of 5th-6th synchronizer hub.**

A : 5th main gear side
B : 6th main gear side

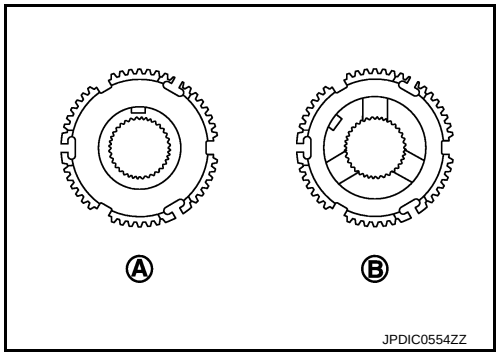

- **Be careful with the shape of 5th-6th shifting insert.**

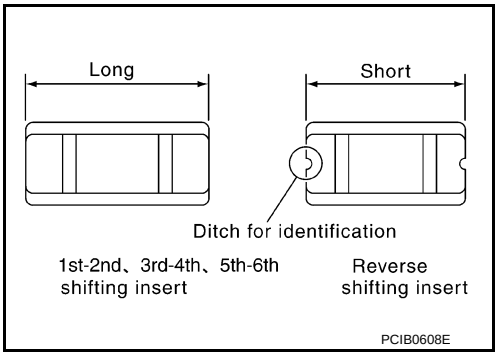

b. Install 5th-6th spread springs to 5th-6th shifting inserts.

CAUTION:

Never install 5th-6th spread spring hook onto the same 5th-6th shifting insert.

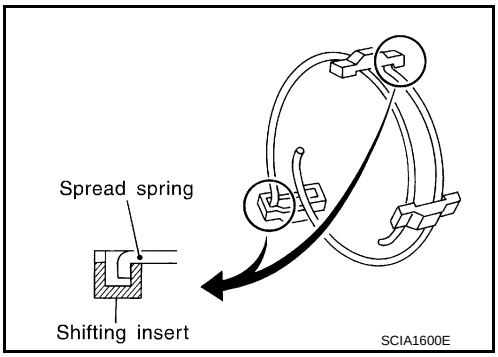

c. Install 5th-6th synchronizer hub assembly to mainshaft with a pressing machine using the inserter (A) [SST: ST30911000 (-)].

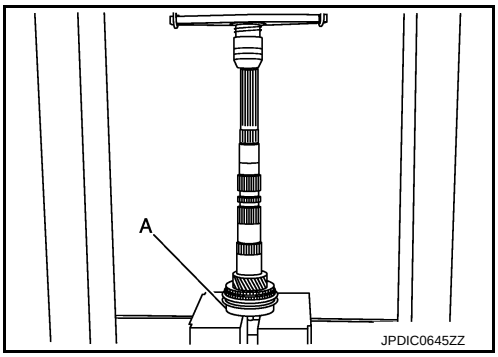

CAUTION:

Be careful with the orientation of 5th-6th coupling sleeve.

⇦ : 6th main gear side

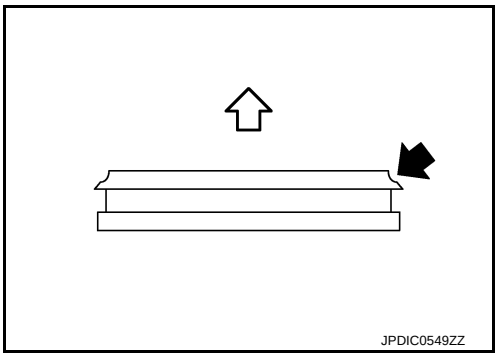

4. Select and install snap ring (1) to mainshaft so that the end play "L" of mainshaft is adjusted to the standard value. For selecting snap ring, refer to the latest parts information.

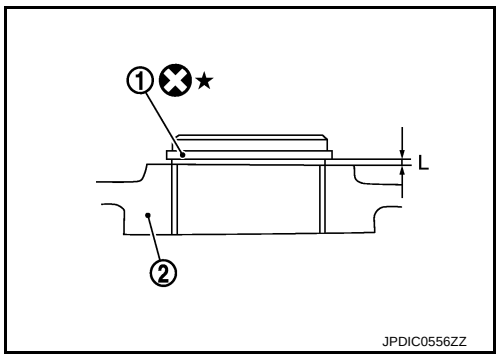

2 : 5th-6th synchronizer hub

End play "L" : Refer to TM-95, "End Play".

5. Apply gear oil to 2nd needle bearing, 2nd inner baulk ring, 2nd synchronizer cone, and 2nd outer baulk ring.
CAUTION:
Replace 2nd inner baulk ring, 2nd synchronizer cone, and 2nd outer baulk ring as a set.

6. Install 2nd needle bearing, 2nd main gear, 2nd inner baulk ring, 2nd synchronizer cone, and 2nd outer baulk ring to mainshaft.
NOTE:
1st outer baulk ring has three spaces that four gear teeth are missing and 2nd outer baulk ring has three spaces that two gear teeth are missing.

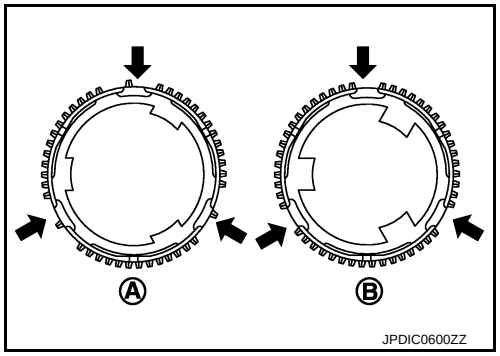

A : 1st outer baulk ring
B : 2nd outer baulk ring

7. Install 1st-2nd synchronizer hub assembly with the following procedure.

a. Install 1st-2nd coupling sleeve and 1st-2nd shifting inserts to 1st-2nd synchronizer hub.
CAUTION:
- **Be careful with the orientation of 1st-2nd coupling sleeve.**

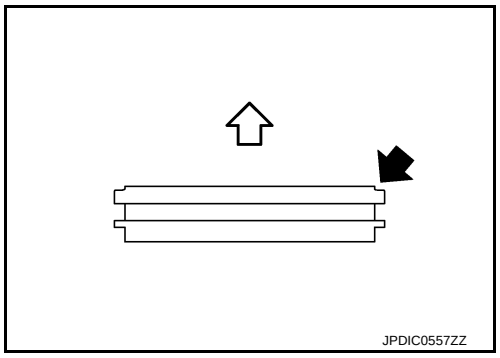

⇦ : 2nd main gear side

- **Never reuse 1st-2nd coupling sleeve and 1st-2nd synchronizer hub.**
- **Replace 1st-2nd coupling sleeve and 1st-2nd synchronizer hub as a set.**

- **Be careful with the orientation of 1st-2nd synchronizer hub.**

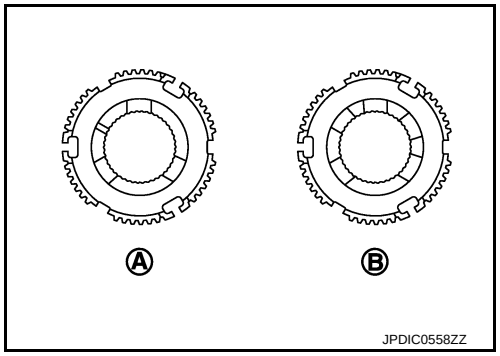

A : 2nd main gear side
B : 1st main gear side

- **Be careful with the shape of 1st-2nd shifting insert.**

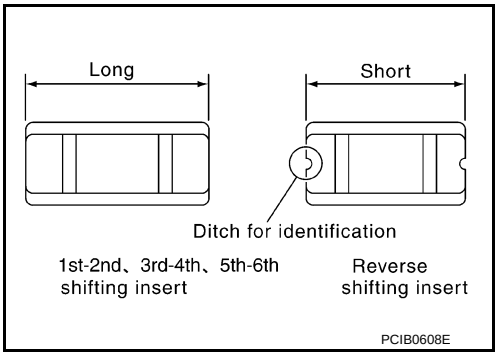

b. Install 1st-2nd spread springs to 1st-2nd shifting inserts.

CAUTION:

Never install 1st-2nd spread spring hook onto the same 1st-2nd shifting insert.

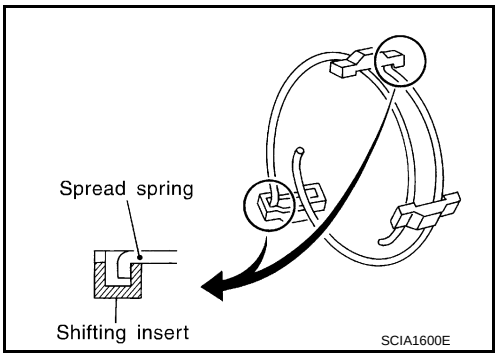

c. Install 1st-2nd synchronizer hub assembly (1) to mainshaft with a pressing machine using the support ring (A) [SST: ST27861000 (-)].

2 : 2nd main gear

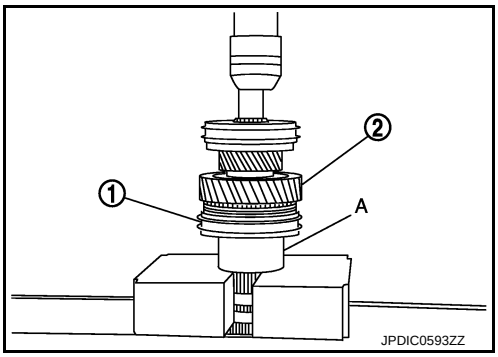

CAUTION:

Be careful with the orientation of 1st-2nd coupling sleeve.

⇦ : 2nd main gear side

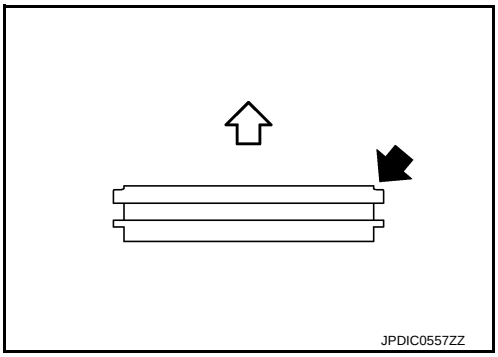

8. Install 1st gear bushing (1) to mainshaft with a pressing machine using the support ring (A) [SST: ST27861000 (-)].

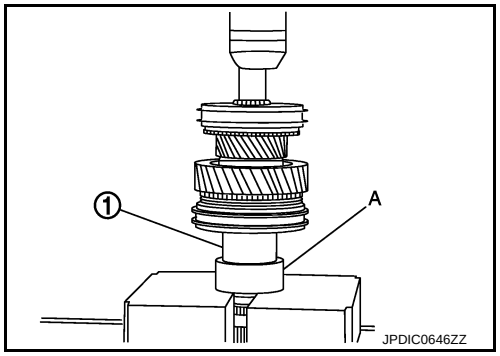

9. Apply gear oil to 1st needle bearing, 1st outer baulk ring, 1st synchronizer cone, and 1st inner baulk ring.

CAUTION:

Replace 1st outer baulk ring, 1st synchronizer cone, and 1st inner baulk ring as a set.

10. Install 1st outer baulk ring, 1st synchronizer cone, 1st inner baulk ring, 1st needle bearing, and 1st main gear to mainshaft.

NOTE:

1st outer baulk ring has three spaces that four gear teeth are missing and 2nd outer baulk ring has three spaces that two gear teeth are missing.

A : 1st outer baulk ring

B : 2nd outer baulk ring

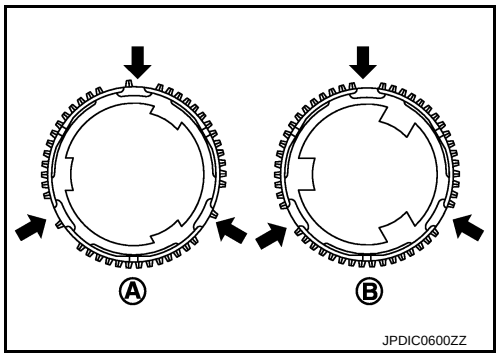

11. Install 3rd main gear (1) to mainshaft with a pressing machine using the inserter (A) [SST: ST30022000 (-)].

2 : 1st main gear

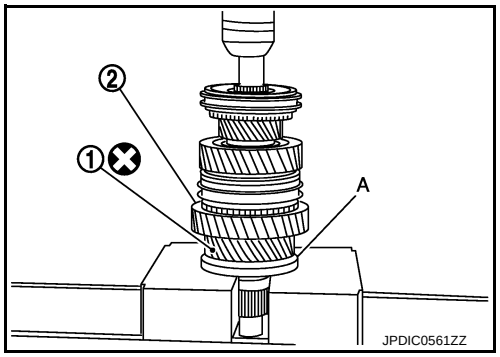

CAUTION:

Be careful with the orientation of 3rd main gear.

⇦ : 1st main gear side

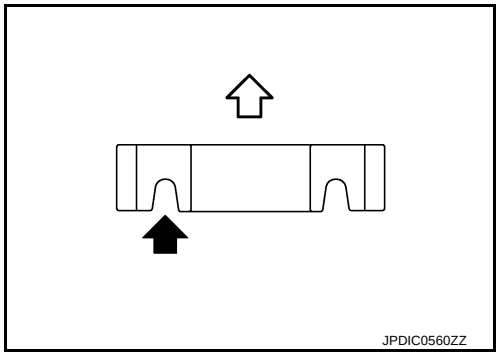

12. Install 3rd-4th main spacer (1) to mainshaft.
13. Install 4th main gear (2) to mainshaft with a pressing machine using the inserter (A) [SST: ST30022000 (-)].

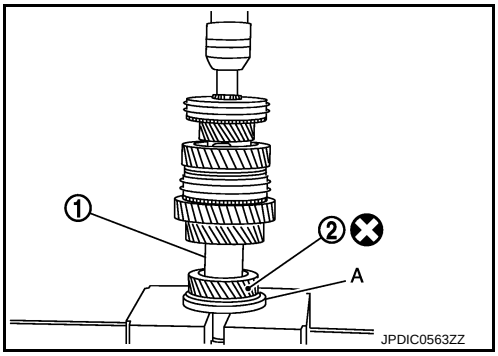

CAUTION:
Be careful with the orientation of 4th main gear.

⇦ : 3rd-4th main spacer side

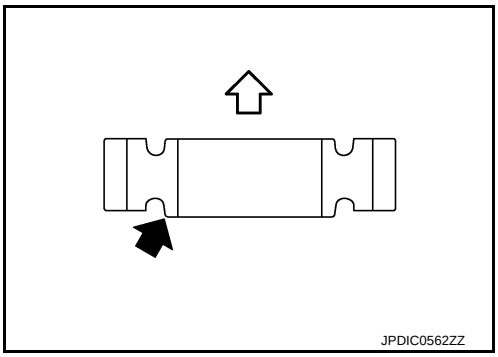

14. Install mainshaft bearing (1) to mainshaft with a pressing machine using the inserter (A) [SST: ST30911000 (-)].

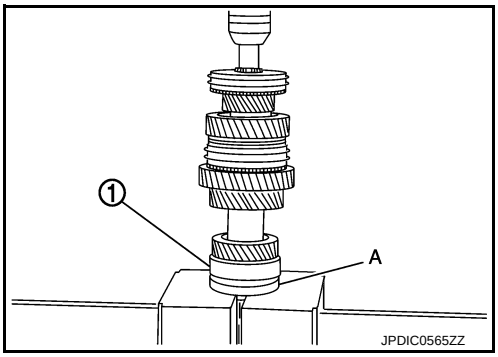

CAUTION:
Be careful with the orientation of mainshaft bearing.

⇦ : 4th main gear side

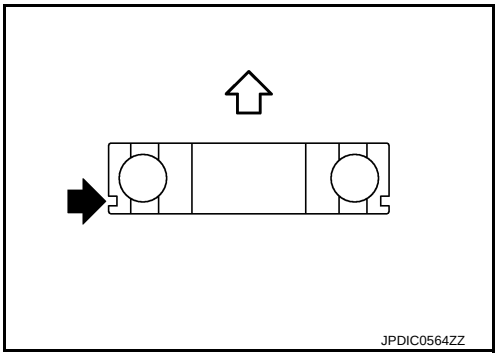

15. Install reverse main gear bushing to mainshaft with a pressing machine using the inserter [SST: ST30911000 (-)].

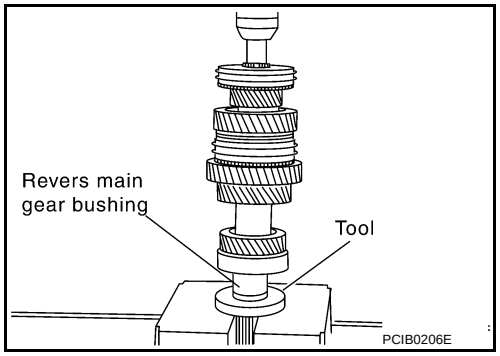

Inspection

INFOID:0000000006207616

INSPECTION BEFORE DISASSEMBLY

Shaft

Before disassembly, measure the end play “L”. If the end play is outside the standard value, disassemble and inspect.

1 : Snap ring
2 : 5th-6th synchronizer hub

End play “L” : Refer to TM-95, "End Play".

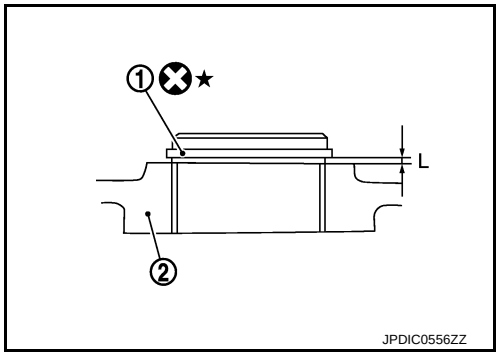

INSPECTION AFTER DISASSEMBLY

Shaft and Gear

- Check the shaft for damage or bend. Replace if necessary.
- Check the gears for any damage, scaling, or uneven wear. Replace if necessary.

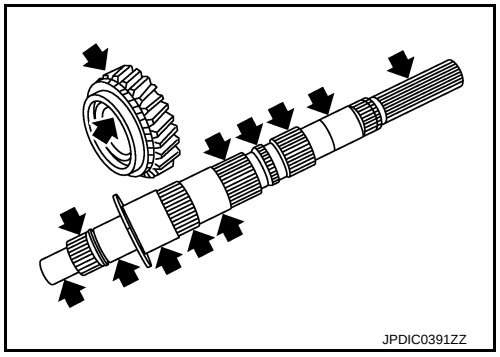

Synchronizer Hub and Coupling Sleeve

- Check the contact surface of the coupling sleeve, synchronizer hub, and shifting inserts for damage and uneven wear. Replace if necessary.
- The coupling sleeve and synchronizer hub moves smoothly.

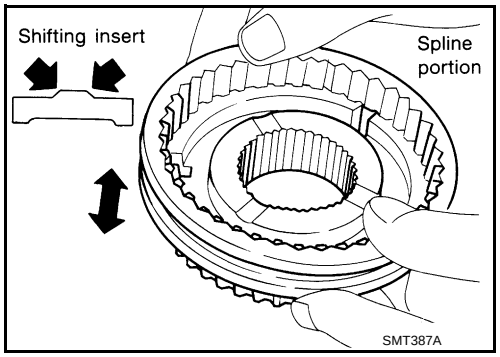

Baulk Ring and Spread Spring

- Check the cam surface and contact surface of the baulk ring for damage and uneven wear. Replace if necessary.
- Check the spread springs for damage. Replace if necessary.

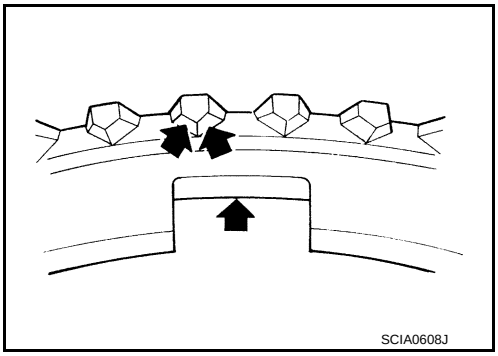
SCIA0608J

Baulk Ring Clearance for Single Cone Synchronizer (6th)

Measure the clearance “A” when pressing the baulk ring (1) against the cone (B) of clutch gear by hands at 2 points or more on the opposite side using a feeler gauge (C), and then calculate the mean value. Replace if outside the limit value.

Clearance “A” : Refer to TM-95, "Baulk Ring Clearance".

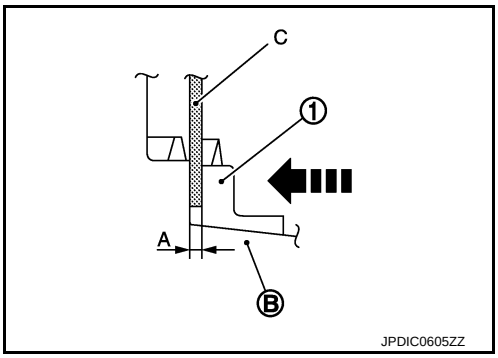

JPDIC0605ZZ

Baulk Ring Clearance for Triple Cone Synchronizer (1st and 2nd)

Measure the clearance of outer baulk ring (1), synchronizer cone (2), and inner baulk ring (3) with the following procedure.

CAUTION:

The outer baulk ring, synchronizer cone, and inner baulk ring manage the clearances “A”, “B”, and “C” as a set. Therefore, replace them as a set if the clearances are outside the limit value.

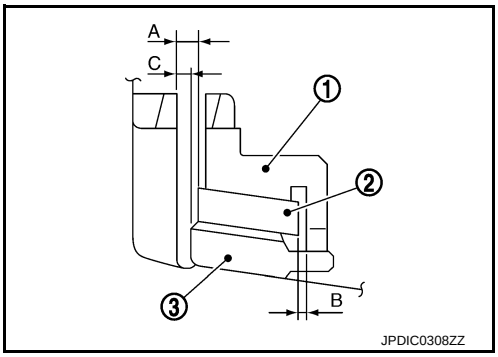

JPDIC0308ZZ

1. Measure the clearance “A” when pressing the outer baulk ring (1) against the cone (C) of clutch gear by hands at 2 points or more on the opposite side using a feeler gauge (B), and then calculate the mean value.

   2 : Synchronizer cone
   3 : Inner baulk ring

Clearance “A” : Refer to TM-95, "Baulk Ring Clearance".

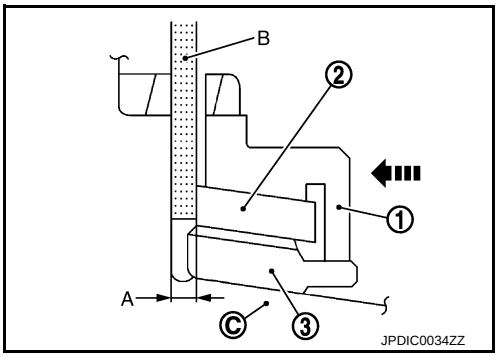

JPDIC0034ZZ

2. Measure the clearance “B“ at 2 points or more on the opposite side using a feeler gauge (A), and then calculate the mean value.

1 : Outer baulk ring
2 : Synchronizer cone

Clearance “B” : Refer to TM-95, "Baulk Ring Clearance".

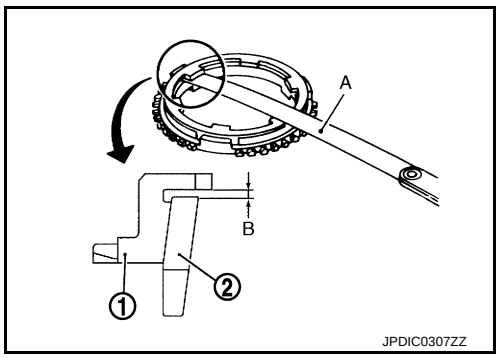

3. Measure the clearance “C” when pressing the outer baulk ring (1) against the cone (B) of clutch gear by hands at 2 points or more on the opposite side using a feeler gauge (A), and then calculate the mean value.

2 : Synchronizer cone
3 : Inner baulk ring

Clearance “C” : Refer to TM-95, "Baulk Ring Clearance".

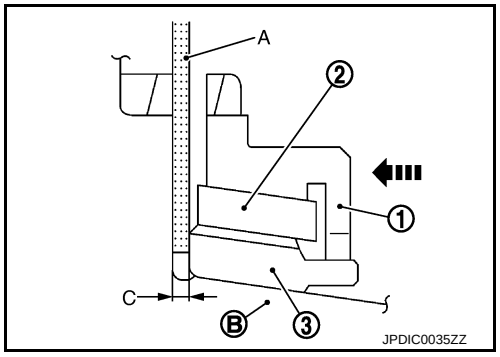

Bearing

Check the bearing for damage and unsmooth rotation. Replace if necessary.

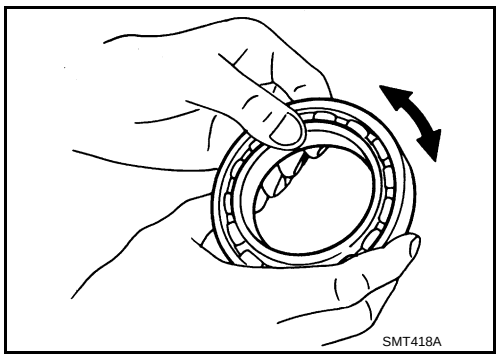

COUNTER SHAFT AND GEAR

Exploded View

INFOID:0000000006207617

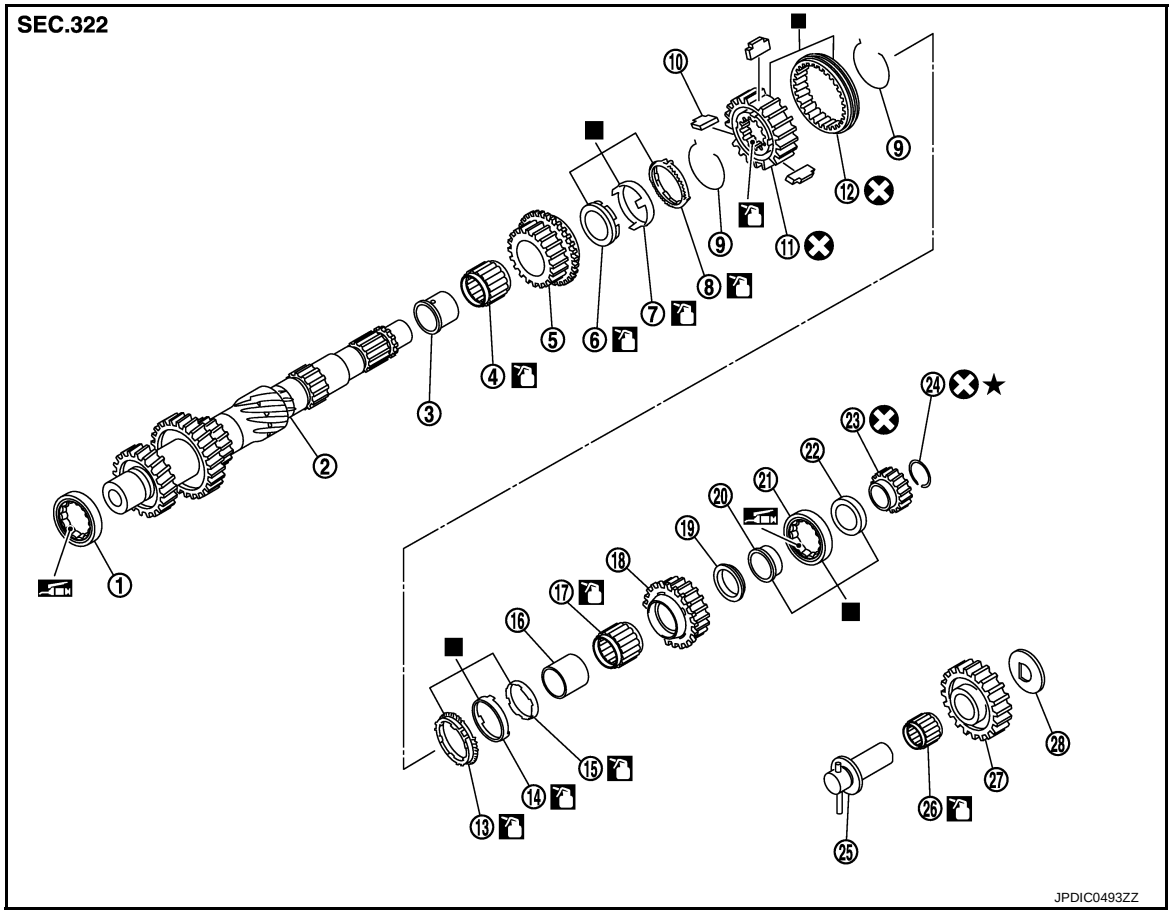

1. Counter front bearing
2. Counter shaft
3. 3rd gear bushing
4. 3rd needle bearing
5. 3rd counter gear
6. 3rd inner baulk ring
7. 3rd synchronizer cone
8. 3rd outer baulk ring
9. 3rd-4th spread spring
10. 3rd-4th shifting insert
11. 3rd-4th synchronizer hub
12. 3rd-4th coupling sleeve
13. 4th outer baulk ring
14. 4th synchronizer cone
15. 4th inner baulk ring
16. 4th gear bushing
17. 4th needle bearing
18. 4th counter gear
19. 4th counter gear thrust washer
20. Counter rear bearing inner race
21. Counter rear bearing
22. Counter rear bearing spacer
23. Reverse counter gear
24. Snap ring
25. Reverse idler shaft
26. Reverse idler needle bearing
27. Reverse idler gear
28. Reverse idler thrust washer

■: Replace the parts as a set.

: Apply gear oil.

: Apply lithium-based grease including molybdenum disulphide.

Refer to GI-4, "Components" for symbols not described on the above.

- Apply gear oil to gears, shafts, synchronizers, and bearings when assembling.

Disassembly

INFOID:0000000006207618

1. Remove 3rd counter gear with the following procedure.

a. Set a puller [Commercial service tool] to 3rd counter gear.
b. Remove the parts below together with 3rd counter gear from counter shaft with a pressing machine.

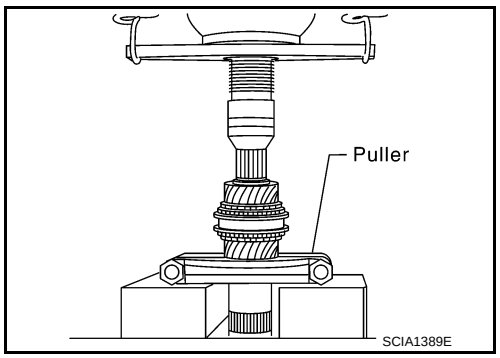

- Counter rear bearing inner race
- 4th counter gear thrust washer
- 4th counter gear
- 4th needle bearing
- 4th gear bushing
- 4th inner baulk ring
- 4th synchronizer cone
- 4th outer baulk ring
- 3rd-4th synchronizer hub assembly
- 3rd outer baulk ring
- 3rd synchronizer cone
- 3rd inner baulk ring

CAUTION:
Never drop counter shaft.

2. Remove 3rd-4th spread springs, 3rd-4th shifting inserts, and 3rd-4th coupling sleeve from 3rd-4th synchronizer hub.
3. Remove 3rd needle bearing from counter shaft.
4. Remove 3rd gear bushing with the following procedure.

a. Set a puller [Commercial service tool] to 3rd gear bushing.
b. Remove 3rd gear bushing from counter shaft with a pressing machine.

CAUTION:
- **Never use oil hole of 3rd gear bushing when press out.**
- **Never drop counter shaft.**

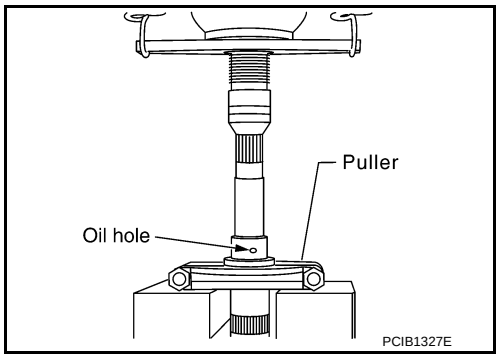

Assembly

INFOID:0000000006207619

1. Install 3rd gear bushing to counter shaft with a pressing machine using the inserter [SST: ST30911000 (-)].

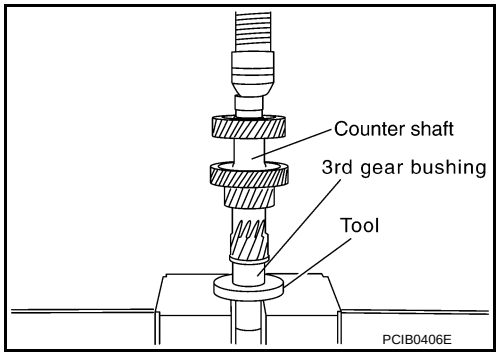

CAUTION:

Be careful with the orientation of 3rd gear bushing.

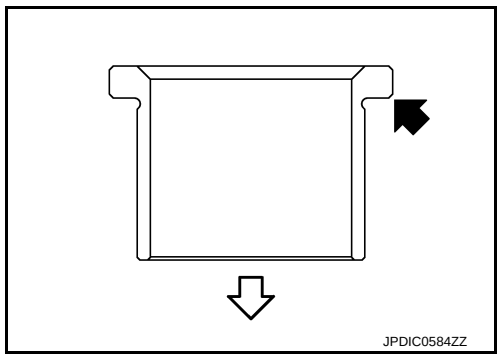

⇦ : 4th counter gear side

2. Apply gear oil to 3rd needle bearing, 3rd inner baulk ring, 3rd synchronizer cone, and 3rd outer baulk ring.
CAUTION:
Replace 3rd inner baulk ring, 3rd synchronizer cone, and 3rd outer baulk ring as a set.
3. Install 3rd needle bearing, 3rd counter gear, 3rd inner baulk ring, 3rd synchronizer cone, and 3rd outer baulk ring to counter shaft.

NOTE:
4th outer baulk ring has three spaces that one gear tooth is missing but 3rd outer baulk ring doesn't.

A : 3rd outer baulk ring
B : 4th outer baulk ring

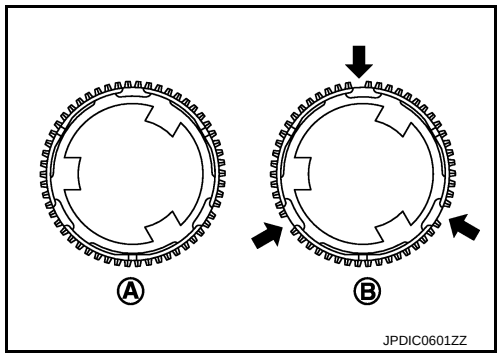

4. Install 3rd-4th synchronizer hub assembly with the following procedure.

a. Install 3rd-4th coupling sleeve and 3rd-4th shifting inserts to 3rd-4th synchronizer hub.
CAUTION:
- **Be careful with the shape of 3rd-4th shifting insert.**
- **Never reuse 3rd-4th coupling sleeve and 3rd-4th synchronizer hub.**
- **Replace 3rd-4th coupling sleeve and 3rd-4th synchronizer hub as a set.**

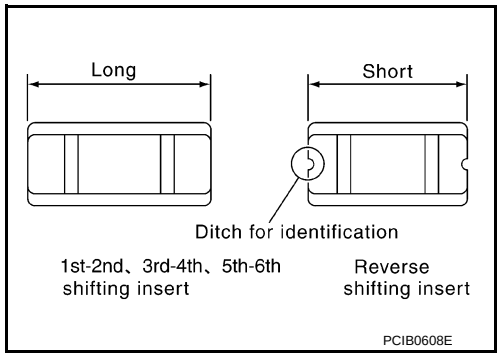

b. Install 3rd-4th spread springs to 3rd-4th shifting inserts.
CAUTION:
Never install 3rd-4th spread spring hook onto the same 3rd-4th shifting insert.
c. Apply gear oil to the hole spline press fitting side of 3rd-4th synchronizer hub.

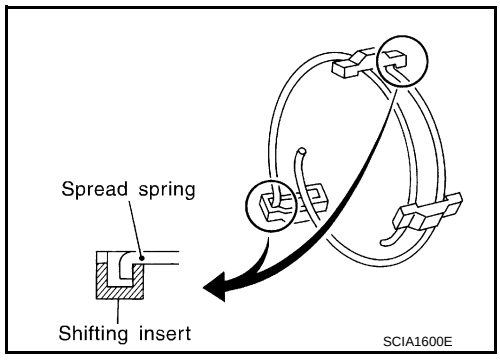

d. Install 3rd-4th synchronizer hub assembly (1) to counter shaft with a pressing machine using the inserter (A) [SST: ST30911000 (-)].

2 : 3rd counter gear

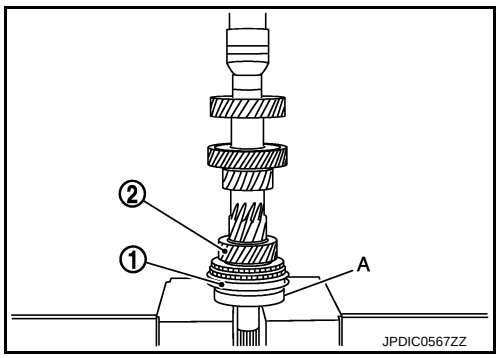

CAUTION:
Be careful with the orientation of 3rd-4th coupling sleeve.

⇦ : 3rd counter gear side

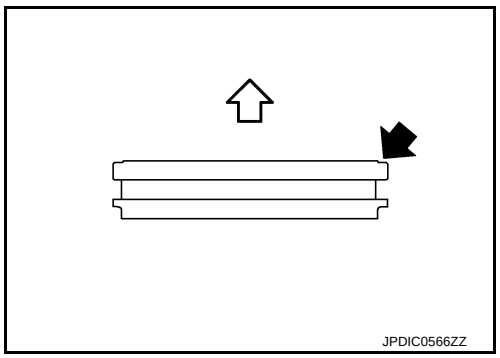

5. Install 4th counter gear thrust washer with the following procedure.

a. Set 4th counter gear thrust washer (1), 4th gear bushing, 4th needle bearing, and 4th counter gear to the inserter (A) [SST: KV40100630 (J-26092)].

2 : 4th counter gear

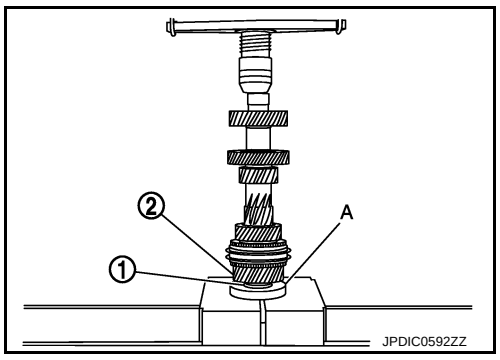

CAUTION:
Be careful with the orientation of 4th counter gear thrust washer.

⇦ : 4th counter gear side

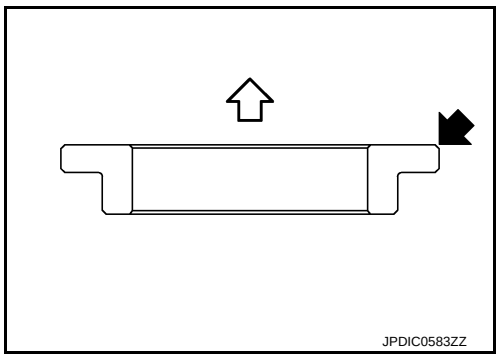

b. Apply gear oil to 4th needle bearing, 4th outer baulk ring, 4th synchronizer cone, and 4th inner baulk ring.
CAUTION:
Replace 4th outer baulk ring, 4th synchronizer cone, and 4th inner baulk ring as a set.

c. Install 4th outer baulk ring, 4th synchronizer cone, and 4th inner baulk ring to 4th counter gear.
NOTE:

4th outer baulk ring has three spaces that one gear tooth is missing but 3rd outer baulk ring doesn't.

A : 3rd outer baulk ring
B : 4th outer baulk ring

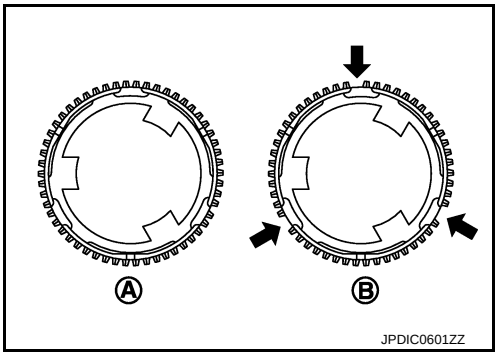

d. Install 4th gear bushing, 4th needle bearing, and 4th counter gear together with 4th counter gear thrust washer to counter shaft with a pressing machine.

6. Install counter rear bearing inner race (1) to counter shaft with a pressing machine using the inserter (A) [SST: ST30032000 (J-26010-01)].

CAUTION:

- **Replace counter rear bearing inner race, counter rear bearing, and counter rear bearing spacer as a set.**

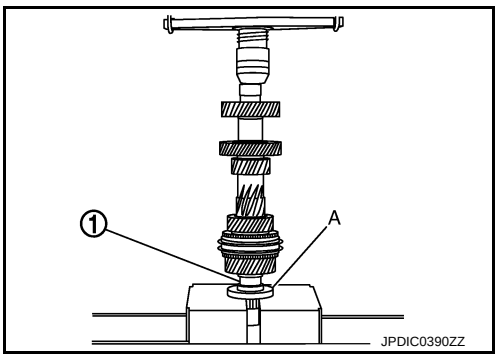

- **Be careful with the orientation of counter rear bearing inner race.**

⇦ : 4th counter gear side

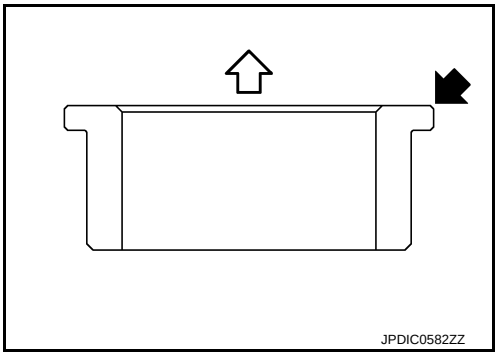

Inspection

INFOID:0000000006207620

INSPECTION AFTER DISASSEMBLY

Shaft and Gear

- Check the shaft for damage or bend. Replace if necessary.
- Check the gears for any damage, scaling, or uneven wear. Replace if necessary.

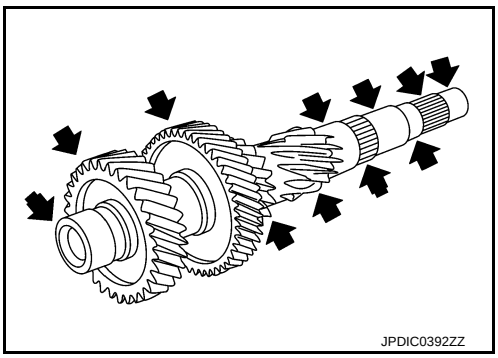

Synchronizer Hub and Coupling Sleeve

- Check the contact surface of the coupling sleeve, synchronizer hub, and shifting inserts for damage and uneven wear. Replace if necessary.
- The coupling sleeve and synchronizer hub moves smoothly.

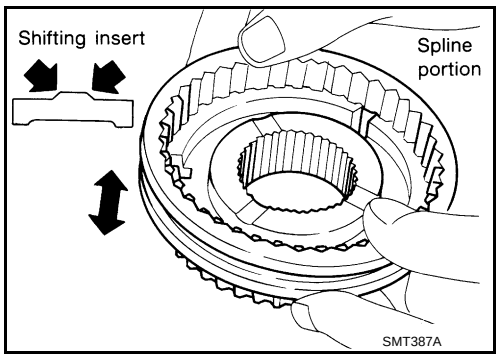

Baulk Ring and Spread Spring

- Check the cam surface and contact surface of the baulk ring for damage and uneven wear. Replace if necessary.
- Check the spread springs for damage. Replace if necessary.

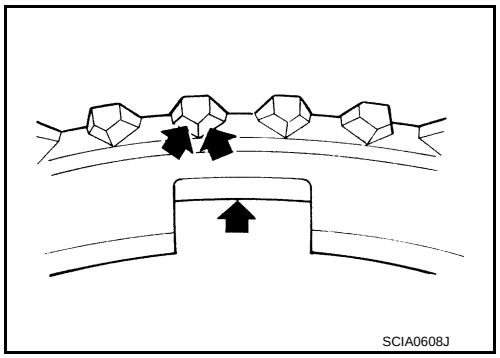

Baulk Ring Clearance for Double Cone Synchronizer (4th)

Measure the clearance of outer baulk ring (1), synchronizer cone (2), and inner baulk ring (3) with the following procedure.

CAUTION:

The outer baulk ring, synchronizer cone, and inner baulk ring manage the clearances “A” and “B” as a set. Therefore, replace them as a set if the clearances are outside the limit value.

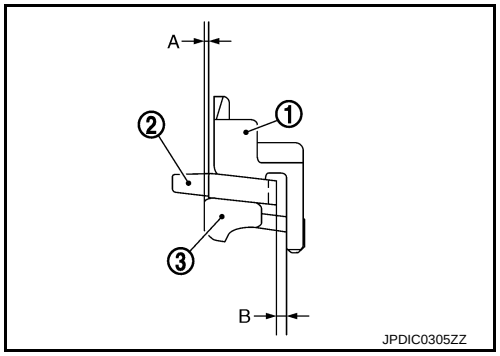

1. Measure the clearance “A” at 2 points or more on the opposite side using a dial indicator (B) and the puller (C) [SST: ST30031000 (J-22912-01)], and then calculate the mean value.

   1 : Inner baulk ring
   2 : Synchronizer cone

   Clearance “A” : Refer to TM-95, "Baulk Ring Clearance".

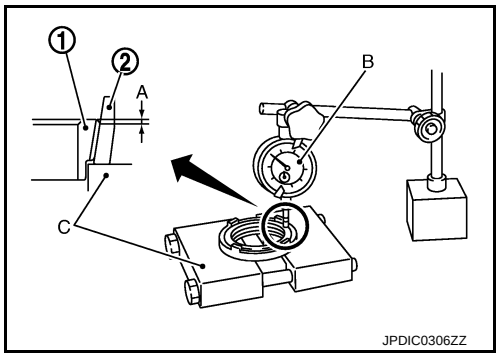

2. Measure the clearance “B” at 2 points or more on the opposite side using a feeler gauge (A), and then calculate the mean value.

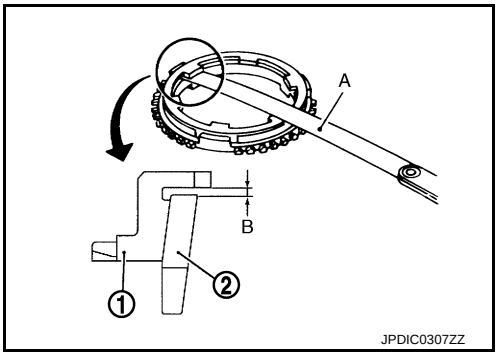

1 : Outer baulk ring
2 : Synchronizer cone

Clearance “B” : Refer to TM-95, "Baulk Ring Clearance".

Baulk Ring Clearance for Triple Cone Synchronizer (3rd)

Measure the clearance of outer baulk ring (1), synchronizer cone (2), and inner baulk ring (3) with the following procedure.

CAUTION:

The outer baulk ring, synchronizer cone, and inner baulk ring manage the clearances “A”, “B”, and “C” as a set. Therefore, replace them as a set if the clearances are outside the limit value.

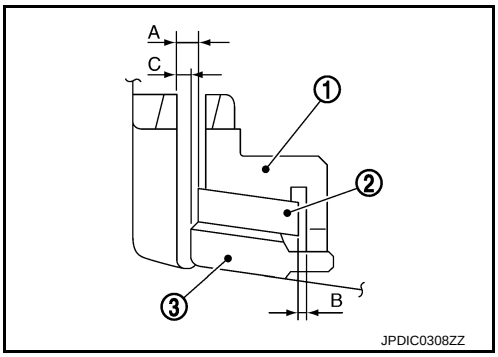

1. Measure the clearance “A” when pressing the outer baulk ring (1) against the cone (C) of clutch gear by hands at 2 points or more on the opposite side using a feeler gauge (B), and then calculate the mean value.

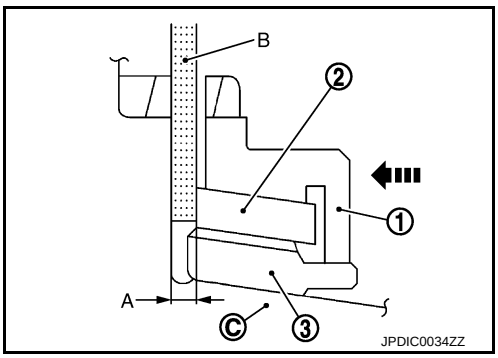

2 : Synchronizer cone
3 : Inner baulk ring

Clearance “A” : Refer to TM-95, "Baulk Ring Clearance".

2. Measure the clearance “B“ at 2 points or more on the opposite side using a feeler gauge (A), and then calculate the mean value.

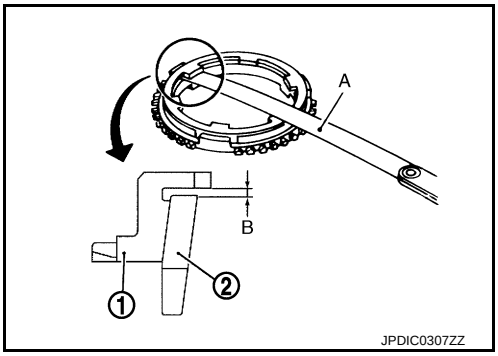

1 : Outer baulk ring
2 : Synchronizer cone

Clearance “B” : Refer to TM-95, "Baulk Ring Clearance".

3. Measure the clearance “C” when pressing the outer baulk ring (1) against the cone (B) of clutch gear by hands at 2 points or more on the opposite side using a feeler gauge (A), and then calculate the mean value.

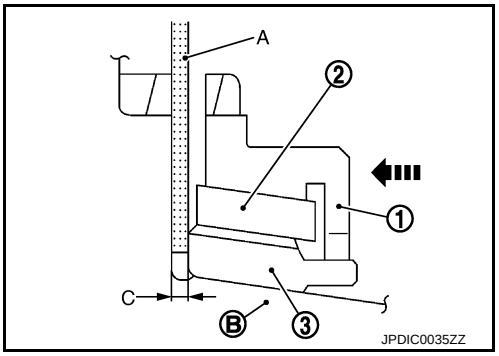

2 : Synchronizer cone
3 : Inner baulk ring

Clearance “C” **: Refer to TM-95, "Baulk Ring Clearance".**

Bearing

Check the bearing for damage and unsmooth rotation. Replace if necessary.

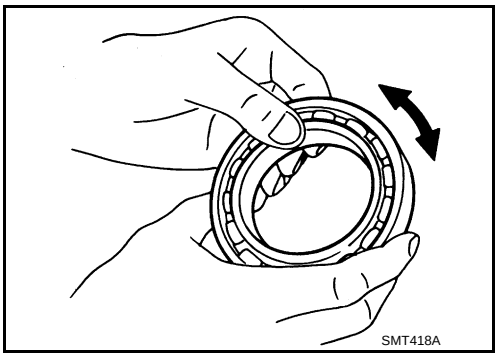

REVERSE IDLER SHAFT AND GEAR

Exploded View

INFOID:0000000006207621

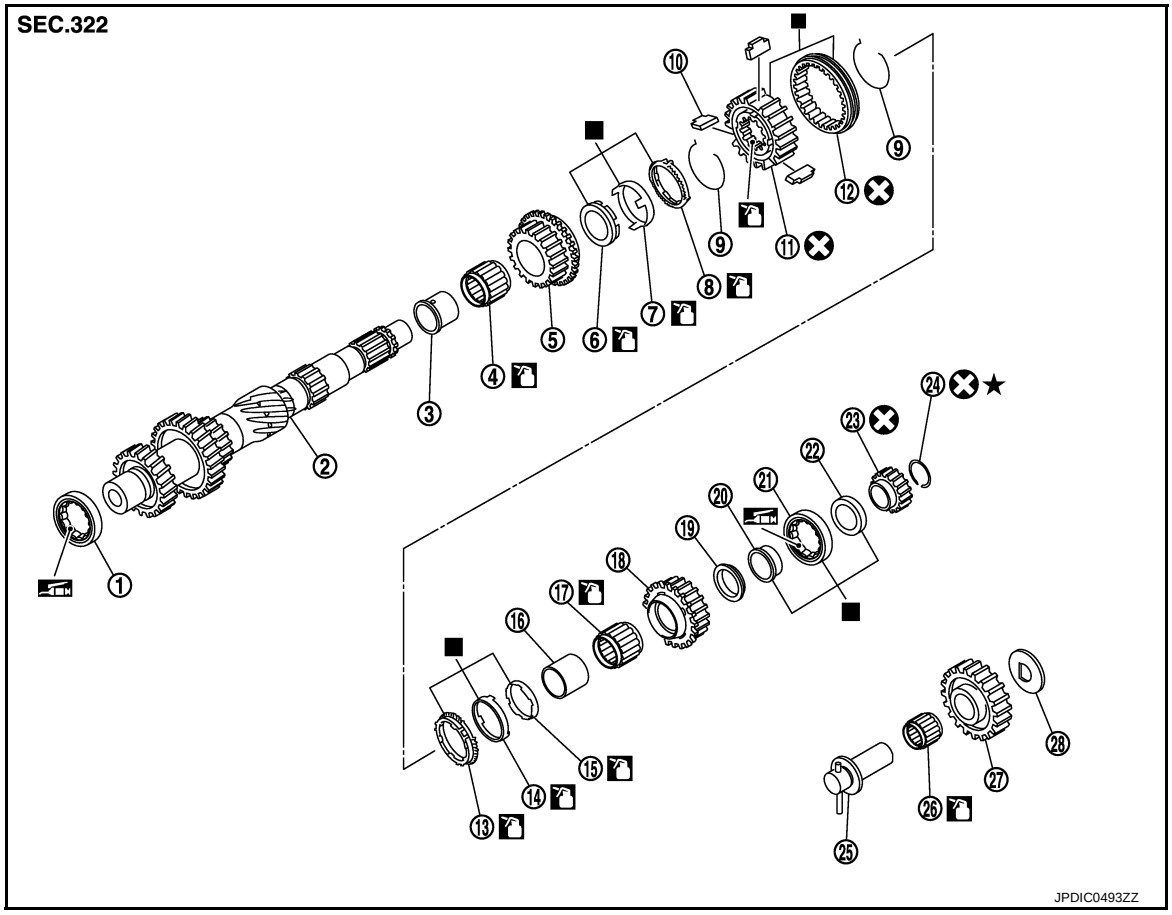

1. Counter front bearing
2. Counter shaft
3. 3rd gear bushing
4. 3rd needle bearing
5. 3rd counter gear
6. 3rd inner baulk ring
7. 3rd synchronizer cone
8. 3rd outer baulk ring
9. 3rd-4th spread spring
10. 3rd-4th shifting insert
11. 3rd-4th synchronizer hub
12. 3rd-4th coupling sleeve
13. 4th outer baulk ring
14. 4th synchronizer cone
15. 4th inner baulk ring
16. 4th gear bushing
17. 4th needle bearing
18. 4th counter gear
19. 4th counter gear thrust washer
20. Counter rear bearing inner race
21. Counter rear bearing
22. Counter rear bearing spacer
23. Reverse counter gear
24. Snap ring
25. Reverse idler shaft
26. Reverse idler needle bearing
27. Reverse idler gear
28. Reverse idler thrust washer

■: Replace the parts as a set.

: Apply gear oil.

: Apply lithium-based grease including molybdenum disulphide.

Refer to GI-4, "Components" for symbols not described on the above.

- Apply gear oil to gears, shafts, synchronizers, and bearings when assembling.

Disassembly

INFOID:0000000006207622

1. Remove reverse idler thrust washer from reverse idler shaft.
2. Remove reverse idler gear from reverse idler shaft.
3. Remove reverse idler needle bearing from reverse idler shaft.

Assembly

INFOID:0000000006207623

Note the following, and assemble in the reverse order of disassembly.

CAUTION:

Apply gear oil to reverse idler needle bearing.

Inspection

INFOID:0000000006207624

INSPECTION AFTER DISASSEMBLY

Shaft and Gear

- Check the shaft for damage or bend. Replace if necessary.
- Check the gear for any damage, scaling, or uneven wear. Replace if necessary.

Bearing

Check the bearing for damage and unsmooth rotation. Replace if necessary.

SHIFT FORK AND FORK ROD

Exploded View

INFOID:0000000006207625

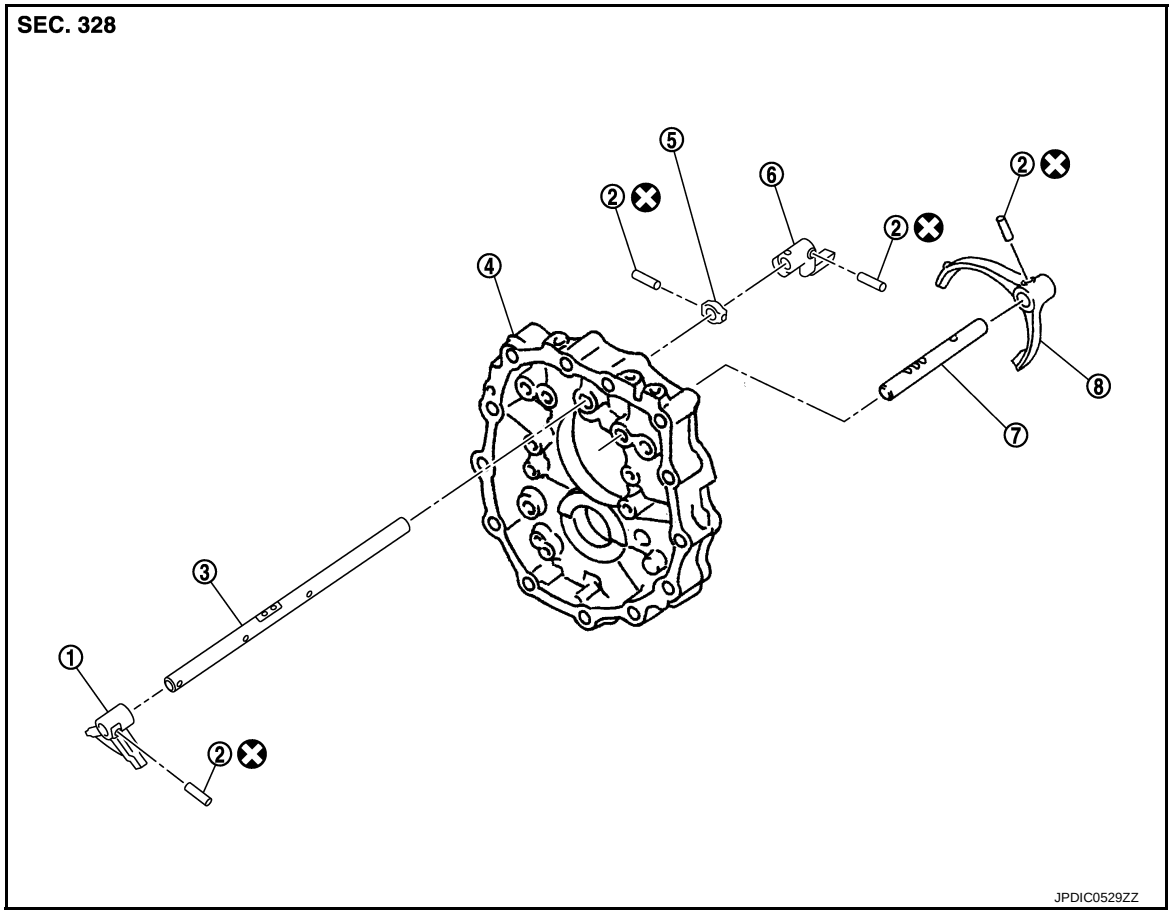

1. Striking lever
2. Retaining pin
3. Striking rod
4. Adapter plate
5. Stopper ring
6. Low/high control lever
7. Reverse fork rod
8. Reverse shift fork

Refer to GI-4, "Components" for the symbols in the figure.

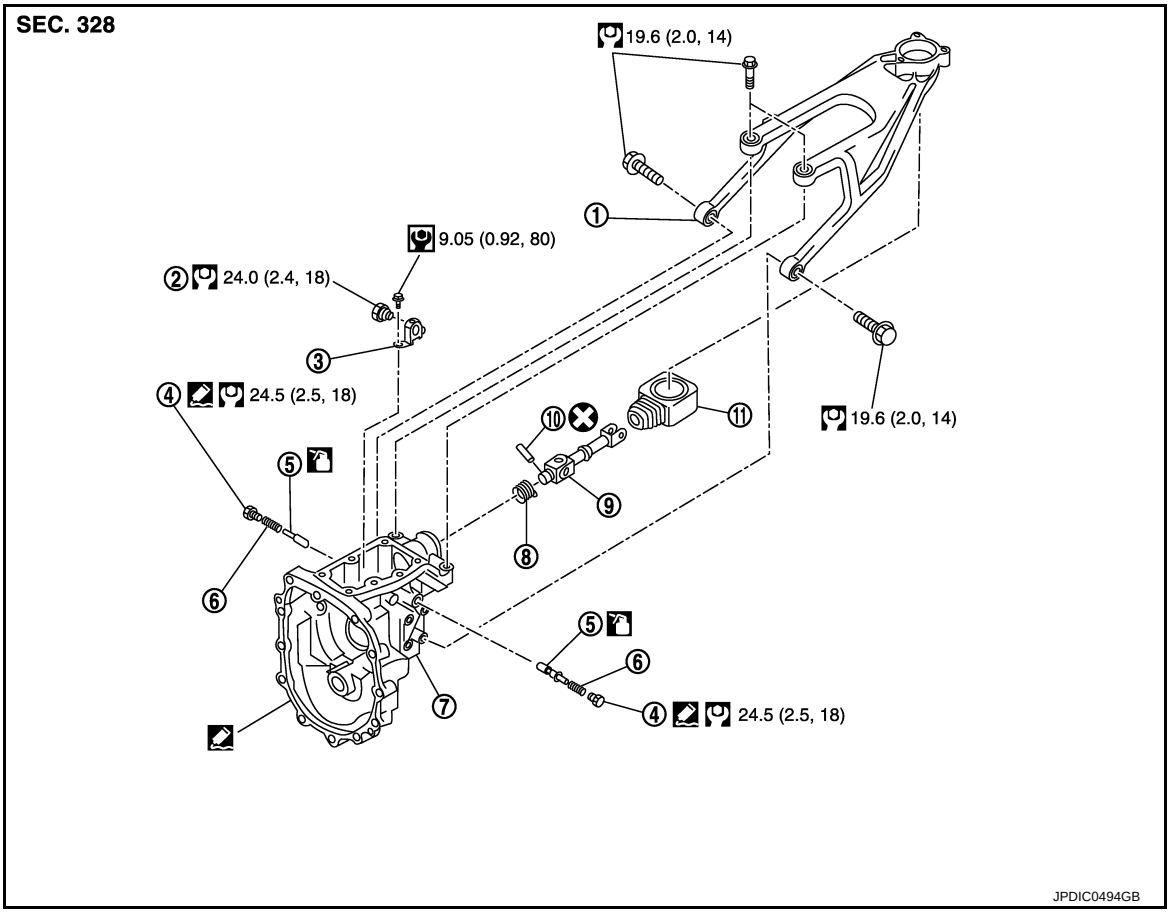

1. Control lever housing
2. Check shift pin
3. Control bracket
4. Return spring plug
5. Return spring plunger
6. Return spring
7. Rear extension
8. Boot
9. Control rod
10. Retaining pin
11. Control rod boot

: Apply gear oil.

: Apply Genuine Silicone RTV or an equivalent. Refer to GI-22, "Recommended Chemical Products and Sealants".

Refer to GI-4, "Components" for symbols not described on the above.

Disassembly

INFOID:0000000006207626

For disassembly procedures other than the following items, refer to “SHIFT FORK AND FORK ROD” in TM-38, "Disassembly".

CHECK SHIFT PIN

Set the control bracket to a vise and then remove check shift pin (1) from control bracket.

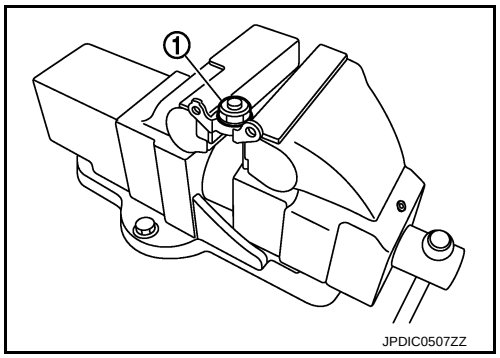

STRIKING ROD

1. Remove retaining pin (⬅) using a pin punch [Commercial service tool] and then remove stopper ring from striking rod.

⇦ : Transmission front

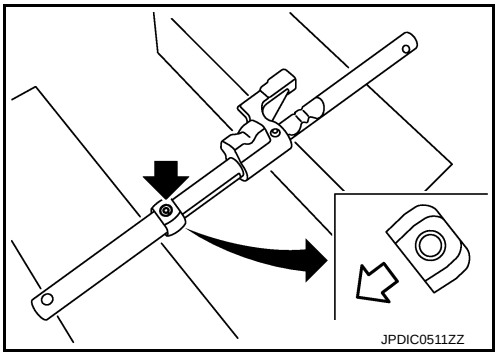

2. Remove retaining pin (⬅) using a pin punch [Commercial service tool] and then remove low/high control lever from striking rod.

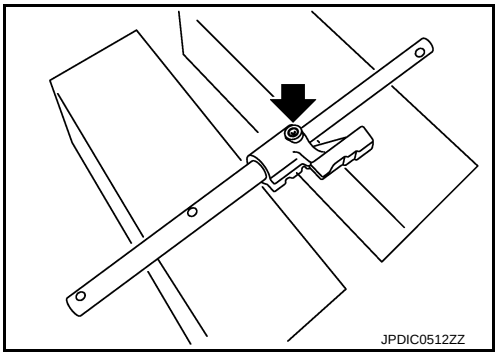

Assembly

INFOID:0000000006207627

For assembly procedures other than the following items, refer to “SHIFT FORK AND FORK ROD” in TM-46, "Assembly".

CHECK SHIFT PIN

1. Set the control bracket to a vise and then install check shift pin (1) to control bracket.
2. Tighten check shift pin to the specified torque.

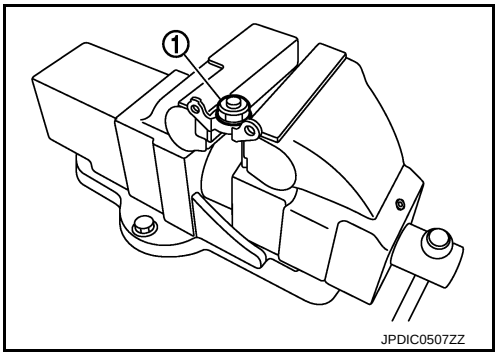

STRIKING ROD

1. Install low/high control lever to striking rod and then install retaining pin (⬅) to low/high control lever using a pin punch [Commercial service tool].

CAUTION:

- **Never reuse retaining pin.**
- **Be careful with the orientation of low/high control lever and striking rod.**
- **Assemble retaining pin from the direction shown by the arrow in the figure until it becomes flush with the end surface of low/high control lever.**

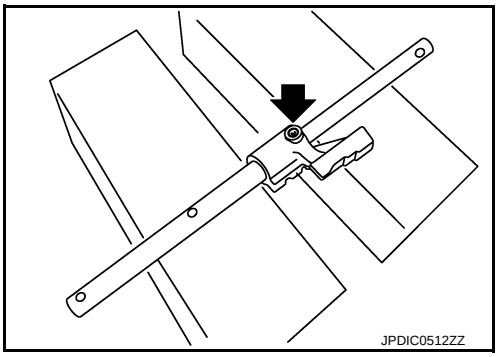

2. Install stopper ring to striking rod and then install retaining pin (⇦) to stopper ring using a pin punch [Commercial service tool].

⇦ : Transmission front

CAUTION:
- **Never reuse retaining pin.**
- **Be careful with the orientation of stopper ring and striking rod.**
- **Assemble retaining pin from the direction shown by the arrow in the figure until it becomes flush with the end surface of stopper ring.**

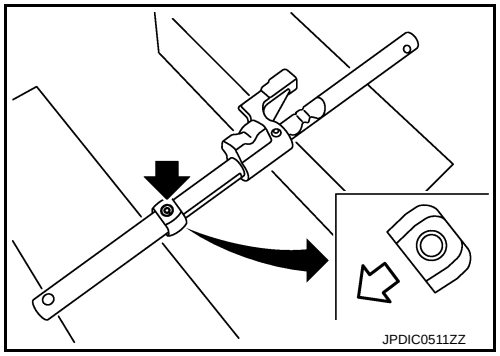

INFOID:0000000006207628

Inspection

INSPECTION AFTER DISASSEMBLY

Shift Fork and Fork Rod

- Check the contact surface of each forks, rods, levers, and brackets for excessive wear, uneven wear, bend, and damage. Replace if necessary.

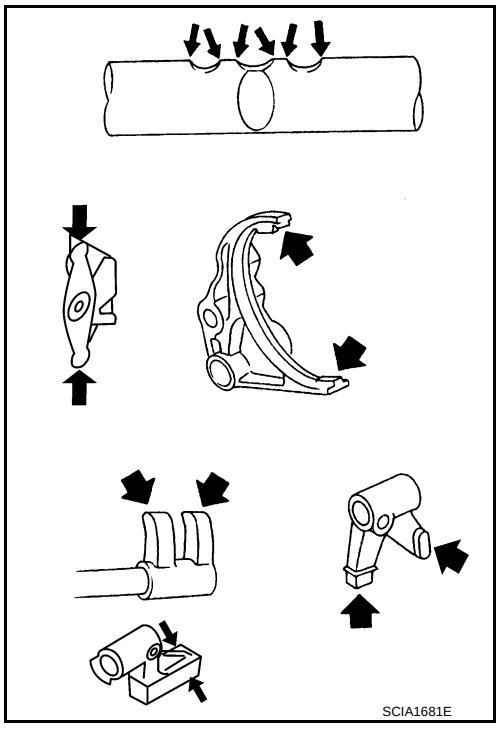

- Check if the width of shift fork hook (sliding area with coupling sleeve) is within allowable specification below.

One-side wear specification	**: Refer to TM-95, "Shift Fork".**
Sliding width of new part	**: Refer to TM-95, "Shift Fork".**

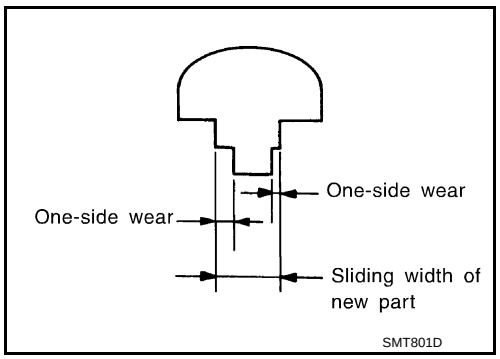

SERVICE DATA AND SPECIFICATIONS (SDS)

SERVICE DATA AND SPECIFICATIONS (SDS)

General Specifications

INFOID:0000000006207629

Transmission type			FS6R31A
Engine type			VQ37VHR
Axle type			2WD
Number of speed			6
Shift pattern			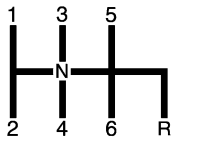 SCIA0955E
Synchromesh type			Warner
Gear ratio	1st		3.794
	2nd		2.324
	3rd		1.624
	4th		1.271
	5th		1.000
	6th		0.794
	Reverse		3.446
Number of teeth	Main gear	Drive	26
		1st	37
		2nd	34
		3rd	33
		4th	31
		6th	31
		Reverse	42
	Counter gear	Drive	32
		1st	12
		2nd	18
		3rd	25
		4th	30
		6th	48
		Reverse	15
	Reverse idler gear		26
Oil capacity		ℓ (US pt, Imp pt)	Approx. 2.83 (6,5)
Remarks	Reverse synchronizer		Installed
	Double cone synchronizer		4th
	Triple cone synchronizer		1st, 2nd, and 3rd

End Play

INFOID:0000000006207630

Unit: mm (in)

Item	Standard value
Counter shaft	0 – 0.1 (0 – 0.004)
Main drive gear	0 – 0.1 (0 – 0.004)
Mainshaft	0 – 0.1 (0 – 0.004)

Baulk Ring Clearance

INFOID:0000000006207631

Unit: mm (in)

Measurement point		Standard value	Limit value
4th (Double-cone synchronizer) 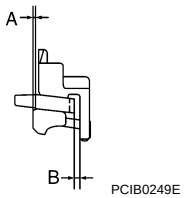	Clearance between synchronizer cone and inner baulk ring end face “A”	0.50 – 0.70 (0.020 – 0.028)	0.3 (0.012)
	Clearance between outer baulk ring pawl and synchronizer cone “B”	0.85 – 1.35 (0.033 – 0.053)	0.7 (0.028)
1st, 2nd, and 3rd (Triple-cone synchronizer) 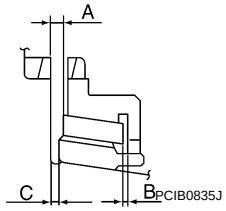	Clearance between synchronizer cone and clutch gear end face “A”	1st: 0.65 – 1.25 (0.026 – 0.049) 2nd: 0.60 – 1.30 (0.024 – 0.051) 3rd: 0.60 – 1.30 (0.024 – 0.051)	0.3 (0.012) 0.3 (0.012) 0.3 (0.012)
	Clearance between outer baulk ring pawl and synchronizer cone “B”	0.85 – 1.35 (0.033 – 0.053)	0.7 (0.028)
	Clearance between inner baulk ring and clutch gear end face “C”	1st: 0.80 – 1.2 (0.031 – 0.047) 2nd: 0.75 – 1.25 (0.030 – 0.049) 3rd: 0.75 – 1.25 (0.030 – 0.049)	0.3 (0.012) 0.3 (0.012) 0.3 (0.012)
5th and 6th		0.70 – 1.35 (0.028 – 0.053)	0.5 (0.020)
Reverse		0.75 – 1.20 (0.030 – 0.047)	0.5 (0.020)

Shift Fork

INFOID:0000000006207632

Unit: mm (in)

Measurement point		One-side wear specification	Sliding width of new part
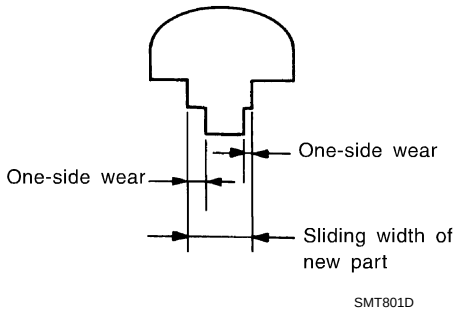	1st-2nd	0.2 (0.008)	7.80 – 7.93 (0.3071 – 0.3122)
	3rd-4th	0.2 (0.008)	7.80 – 7.93 (0.3071 – 0.3122)
	5th-6th	0.2 (0.008)	7.80 – 7.93 (0.3071 – 0.3122)
	Reverse	0.2 (0.008)	7.80 – 7.93 (0.3071 – 0.3122)

HOW TO USE THIS MANUAL

HOW TO USE THIS SECTION

How to Check A/T Type

INFOID:0000000007868314

Check the A/T type to confirm the service information in TM section.

Service information	A/T type	
	Input clutch dish plate	High and low reverse clutch dish plate
RE7R01A (TYPE 1)	Not installed	Not installed
RE7R01A (TYPE 2)	Installed	Installed

*: Refer to TM-407, "General Specification" for the application of each dish plate.

BASIC INSPECTION

DIAGNOSIS AND REPAIR WORK FLOW

Diagnosis Flow

INFOID:0000000006207633

1.OBTAIN INFORMATION ABOUT SYMPTOM

1. Refer to TM-98, "Question sheet" and interview the customer to obtain the malfunction information (conditions and environment when the malfunction occurred) as much as possible when the customer brings in the vehicle.
2. Check the following:

- Service history
- Harnesses and connectors malfunction. Refer to GI-43, "Intermittent Incident".

>> GO TO 2.

2.CHECK DTC

1. Before checking the malfunction, check whether any DTC exists.
2. If DTC exists, perform the following operations.

- Record the DTC and freeze frame data. (Print out the data using CONSULT-III and affix them to the Work Order Sheet.)
- Erase DTCs.
- Check the relationship between the cause that is clarified with DTC and the malfunction information described by the customer. TM-253, "Symptom Table" is effective.

3. Check the information of related service bulletins and others also.

Do malfunction information and DTC exist?

Malfunction information and DTC exists. >>GO TO 3.
Malfunction information exists, but no DTC. >>GO TO 4.
No malfunction information, but DTC exists. >>GO TO 5.

3.REPRODUCE MALFUNCTION SYMPTOM

Check any malfunction described by a customer, except those with DTC on the vehicle.
Also investigate whether the symptom is a fail-safe or normal operation. Refer to TM-246, "Fail-Safe".
When a malfunction symptom is reproduced, the question sheet is effective. Refer to TM-98, "Question sheet".
Verify the relationship between the symptom and the conditions in which the malfunction described by the customer occurs.

>> GO TO 5.

4.REPRODUCE MALFUNCTION SYMPTOM

Check the malfunction described by the customer on the vehicle.
Also investigate whether the symptom is a fail-safe or normal operation. Refer to TM-246, "Fail-Safe".
When a malfunction symptom is reproduced, the question sheet is effective. Refer to TM-98, "Question sheet".
Verify the relationship between the symptom and the conditions in which the malfunction described by the customer occurs.

>> GO TO 6.

5.PERFORM “DTC CONFIRMATION PROCEDURE”

Perform “DTC CONFIRMATION PROCEDURE” of the appropriate DTC to check if DTC is detected again.
Refer to TM-250, "DTC Inspection Priority Chart" when multiple DTCs are detected, and then determine the order for performing the diagnosis.

NOTE:
If no DTC is detected, refer to the freeze frame data.

Is any DTC detected?

YES >> GO TO 7.
NO >> Check according to GI-43, "Intermittent Incident".

6. IDENTIFY MALFUNCTIONING SYSTEM WITH “DIAGNOSIS CHART BY SYMPTOM”

Use TM-253, "Symptom Table" from the symptom inspection result in step 4. Then identify where to start performing the diagnosis based on possible causes and symptoms.

>> GO TO 8.

7. REPAIR OR REPLACE THE MALFUNCTIONING PARTS

Repair or replace the detected malfunctioning parts.
Reconnect parts or connector after repairing or replacing, and then erase DTC if necessary.

>> GO TO 8.

8. FINAL CHECK

Perform “DTC CONFIRMATION PROCEDURE” again to make sure that the repair is correctly performed.
Check that malfunctions are not reproduced when obtaining the malfunction information from the customer, referring to the symptom inspection result in step 3 or 4.

Is DTC or malfunction symptom reproduced?

YES-1 >> DTC is reproduced: GO TO 5.
YES-2 >> Malfunction symptom is reproduced: GO TO 6.
NO >> Before delivering the vehicle to the customer, make sure that DTC is erased.

Question sheet

INFOID:0000000006207634

DESCRIPTION

There are many operating conditions that may cause a malfunction of the transmission parts. By understanding those conditions properly, a quick and exact diagnosis can be achieved.
In general, customers have their own criteria for a problem. Therefore, it is important to understand the symptom and status well enough by asking the customer about the concerns carefully. In order to systemize all the information for the diagnosis, prepare the question sheet referring to the question points.

KEY POINTS

WHAT ..... Vehicle & engine model
WHEN ..... Date, Frequencies
WHERE..... Road conditions
HOW ..... Operating conditions, Weather conditions, Symptoms

SEF907L

WORKSHEET SAMPLE

Question Sheet					
Customer name MR/MS		Engine #		Manuf. Date	
		Incident Date		VIN	
		Model & Year		In Service Date	
		Trans.		Mileage	km / Mile

Question Sheet						
Symptoms		☐ Vehicle does not move (☐ Any position ☐ Particular position)				
		☐ No up-shift (☐ 1GR → 2GR ☐ 2GR → 3GR ☐ 3GR → 4GR ☐ 4GR → 5GR ☐ 5GR → 6GR ☐ 6GR → 7GR)				
		☐ No down-shift (☐ 7GR → 6GR ☐ 6GR → 5GR ☐ 5GR → 4GR ☐ 4GR → 3GR ☐ 3GR → 2GR ☐ 2GR → 1GR)				
		☐ Lock-up malfunction				
		☐ Shift point too high or too low				
		☐ Shift shock or slip				
		☐ Noise or vibration				
		☐ No kick down				
		☐ No pattern select				
		☐ Others				
Frequency		☐ All the time	☐ Under certain conditions	☐ Sometimes (times a day)		
Weather conditions		☐ Not affected				
	Weather	☐ Fine	☐ Clouding	☐ Raining	☐ Snowing	☐ Other ( )
	Temp.	☐ Hot	☐ Warm	☐ Cool	☐ Cold	☐ Temp. [Approx. °C (°F)]
	Humidity	☐ High	☐ Middle	☐ Low		
Transmission conditions		☐ Not affected				
		☐ Cold	☐ During warm-up	☐ After warm-up		
		☐ Engine speed (rpm)				
Road conditions		☐ Not affected				
		☐ In town	☐ In suburbs	☐ Freeway	☐ Off road (Up / Down)	
Driving conditions		☐ Not affected				
		☐ At starting	☐ While idling	☐ While engine racing	☐ At racing	☐ While cruising
		☐ While accelerating	☐ While decelerating	☐ While turning (Right / Left)		
		☐ Vehicle speed [km/h (MPH)]				
Other conditions						

SYSTEM DESCRIPTION

A/T CONTROL SYSTEM

System Diagram

INFOID:0000000006207635

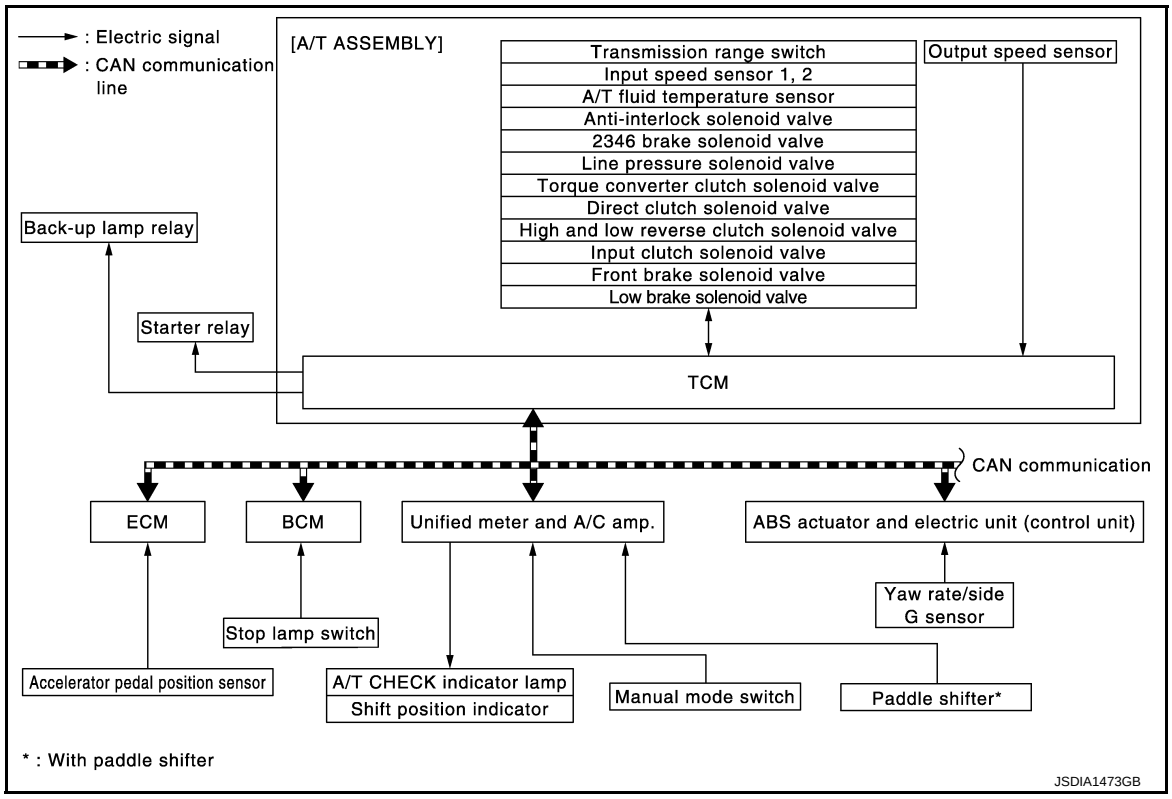

System Description

INFOID:0000000006207636

INPUT/OUTPUT SIGNAL CHART

Sensor (or signal)		TCM function		Actuator
Transmission range switch Accelerator pedal position signal Closed throttle position signal Wide open throttle position signal Engine speed signal A/T fluid temperature sensor Output speed sensor Vehicle speed signal Manual mode switch signal Stop lamp switch signal Side G sensor signal Input speed sensor 1, 2	⇒	Line pressure control (TM-103) Shift change control (TM-107) Shift pattern control • ASC (Adaptive shift control) (TM-112) • Manual mode (TM-116) Lock-up control (TM-119) Fail-safe control (TM-246) Self-diagnosis (TM-151) CONSULT-III communication line (TM-151) CAN communication line (TM-158)	⇒	Input clutch solenoid valve Direct clutch solenoid valve Front brake solenoid valve High and low reverse clutch solenoid valve Low brake solenoid valve Torque converter clutch solenoid valve Line pressure solenoid valve Anti-interlock solenoid valve 2346 brake solenoid valve A/T CHECK indicator lamp Back-up lamp relay Starter relay

SYSTEM DESCRIPTION

- The A/T senses vehicle operating conditions through various sensors or signals. It always controls the optimum shift position and reduces shifting and lock-up shocks.
- Receive input signals transmitted from various switches and sensors.
- Determine required line pressure, shifting point, lock-up operation, etc.
- Transmit required output signals to the respective solenoids.

Component Parts Location

INFOID:0000000006207637

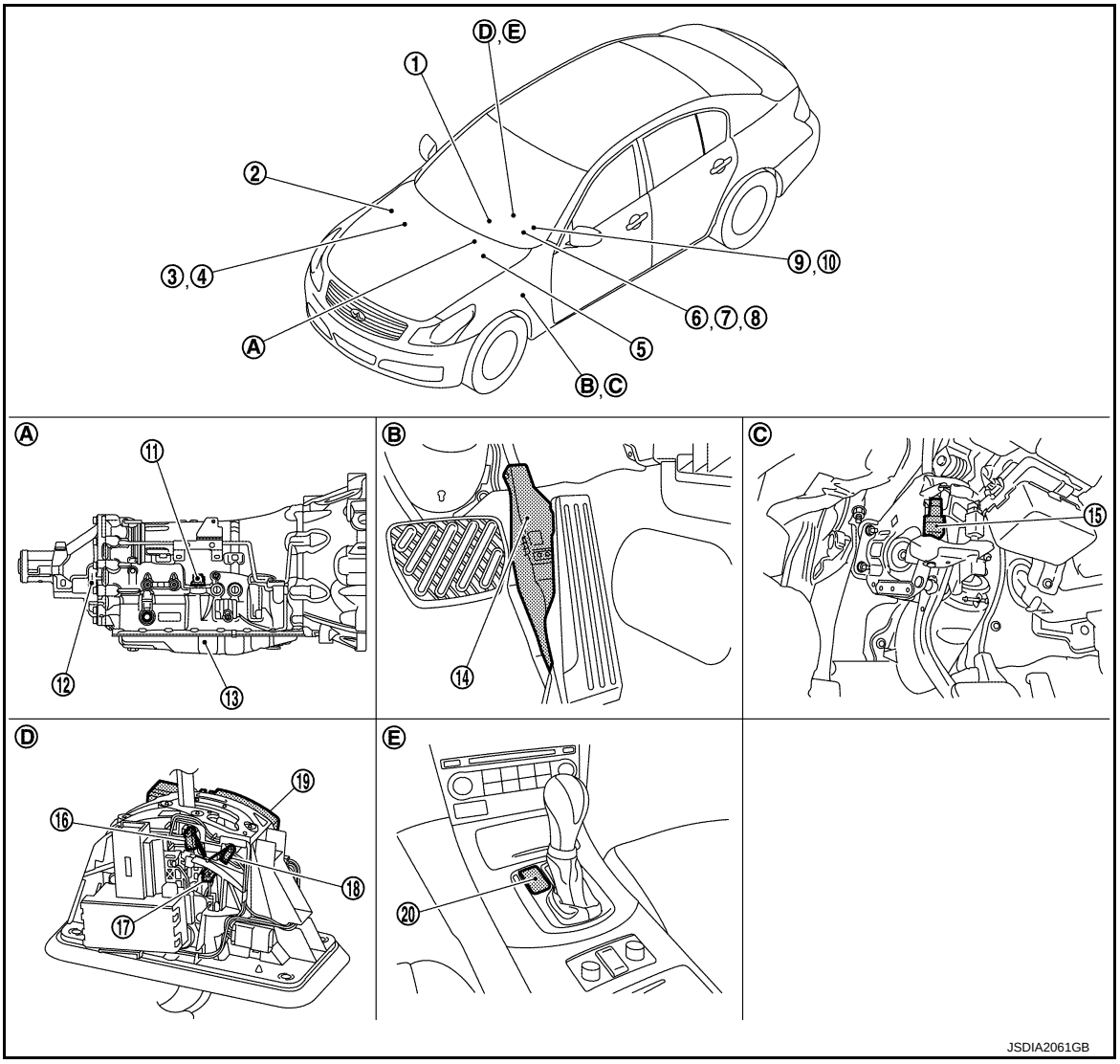

1. Unified meter and A/C amp. Refer to MWI-10, "METER SYSTEM : Component Parts Location".
2. IPDM E/R Refer to PCS-5, "Component Parts Location".
3. ECM Refer to EC-45, "Component Parts Location" (VQ37VHR) or EC-665, "Component Parts Location" (VQ25HR).
4. BCM Refer to BCS-6, "Component Parts Location".
5. ABS actuator and electric unit (control unit) Refer to BRC-11, "Component Parts Location".
6. A/T CHECK indicator lamp (On the combination meter)
7. Shift position indicator (On the combination meter)
8. Manual mode indicator (On the combination meter)
9. Paddle shifter (shift-down)*1
10. Paddle shifter (shift-down)*1
11. A/T assembly connector
12. Output speed sensor*2
13. Control valve & TCM*3
14. Accelerator pedal position signal
15. Stop lamp switch
16. Manual mode position select switch (shift-up)
17. Manual mode select switch
18. Manual mode position select switch (shift-down)
19. Shift position switch
20. Selector lever position indicator
- A. A/T assembly
- B. Accelerator pedal, upper
- C. Brake pedal, upper
- D. A/T shift selector assembly
- E. Center console

*1 : With paddle shifter

*2 : Output speed sensor is installed in A/T assembly.

*3 : Control valve & TCM is installed in A/T assembly.

NOTE:
The following components are included in control valve & TCM (13).
- TCM
- Input speed sensor 1, 2
- A/T fluid temperature sensor
- Transmission range switch
- Direct clutch solenoid valve
- High and low reverse clutch solenoid valve
- Input clutch solenoid valve
- Front brake solenoid valve
- Low brake solenoid valve
- Anti-interlock solenoid valve
- 2346 brake solenoid valve
- Line pressure solenoid valve
- Torque converter clutch solenoid valve

Component Description

INFOID:0000000006207638

Name	Function
TCM	The TCM consists of a microcomputer and connectors for signal input and output and for power supply. The TCM controls the A/T.
Transmission range switch	TM-161, "Description"
Output speed sensor	TM-167, "Description"
Input speed sensor 1	TM-165, "Description"
Input speed sensor 2	
A/T fluid temperature sensor	TM-163, "Description"
Input clutch solenoid valve	TM-191, "Description"
Front brake solenoid valve	TM-194, "Description"
Direct clutch solenoid valve	TM-212, "Description"
High and low reverse clutch solenoid valve	TM-209, "Description"
Low brake solenoid valve	TM-210, "Description"
Anti-interlock solenoid valve	TM-190, "Description"
2346 brake solenoid valve	TM-211, "Description"
Torque converter clutch solenoid valve	TM-185, "Description"
Line pressure solenoid valve	TM-189, "Description"
Accelerator pedal position sensor	TM-195, "Description"
Throttle position sensor	
Manual mode switch	TM-203, "Description"
Paddle shifter*	TM-203, "Description"
Starter relay	TM-159, "Description"
A/T CHECK indicator lamp	When the ignition switch is pushed to the ON position, the light comes on for 2 seconds.
Stop lamp switch	TM-216, "Description"
ECM	EC-664, "System Description" (VQ25HR), EC-45, "System Description" (VQ37VHR)
BCM	BCS-5, "System Description"
Unified meter and A/C amp.	MWI-6, "METER SYSTEM : System Description"
ABS actuator and electric unit (control unit)	BRC-18, "System Description"
Yaw rate/side G sensor	BRC-66, "Description"

*: With paddle shifter

LINE PRESSURE CONTROL

System Diagram

INFOID:0000000006207639

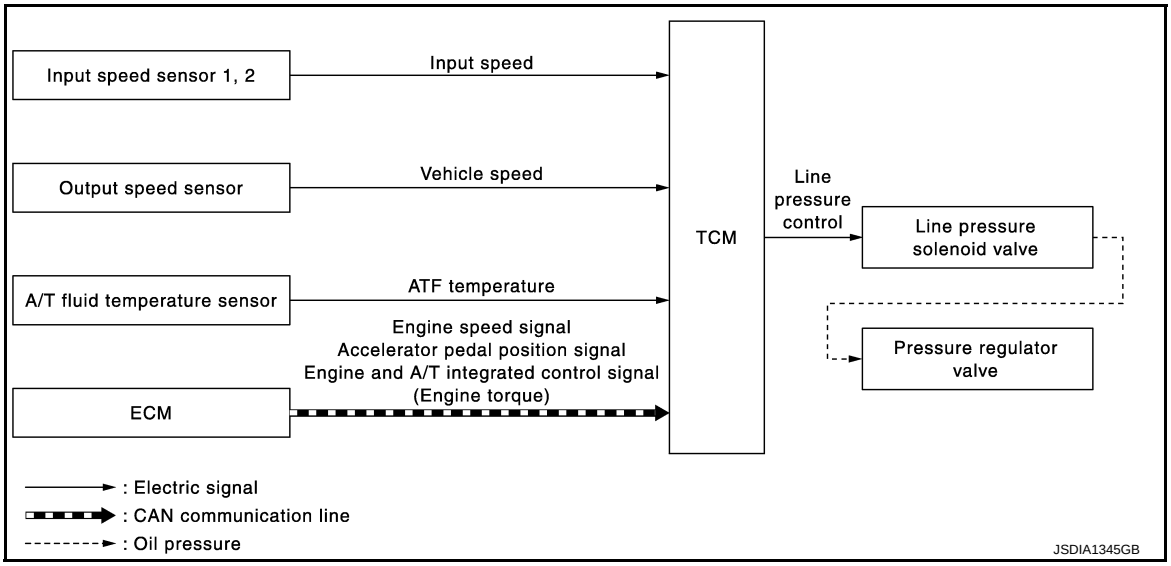

System Description

INFOID:0000000006207640

SYSTEM DESCRIPTION

- When an engine and A/T integrated control signal (engine torque) equivalent to the engine drive force is transmitted from the ECM to the TCM, the TCM controls the line pressure solenoid valve.
  This line pressure solenoid controls the pressure regulator valve as the signal pressure and adjusts the pressure of the operating oil discharged from the oil pump to the line pressure most appropriate to the driving state.
- The TCM has stored in memory a number of patterns for the optimum line pressure characteristic for the driving state.
- In order to obtain the most appropriate line pressure characteristic to meet the current driving state, the TCM controls the line pressure solenoid current value and thus controls the line pressure.

Normal Control

Each clutch is adjusted to the necessary pressure to match the engine drive force.

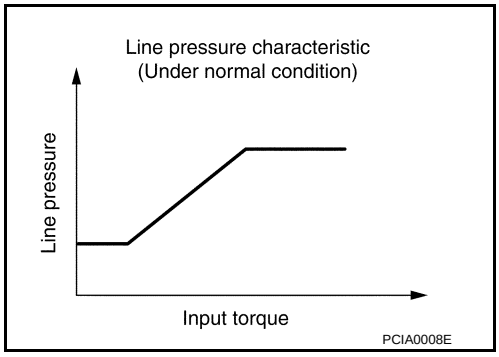

Back-up Control (Engine Brake)

When the select operation is performed during driving and the A/T is shifted down, the line pressure is set according to the vehicle speed.

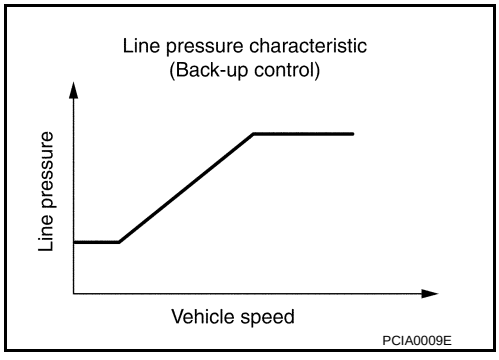

During Shift Change

The necessary and adequate line pressure for shift change is set. For this reason, line pressure pattern setting corresponds to engine torque and gearshift selection. Also, line pressure characteristic corresponds to engine speed, during engine brake operation.

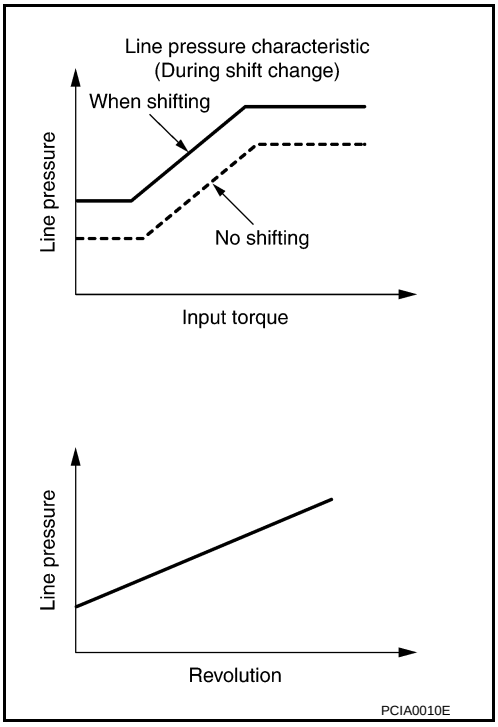

At Low Fluid Temperature

When the A/T fluid temperature drops below the prescribed temperature, in order to speed up the action of each friction element, the line pressure is set higher than the normal line pressure characteristic.

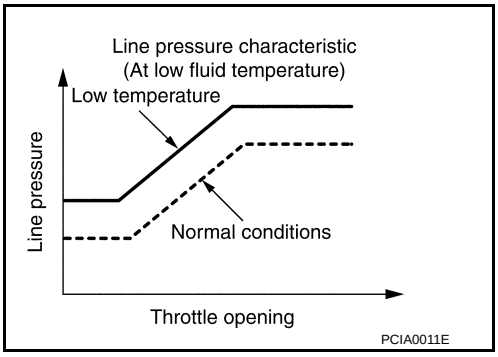

Component Parts Location

INFOID:0000000006598763

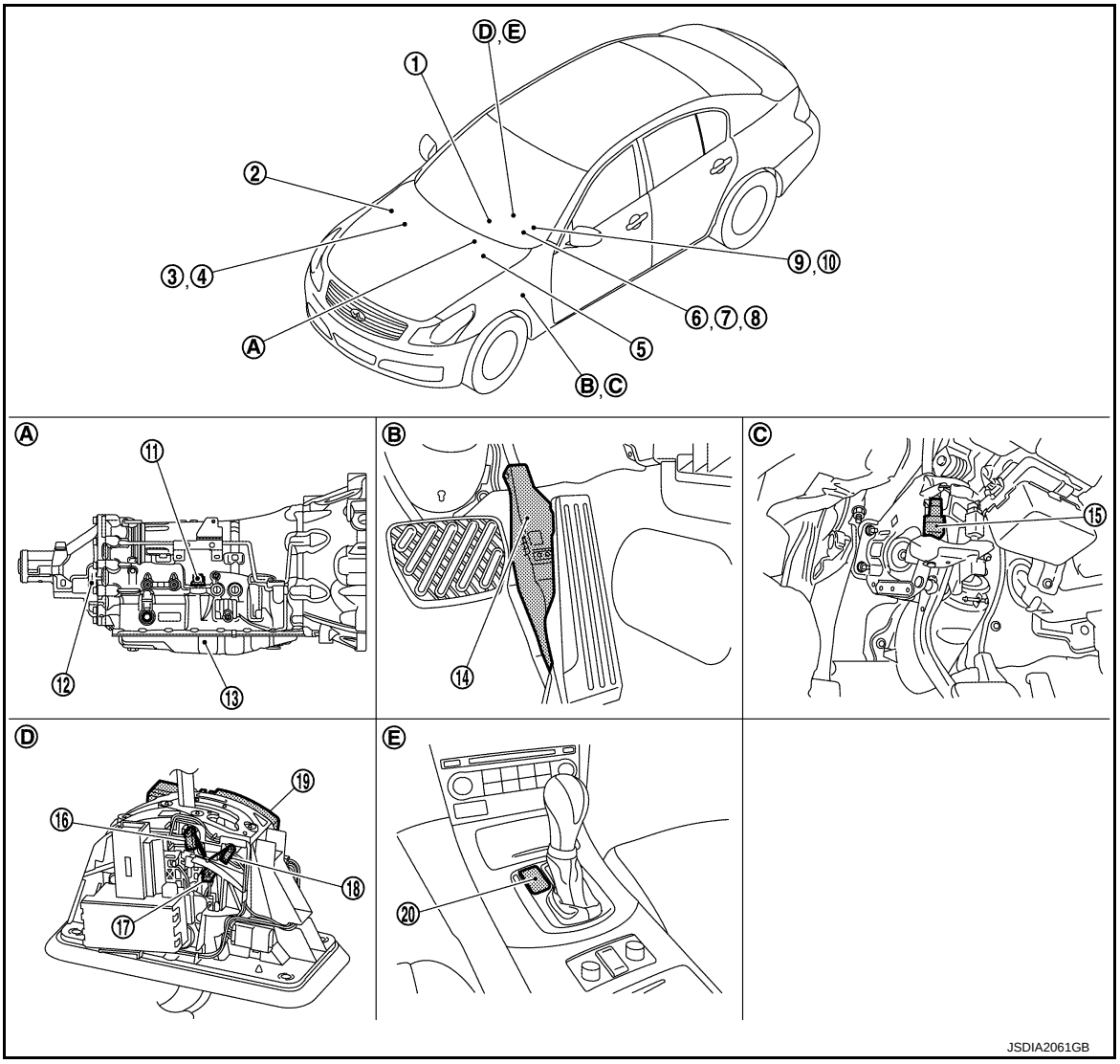

1. Unified meter and A/C amp. Refer to MWI-10, "METER SYSTEM : Component Parts Location".
2. IPDM E/R Refer to PCS-5, "Component Parts Location".
3. ECM Refer to EC-45, "Component Parts Location" (VQ37VHR) or EC-665, "Component Parts Location" (VQ25HR).
4. BCM Refer to BCS-6, "Component Parts Location".
5. ABS actuator and electric unit (control unit) Refer to BRC-11, "Component Parts Location".
6. A/T CHECK indicator lamp (On the combination meter)
7. Shift position indicator (On the combination meter)
8. Manual mode indicator (On the combination meter)
9. Paddle shifter (shift-down)*1
10. Paddle shifter (shift-down)*1
11. A/T assembly connector
12. Output speed sensor*2
13. Control valve & TCM*3
14. Accelerator pedal position signal
15. Stop lamp switch
16. Manual mode position select switch (shift-up)
17. Manual mode select switch
18. Manual mode position select switch (shift-down)
19. Shift position switch
20. Selector lever position indicator

A. A/T assembly
B. Accelerator pedal, upper
C. Brake pedal, upper
D. A/T shift selector assembly
E. Center console

*1 : With paddle shifter

*2 : Output speed sensor is installed in A/T assembly.

*3 : Control valve & TCM is installed in A/T assembly.

NOTE:

The following components are included in control valve & TCM (13).

- TCM
- Input speed sensor 1, 2
- A/T fluid temperature sensor
- Transmission range switch
- Direct clutch solenoid valve
- High and low reverse clutch solenoid valve
- Input clutch solenoid valve
- Front brake solenoid valve
- Low brake solenoid valve
- Anti-interlock solenoid valve
- 2346 brake solenoid valve
- Line pressure solenoid valve
- Torque converter clutch solenoid valve

Component Description

INFOID:0000000006207642

Name	Function
TCM	The TCM consists of a microcomputer and connectors for signal input and output and for power supply. The TCM controls the A/T.
Output speed sensor	TM-167, "Description"
Input speed sensor 1	TM-165, "Description"
Input speed sensor 2	
A/T fluid temperature sensor	TM-163, "Description"
Line pressure solenoid valve	TM-189, "Description"
Pressure regulator valve	Adjusts the oil discharged from the oil pump to the optimum pressure (line pressure) for the driving state.
ECM	EC-664, "System Description" (VQ25HR), EC-45, "System Description" (VQ37VHR)

SHIFT CHANGE CONTROL

System Diagram

INFOID:0000000006207643

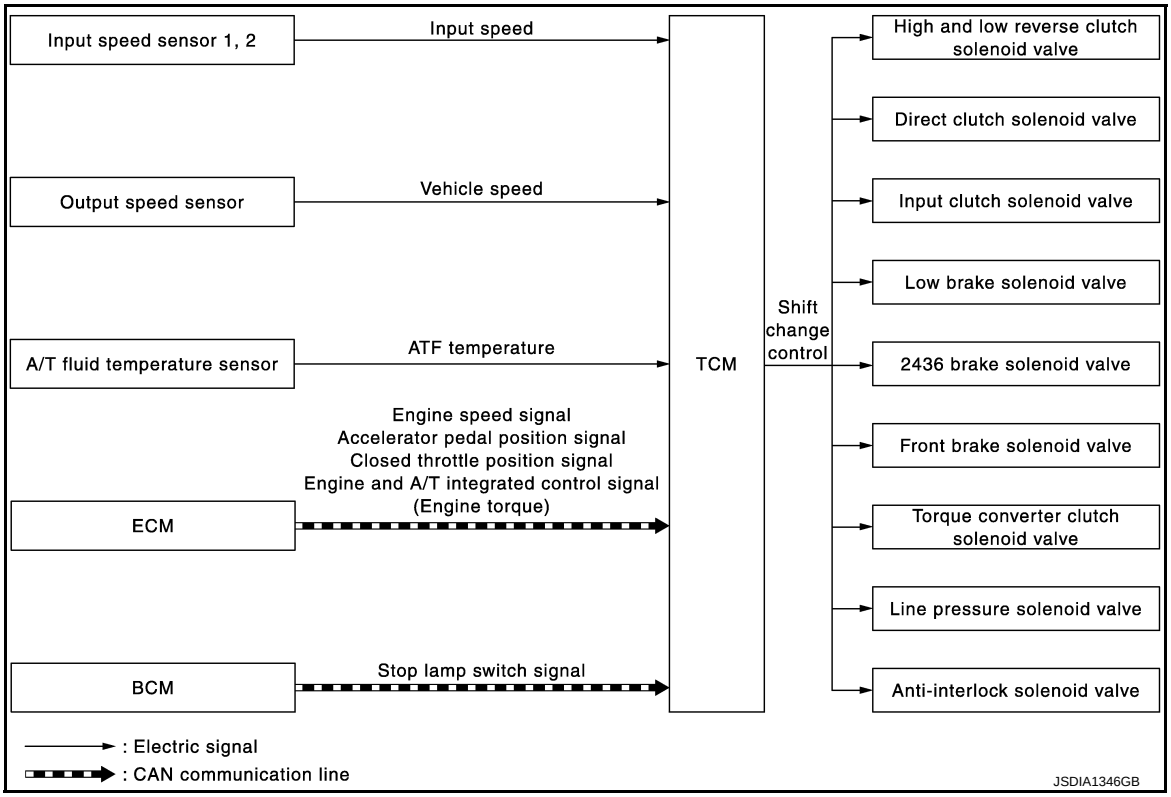

System Description

INFOID:0000000006207644

SYSTEM DESCRIPTION

The clutch pressure control solenoid is controlled by the signals from the switches and sensors. Thus, the clutch pressure is adjusted to be appropriate to the engine load state and vehicle driving state. It becomes possible to finely control the clutch hydraulic pressure with high precision and a smoother shift change characteristic is attained.

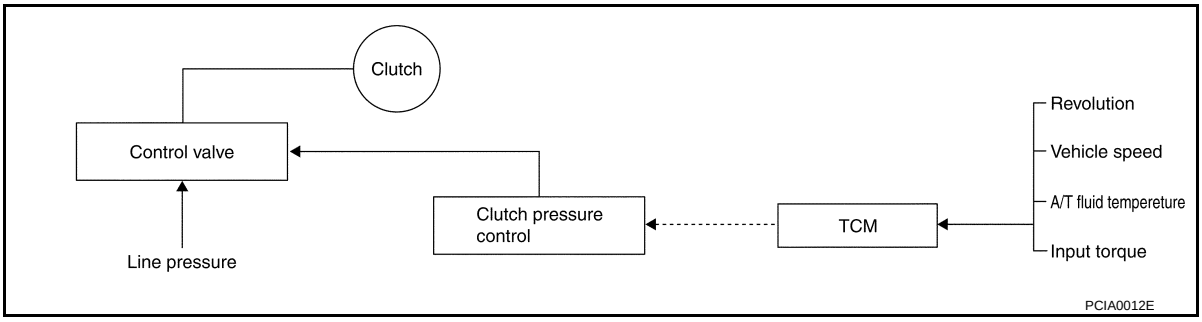

Shift Change

The clutch is controlled with the optimum timing and oil pressure by the engine speed, engine torque information, etc.

Shift Change System Diagram

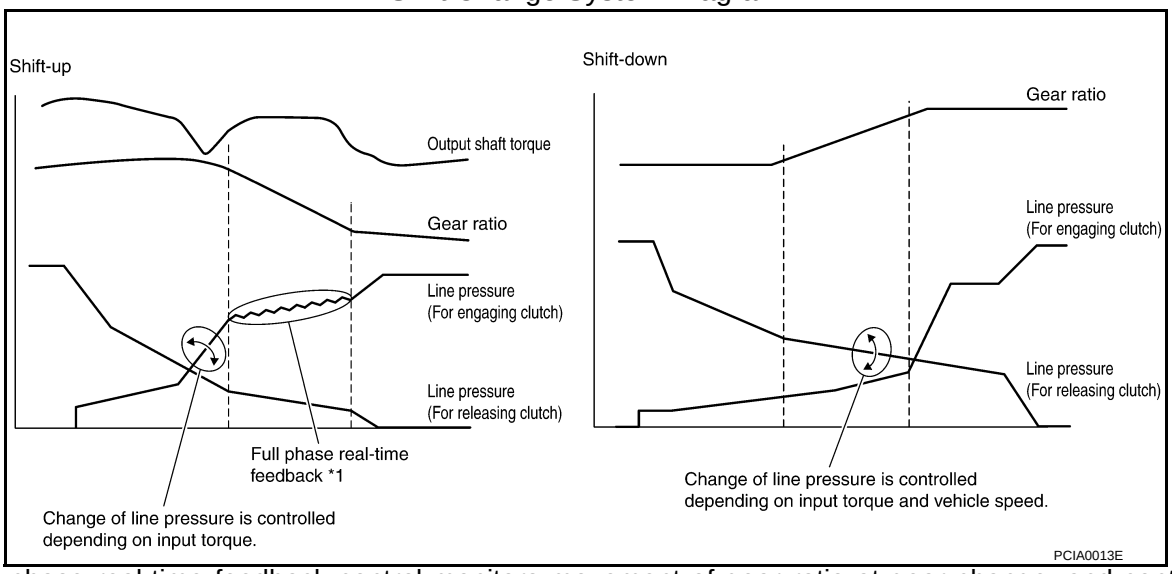

*1: Full phase real-time feedback control monitors movement of gear ratio at gear change, and controls oil pressure in real-time to achieve the best gear ratio.

Blipping Control

It controls (synchronizes) engine speed to have a quick shift clutch coupling, by calculating engine speed after downshifting and by cooperating with ASC (Adaptive Shift Control).

- "BLIPPING CONTROL" functions.
- When downshifting by accelerator pedal depression.
- When downshifting by the manual mode.
- It works on shift-down operation by ASC at high speed side when driving at D position or in DS mode.

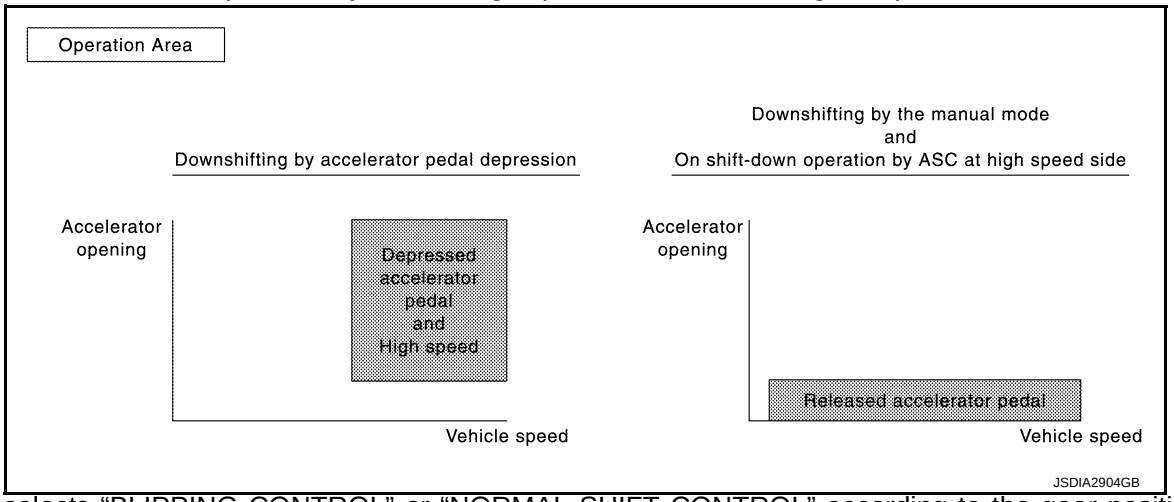

- TCM selects "BLIPPING CONTROL" or "NORMAL SHIFT CONTROL" according to the gear position, the selector lever position, the engine torque and the speed when accelerating by pedal depression.
- Engine speed control demand signal is transmitted from TCM to ECM under "BLIPPING CONTROL".
- ECM synchronizes the engine speed according to the engine speed control demand signal.

Downshifting by accelerator pedal depression

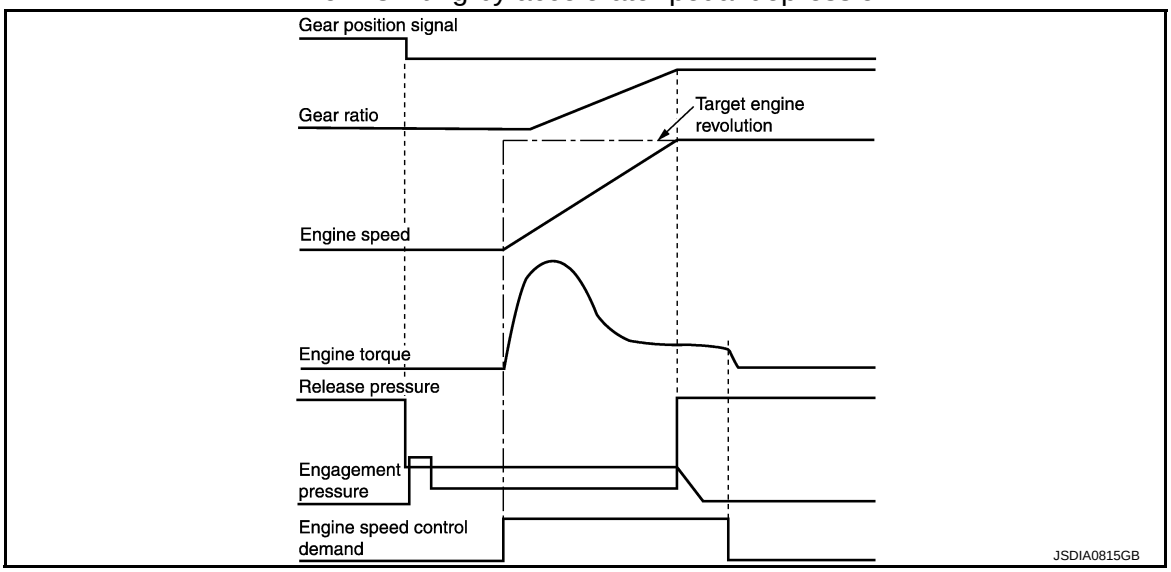

Downshifting by the manual mode and On shift-down operation by ASC at high speed side

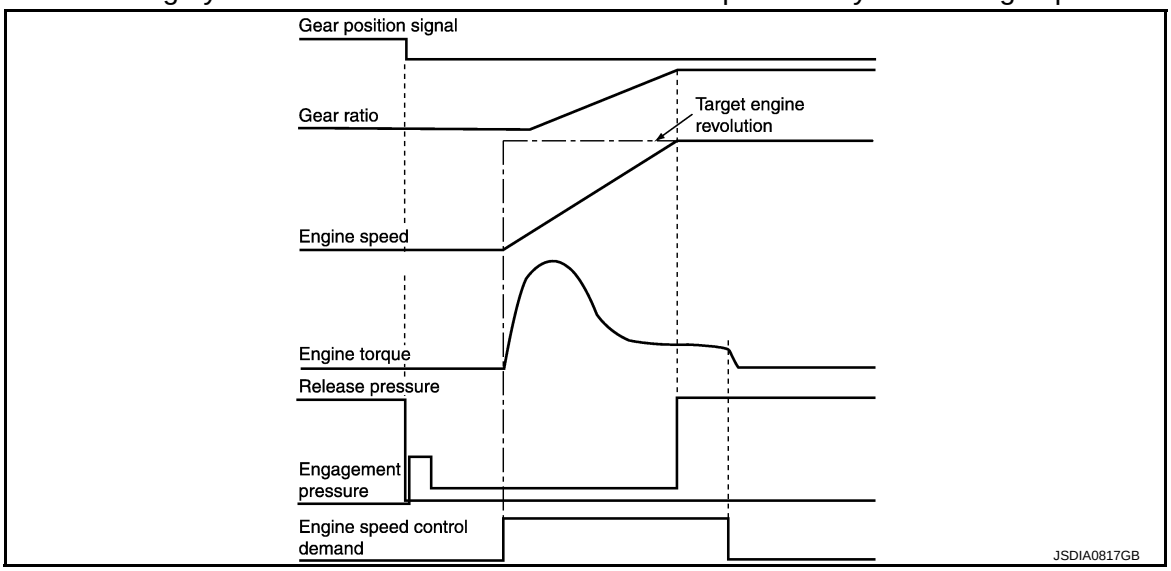

Component Parts Location

INFOID:0000000006598765

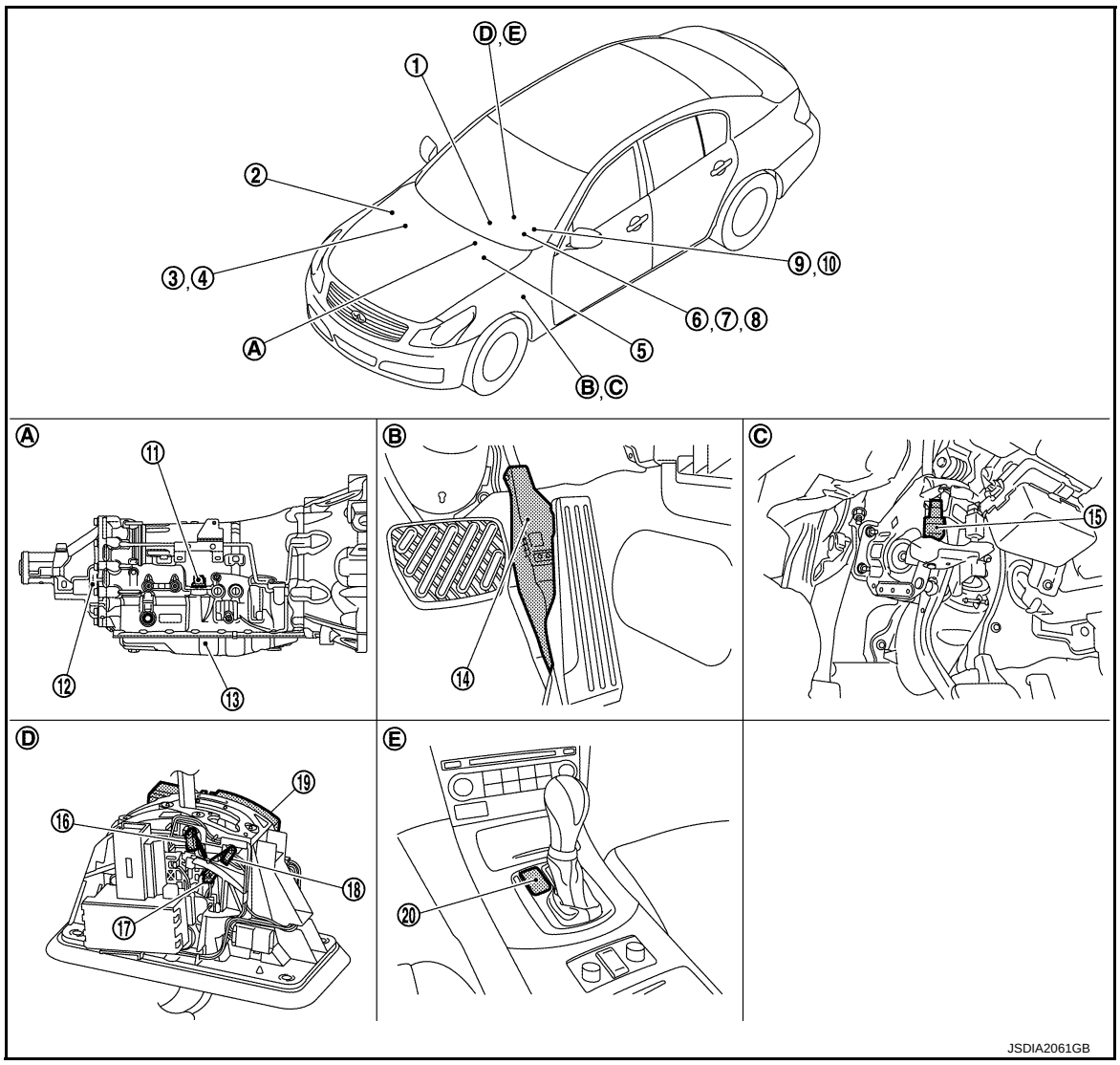

1. Unified meter and A/C amp. Refer to MWI-10, "METER SYSTEM : Component Parts Location".
2. IPDM E/R Refer to PCS-5, "Component Parts Location".
3. ECM Refer to EC-45, "Component Parts Location" (VQ37VHR) or EC-665, "Component Parts Location" (VQ25HR).
4. BCM Refer to BCS-6, "Component Parts Location".
5. ABS actuator and electric unit (control unit) Refer to BRC-11, "Component Parts Location".
6. A/T CHECK indicator lamp (On the combination meter)
7. Shift position indicator (On the combination meter)
8. Manual mode indicator (On the combination meter)
9. Paddle shifter (shift-down)*1
10. Paddle shifter (shift-down)*1
11. A/T assembly connector
12. Output speed sensor*2
13. Control valve & TCM*3
14. Accelerator pedal position signal
15. Stop lamp switch
16. Manual mode position select switch (shift-up)
17. Manual mode select switch
18. Manual mode position select switch (shift-down)
19. Shift position switch
20. Selector lever position indicator
A. A/T assembly
B. Accelerator pedal, upper
C. Brake pedal, upper
D. A/T shift selector assembly
E. Center console

*1 : With paddle shifter

*2 : Output speed sensor is installed in A/T assembly.

*3 : Control valve & TCM is installed in A/T assembly.

NOTE:

The following components are included in control valve & TCM (13).

- TCM
- Input speed sensor 1, 2
- A/T fluid temperature sensor
- Transmission range switch
- Direct clutch solenoid valve
- High and low reverse clutch solenoid valve
- Input clutch solenoid valve
- Front brake solenoid valve
- Low brake solenoid valve
- Anti-interlock solenoid valve
- 2346 brake solenoid valve
- Line pressure solenoid valve
- Torque converter clutch solenoid valve

Component Description

INFOID:0000000006207646

Name	Function
TCM	The TCM consists of a microcomputer and connectors for signal input and output and for power supply. The TCM controls the A/T.
Output speed sensor	TM-167, "Description"
Input speed sensor 1	TM-165, "Description"
Input speed sensor 2	
A/T fluid temperature sensor	TM-163, "Description"
Input clutch solenoid valve	TM-191, "Description"
Front brake solenoid valve	TM-194, "Description"
Direct clutch solenoid valve	TM-212, "Description"
High and low reverse clutch solenoid valve	TM-209, "Description"
Low brake solenoid valve	TM-210, "Description"
Anti-interlock solenoid valve	TM-190, "Description"
2346 brake solenoid valve	TM-211, "Description"
Line pressure solenoid valve	TM-189, "Description"
Torque converter clutch solenoid valve	TM-185, "Description"
ECM	EC-664, "System Description" (VQ25HR), EC-45, "System Description" (VQ37VHR)
BCM	BCS-5, "System Description"

SHIFT PATTERN CONTROL
ASC (ADAPTIVE SHIFT CONTROL)

ASC (ADAPTIVE SHIFT CONTROL) : System Diagram

INFOID:0000000006207647

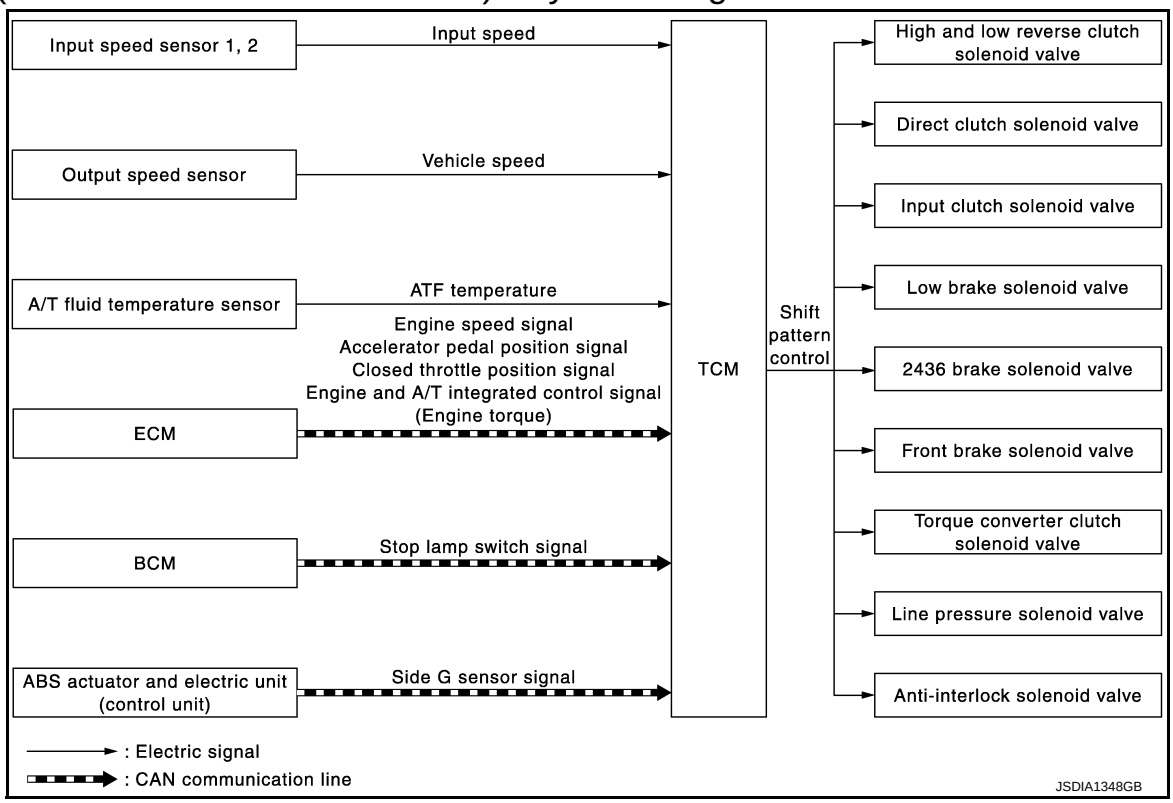

ASC (ADAPTIVE SHIFT CONTROL) : System Description

INFOID:0000000006207648

SYSTEM DESCRIPTION

It automatically selects the shift pattern (such as road environment and driving style) suitable for the various situations so as to allow the vehicle to be driven efficiently and smoothly.

When Driving on an Up/Down Slope

ASC judges up/down slope according to engine torque data transmitted from the ECM and vehicle speed. Fixing at 4GR, 5GR or 6GR on an up-slope prevents shift hunting and controls the vehicle to gain optimum driving force. On a down-slope, automatic shift-down to 4GR, 5GR or 6GR gear controls to gain optimum engine brake.

When Driving on a Curve

- In driving condition where acceleration, deceleration, or lateral acceleration continues, it corrects gear selection in order to keep a smooth vehicle speed during the curve and to give an adequate driving force at the curve end.
- When acceleration pedal is quickly released at curve entrance etc, it prevents an unnecessary shift-up.
- On braking operation at curve entrance, it gives an early shift-down according to the deceleration.
- In a sporty driving condition, it selects lower gear early even on a light braking operation, giving greater importance on driving force.

- TCM receives the side G sensor signal from the ABS actuator and electric unit (control unit). It locks to 4GR, 5GR or 6GR position in moderate cornering or to 3GR position in sharp cornering based on this signal. This prevents any upshift and kick down during cornering, maintaining smooth vehicle travel.

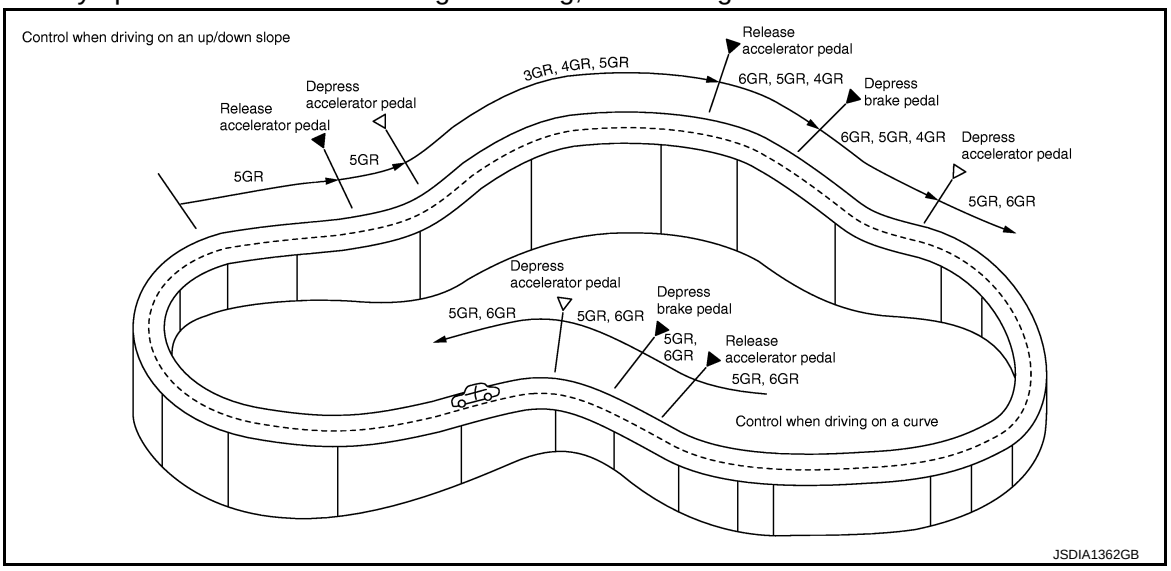

DS Mode

- Changes to the shift schedule that mainly utilizes the high engine speed zone when ASC is active.
- DS mode can be switched according to the following method.
- When the selector lever is in the “D” position, shifting the selector lever to manual shift gate enables switching to DS mode.
- When in DS mode, shifting the selector lever to the main shift gate enables to cancel DS mode.

ASC (ADAPTIVE SHIFT CONTROL) : Component Parts Location

INFOID:0000000006598766

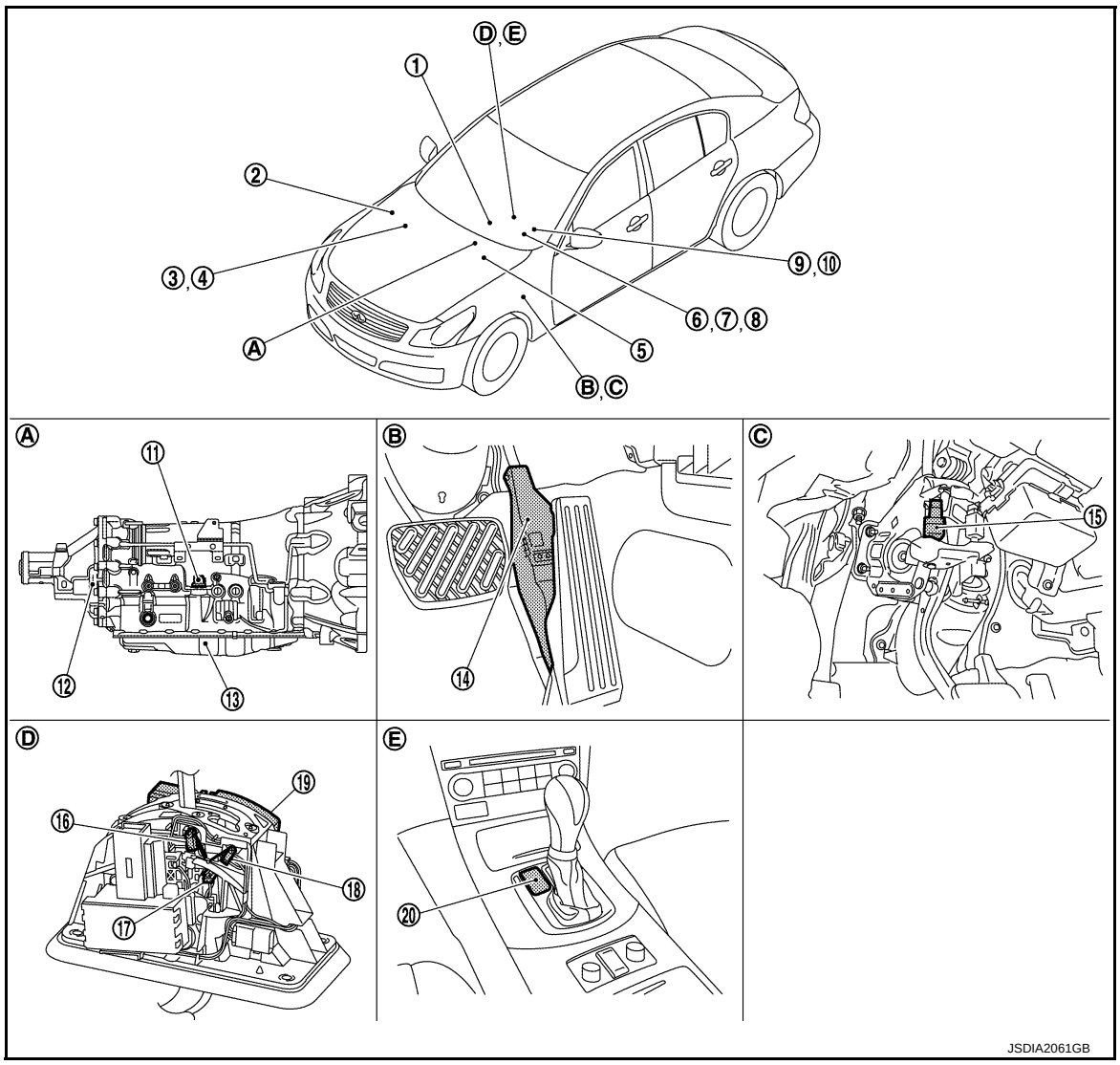

1. Unified meter and A/C amp. Refer to MWI-10, "METER SYSTEM : Component Parts Location".
2. IPDM E/R Refer to PCS-5, "Component Parts Location".
3. ECM Refer to EC-45, "Component Parts Location" (VQ37VHR) or EC-665, "Component Parts Location" (VQ25HR).
4. BCM Refer to BCS-6, "Component Parts Location".
5. ABS actuator and electric unit (control unit) Refer to BRC-11, "Component Parts Location".
6. A/T CHECK indicator lamp (On the combination meter)
7. Shift position indicator (On the combination meter)
8. Manual mode indicator (On the combination meter)
9. Paddle shifter (shift-down)*1
10. Paddle shifter (shift-down)*1
11. A/T assembly connector
12. Output speed sensor*2
13. Control valve & TCM*3
14. Accelerator pedal position signal
15. Stop lamp switch
16. Manual mode position select switch (shift-up)
17. Manual mode select switch
18. Manual mode position select switch (shift-down)
19. Shift position switch
20. Selector lever position indicator
- A. A/T assembly
- B. Accelerator pedal, upper
- C. Brake pedal, upper
- D. A/T shift selector assembly
- E. Center console

*1 : With paddle shifter

*2 : Output speed sensor is installed in A/T assembly.

*3 : Control valve & TCM is installed in A/T assembly.

NOTE:

The following components are included in control valve & TCM (13).

- TCM
- Input speed sensor 1, 2
- A/T fluid temperature sensor
- Transmission range switch
- Direct clutch solenoid valve
- High and low reverse clutch solenoid valve
- Input clutch solenoid valve
- Front brake solenoid valve
- Low brake solenoid valve
- Anti-interlock solenoid valve
- 2346 brake solenoid valve
- Line pressure solenoid valve
- Torque converter clutch solenoid valve

ASC (ADAPTIVE SHIFT CONTROL) : Component Description

INFOID:0000000006207650

Name	Function
TCM	The TCM consists of a microcomputer and connectors for signal input and output and for power supply. The TCM controls the A/T.
Output speed sensor	TM-167, "Description"
Input speed sensor 1	TM-165, "Description"
Input speed sensor 2	
A/T fluid temperature sensor	TM-163, "Description"
Input clutch solenoid valve	TM-191, "Description"
Front brake solenoid valve	TM-194, "Description"
Direct clutch solenoid valve	TM-212, "Description"
High and low reverse clutch solenoid valve	TM-209, "Description"
Low brake solenoid valve	TM-210, "Description"
Anti-interlock solenoid valve	TM-190, "Description"
2346 brake solenoid valve	TM-211, "Description"
Line pressure solenoid valve	TM-189, "Description"
Torque converter clutch solenoid valve	TM-185, "Description"
ECM	EC-664, "System Description" (VQ25HR), EC-45, "System Description" (VQ37VHR)
BCM	BCS-5, "System Description"
ABS actuator and electric unit (control unit)	BRC-18, "System Description"

MANUAL MODE

MANUAL MODE : System Diagram

INFOID:0000000006207651

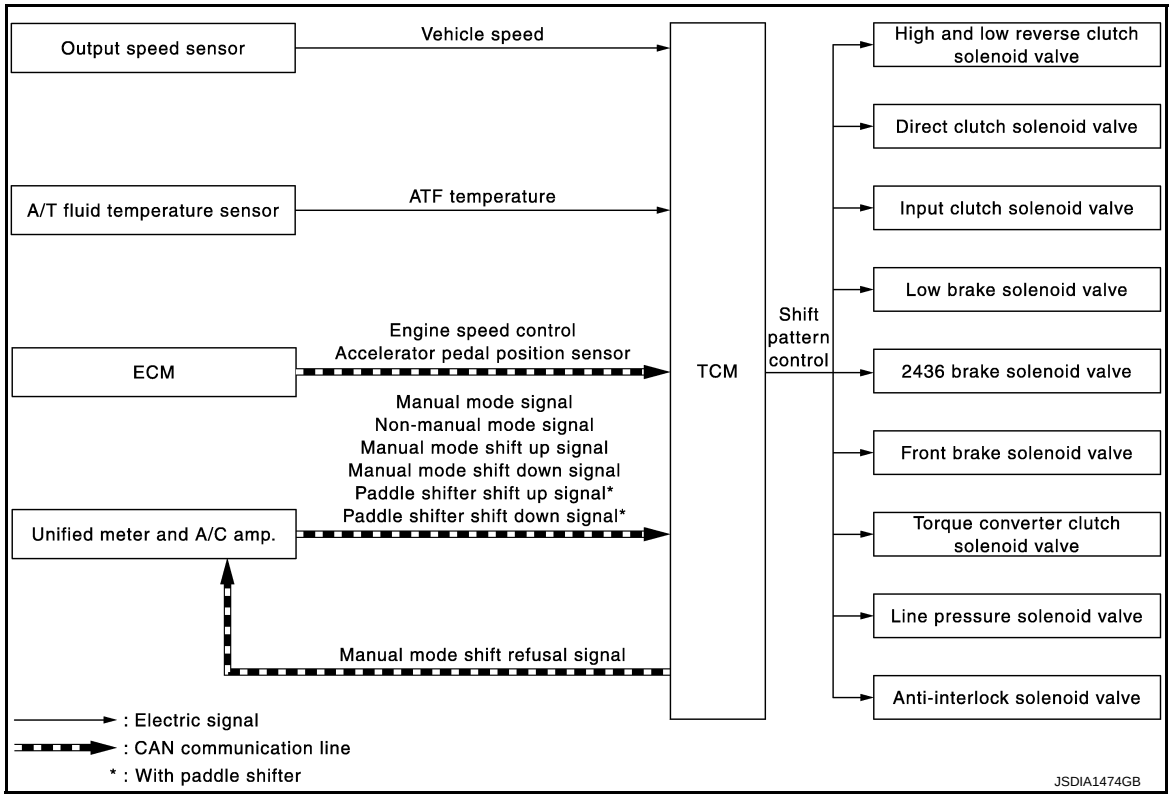

MANUAL MODE : System Description

INFOID:0000000006207652

SYSTEM DESCRIPTION

- The TCM receives the manual mode signal, non-manual mode signal, manual mode shift up signal, manual mode shift down signal, shifter shift up signal* and paddle shifter shift down signal* from unified meter and A/C amp. via CAN communication line. The TCM shifts shift pattern control to the manual mode based on these signals, and then shifts the A/T by operating each solenoid valve according to the shift operation of the driver.
  *: With paddle shifter
- The TCM prohibits the manual mode while being in fail-safe mode due to an A/T malfunction, etc. Refer to TM-246, "Fail-Safe".

Manual Mode Information

The TCM transmits the manual mode shift refusal signal to the unified meter and A/C amp. if the TCM refuses the transmission from the driving status of vehicle when the selector lever shifts to UP or DOWN side. The unified meter and A/C amp. blinks shift indicator on the combination meter and sounds the buzzer to indicate the driver that the shifting is not performed when receiving this signal. However, the TCM does not transmit the manual mode shift refusal signal in the conditions as per the following.

- When the selector lever shifts to DOWN side while driving in 1GR.
- When the selector lever shifts to UP side while driving in 7GR.

MANUAL MODE : Component Parts Location

INFOID:0000000006598767

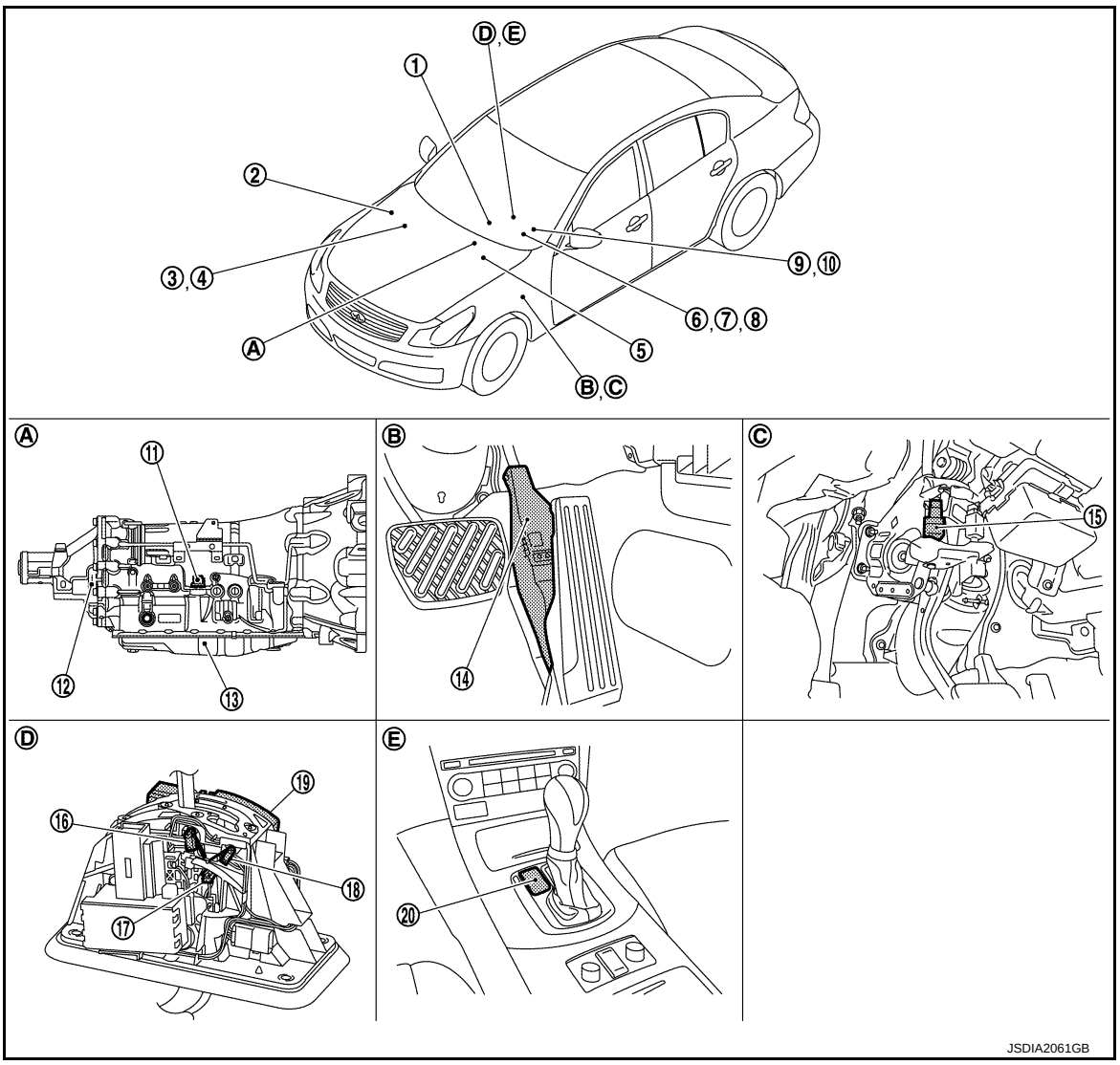

1. Unified meter and A/C amp. Refer to MWI-10, "METER SYSTEM : Component Parts Location".
2. IPDM E/R Refer to PCS-5, "Component Parts Location".
3. ECM Refer to EC-45, "Component Parts Location" (VQ37VHR) or EC-665, "Component Parts Location" (VQ25HR).
4. BCM Refer to BCS-6, "Component Parts Location".
5. ABS actuator and electric unit (control unit) Refer to BRC-11, "Component Parts Location".
6. A/T CHECK indicator lamp (On the combination meter)
7. Shift position indicator (On the combination meter)
8. Manual mode indicator (On the combination meter)
9. Paddle shifter (shift-down)*1
10. Paddle shifter (shift-down)*1
11. A/T assembly connector
12. Output speed sensor*2
13. Control valve & TCM*3
14. Accelerator pedal position signal
15. Stop lamp switch
16. Manual mode position select switch (shift-up)
17. Manual mode select switch
18. Manual mode position select switch (shift-down)
19. Shift position switch
20. Selector lever position indicator

A. A/T assembly
B. Accelerator pedal, upper
C. Brake pedal, upper
D. A/T shift selector assembly
E. Center console

*1 : With paddle shifter

*2 : Output speed sensor is installed in A/T assembly.

*3 : Control valve & TCM is installed in A/T assembly.

NOTE:

The following components are included in control valve & TCM (13).

- TCM
- Input speed sensor 1, 2
- A/T fluid temperature sensor
- Transmission range switch
- Direct clutch solenoid valve
- High and low reverse clutch solenoid valve
- Input clutch solenoid valve
- Front brake solenoid valve
- Low brake solenoid valve
- Anti-interlock solenoid valve
- 2346 brake solenoid valve
- Line pressure solenoid valve
- Torque converter clutch solenoid valve

MANUAL MODE : Component Description

INFOID:0000000006207654

Name	Function
TCM	The TCM consists of a microcomputer and connectors for signal input and output and for power supply. The TCM controls the A/T.
Output speed sensor	TM-167, "Description"
A/T fluid temperature sensor	TM-163, "Description"
Input clutch solenoid valve	TM-191, "Description"
Front brake solenoid valve	TM-194, "Description"
Direct clutch solenoid valve	TM-212, "Description"
High and low reverse clutch solenoid valve	TM-209, "Description"
Low brake solenoid valve	TM-210, "Description"
Anti-interlock solenoid valve	TM-190, "Description"
2346 brake solenoid valve	TM-211, "Description"
Line pressure solenoid valve	TM-189, "Description"
Torque converter clutch solenoid valve	TM-185, "Description"
ECM	EC-664, "System Description" (VQ25HR), EC-45, "System Description" (VQ37VHR)
Unified meter and A/C amp.	MWI-6, "METER SYSTEM : System Description"

LOCK-UP CONTROL

System Diagram

INFOID:0000000006207655

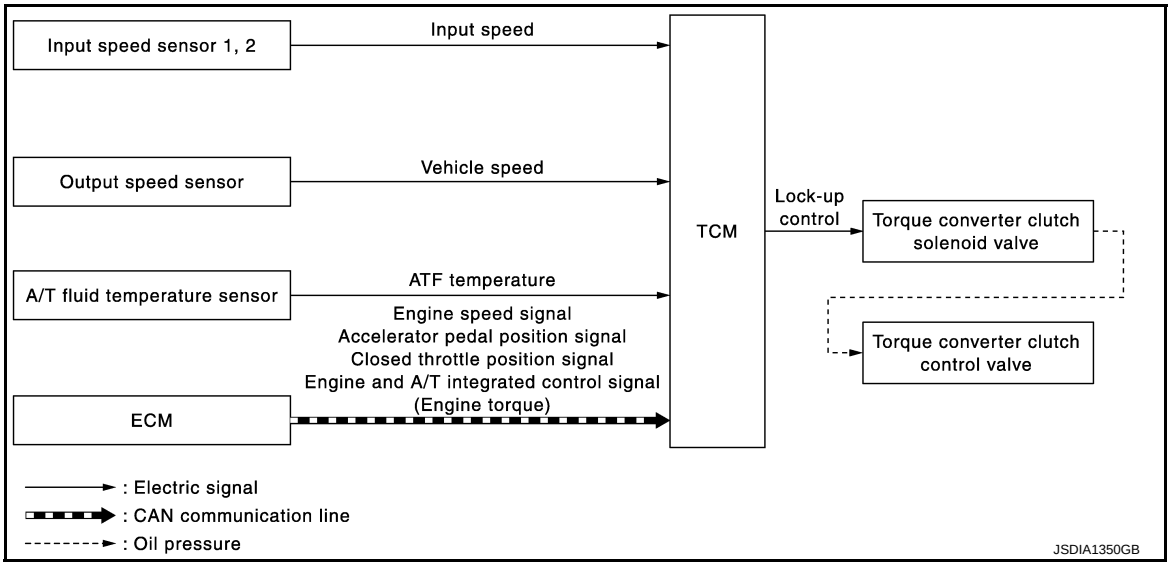

System Description

INFOID:0000000006207656

SYSTEM DESCRIPTION

The torque converter clutch piston in the torque converter is engaged to eliminate torque converter slip to increase power transmission efficiency.

The torque converter clutch control valve operation is controlled by the torque converter clutch solenoid valve, which is controlled by a signal from TCM, and the torque converter clutch control valve engages or releases the torque converter clutch piston.

Lock-up operation condition table

Selector lever	"D" position						"M" position					
Gear position	7	6	5	4	3	2	7	6	5	4	3	2
Lock-up	×	–	–	–	–	–	×	×	×	×	×	×
Slip lock-up	×	×	×	×	×	×	×	×	×	×	×	×

Torque Converter Clutch Control Valve Control

Lock-up control system diagram

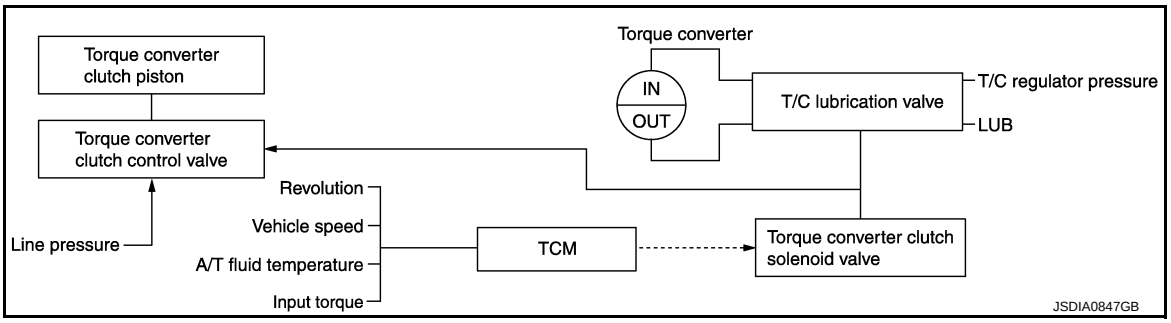

Lock-up released

- In the lock-up released state, the torque converter clutch control valve is set into the unlocked state by the torque converter clutch solenoid and the lock-up apply pressure is drained.
  in this way, the torque converter clutch piston is not coupled.

Lock-up Applied

- In the lock-up applied state, the torque converter clutch control valve is set into the locked state by the torque converter clutch solenoid and lock-up apply pressure is generated.
  In this way, the torque converter clutch piston is pressed and coupled.

Smooth Lock-up Control

When shifting from the lock-up released state to the lock-up applied state, the current output to the torque converter clutch solenoid is controlled with the TCM. In this way, when shifting to the lock-up applied state, the torque converter clutch is temporarily set to the half-clutched state to reduce the shock.

Half-clutched State

- The current output from the TCM to the torque converter clutch solenoid is varied to steadily increase the torque converter clutch solenoid pressure.
  In this way, the lock-up apply pressure gradually rises and while the torque converter clutch piston is put into half-clutched states, the torque converter clutch piston operating pressure is increased and the coupling is completed smoothly.

Slip Lock-up Control

- In the slip region, the torque converter clutch solenoid current is controlled with the TCM to put it into the half-clutched state. This absorbs the engine torque fluctuation and lock-up operates from low speed.
  This raises the fuel efficiency for 2GR, 3GR, 4GR 5GR, 6GR and 7GR.

Component Parts Location

INFOID:0000000006598768

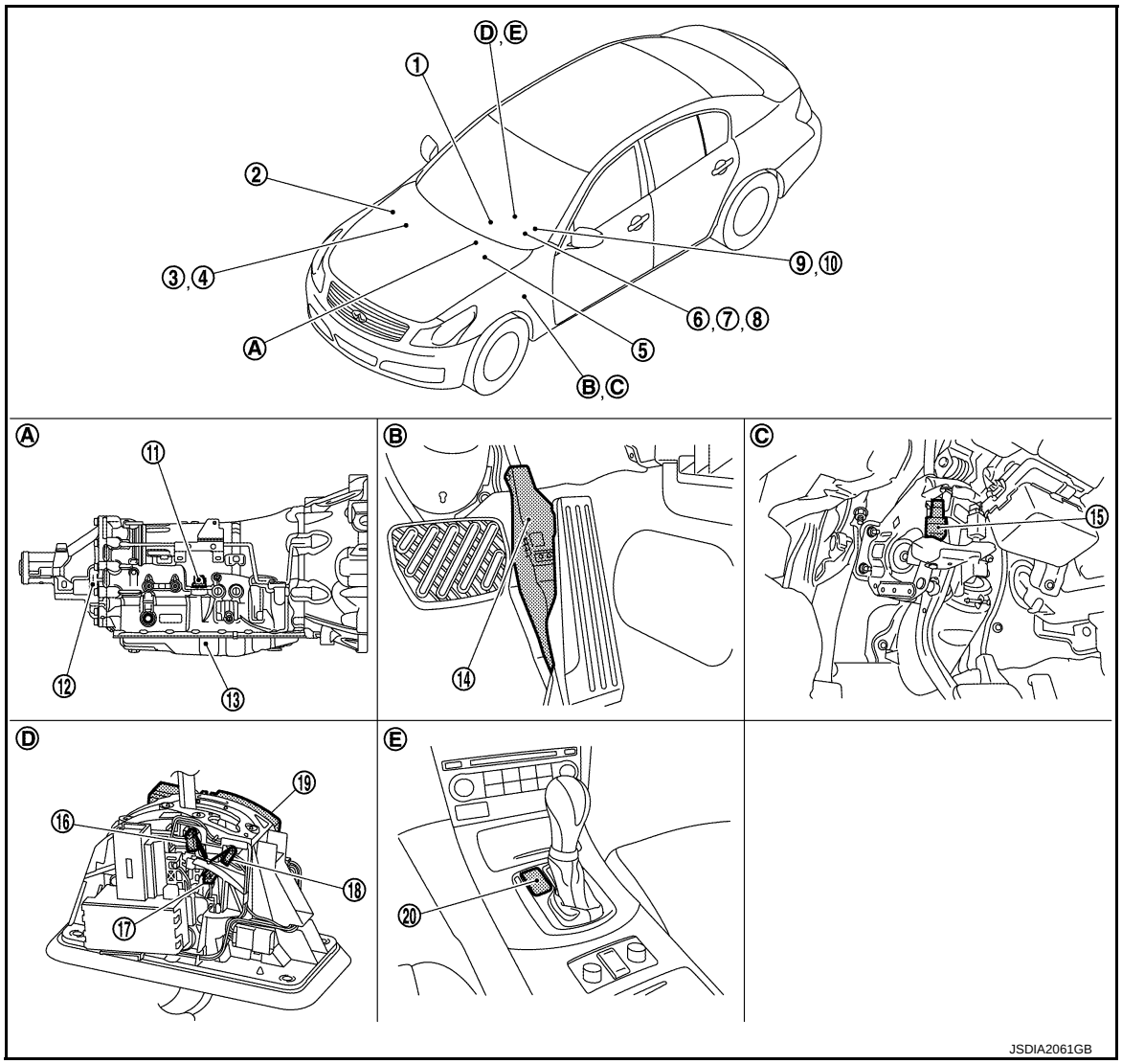

1. Unified meter and A/C amp. Refer to MWI-10, "METER SYSTEM : Component Parts Location".
2. IPDM E/R Refer to PCS-5, "Component Parts Location".
3. ECM Refer to EC-45, "Component Parts Location" (VQ37VHR) or EC-665, "Component Parts Location" (VQ25HR).
4. BCM Refer to BCS-6, "Component Parts Location".
5. ABS actuator and electric unit (control unit) Refer to BRC-11, "Component Parts Location".
6. A/T CHECK indicator lamp (On the combination meter)
7. Shift position indicator (On the combination meter)
8. Manual mode indicator (On the combination meter)
9. Paddle shifter (shift-down)*1
10. Paddle shifter (shift-down)*1
11. A/T assembly connector
12. Output speed sensor*2
13. Control valve & TCM*3
14. Accelerator pedal position signal
15. Stop lamp switch
16. Manual mode position select switch (shift-up)
17. Manual mode select switch
18. Manual mode position select switch (shift-down)
19. Shift position switch
20. Selector lever position indicator

A. A/T assembly
B. Accelerator pedal, upper
C. Brake pedal, upper
D. A/T shift selector assembly
E. Center console

*1 : With paddle shifter
*2 : Output speed sensor is installed in A/T assembly.
*3 : Control valve & TCM is installed in A/T assembly.

NOTE:
The following components are included in control valve & TCM (13).
- TCM
- Input speed sensor 1, 2
- A/T fluid temperature sensor
- Transmission range switch
- Direct clutch solenoid valve
- High and low reverse clutch solenoid valve
- Input clutch solenoid valve
- Front brake solenoid valve
- Low brake solenoid valve
- Anti-interlock solenoid valve
- 2346 brake solenoid valve
- Line pressure solenoid valve
- Torque converter clutch solenoid valve

Component Description

INFOID:0000000006207658

Name	Function
TCM	The TCM consists of a microcomputer and connectors for signal input and output and for power supply. The TCM controls the A/T.
Output speed sensor	TM-167, "Description"
Input speed sensor 1	TM-165, "Description"
Input speed sensor 2	
A/T fluid temperature sensor	TM-163, "Description"
Torque converter clutch solenoid valve	TM-185, "Description"
Torque converter clutch control valve	Switches the lock-up to operating or released. Also, by performing the lock-up operation transiently, lock-up smoothly.
ECM	EC-664, "System Description" (VQ25HR), EC-45, "System Description" (VQ37VHR)

SHIFT MECHANISM

Cross-Sectional View

INFOID:0000000006207659

2WD MODELS

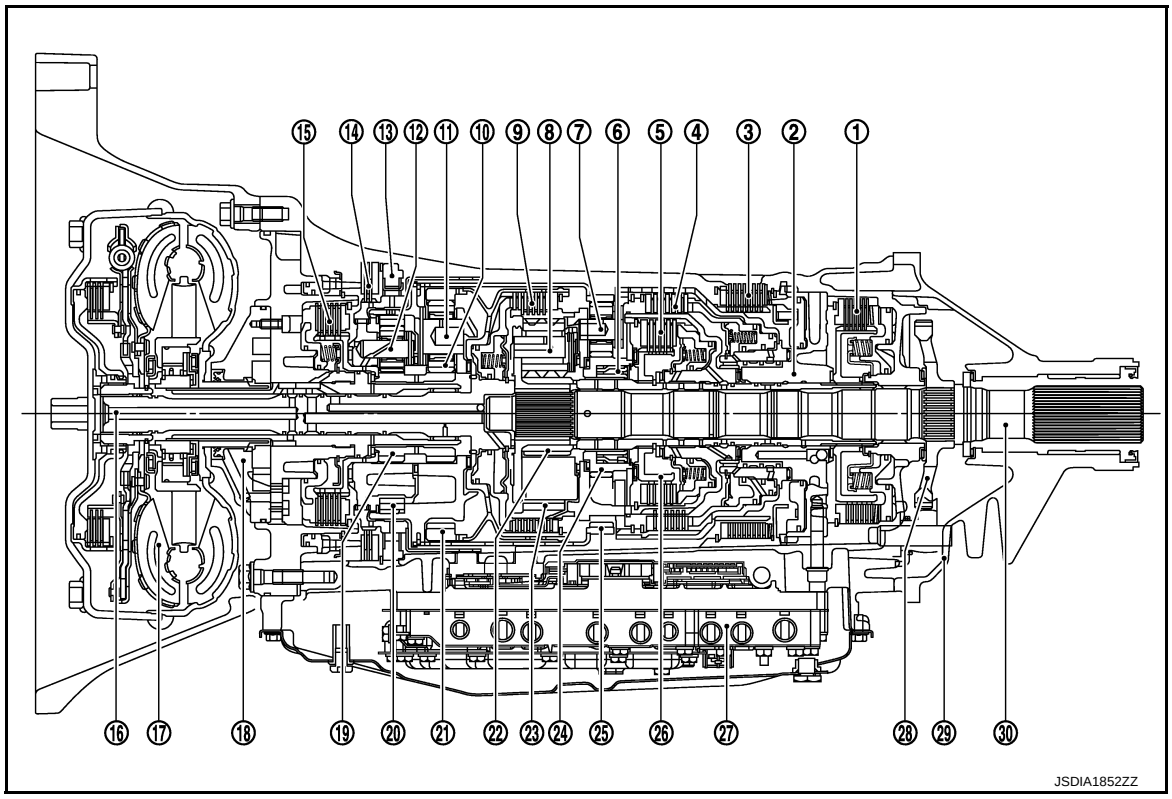

1.	Low brake	2.	Drum support	3.	Reverse brake
4.	Direct clutch	5.	High and low reverse clutch	6.	2nd one-way clutch
7.*1	Rear carrier	8.	Mid carrier	9.	Input clutch
10.*2	Front sun gear	11.*3	Front carrier	12.	Under drive carrier
13.	1st one-way clutch	14.	Front brake	15.	2346 brake
16.*4	Input shaft	17.	Torque converter	18.	Oil pump
19.*2	Under drive sun gear	20.*3	Under drive internal gear	21.*4	Front internal gear
22.	Mid sun gear	23.*1	Mid internal gear	24.	Rear sun gear
25.	Rear internal gear	26.	High and low reverse clutch hub	27.	Control valve & TCM
28.	Parking gear	29.	Rear extension	30.	Output shaft

*1: 7 and 23 are one unit.

*2: 10 and 19 are one unit.

*3: 11 and 20 are one unit.

*4: 16 and 21 are one unit.

AWD MODELS

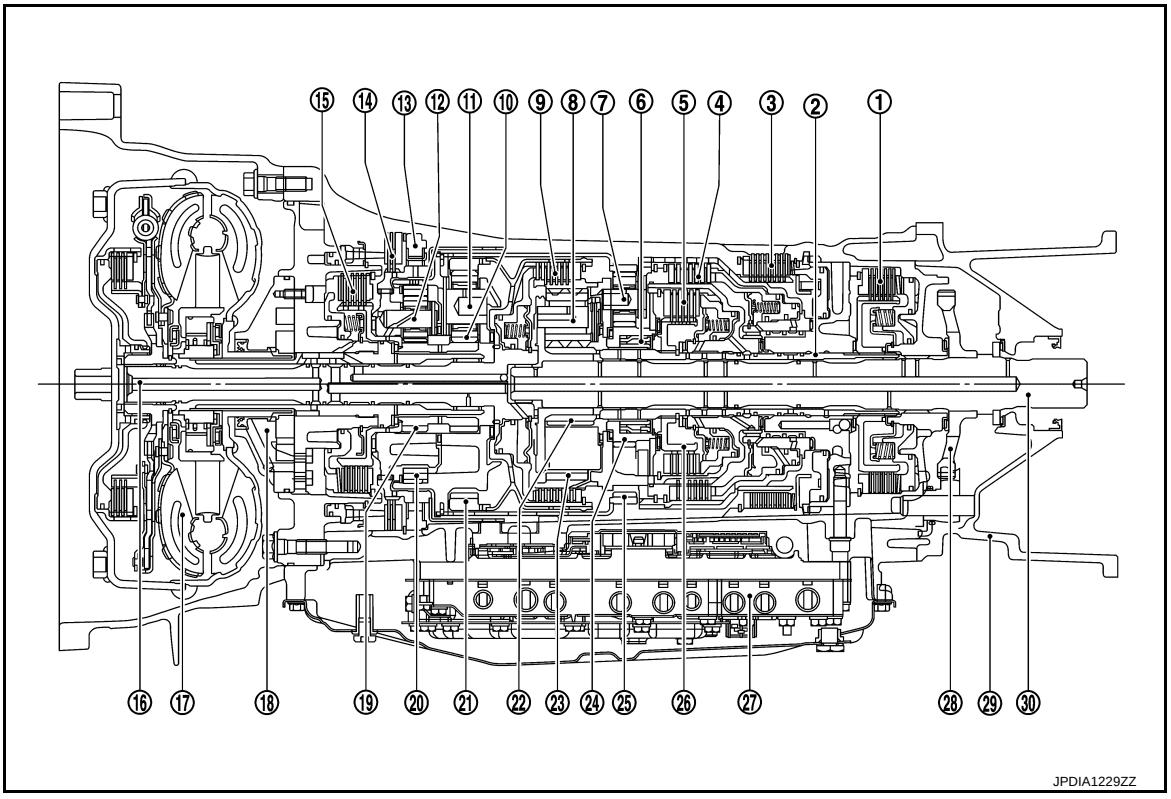

1. Low brake
2. Drum support
3. Reverse brake
4. Direct clutch
5. High and low reverse clutch
6. 2nd one-way clutch
7. *1 Rear carrier
8. Mid carrier
9. Input clutch
10. *2 Front sun gear
11. *3 Front carrier
12. Under drive carrier
13. 1st one-way clutch
14. Front brake
15. 2346 brake
16. *4 Input shaft
17. Torque converter
18. Oil pump
19. *2 Under drive sun gear
20. *3 Under drive internal gear
21. *4 Front internal gear
22. Mid sun gear
23. *1 Mid internal gear
24. Rear sun gear
25. Rear internal gear
26. High and low reverse clutch hub
27. Control valve & TCM
28. Parking gear
29. Adapter case
30. Output shaft

*1: 7 and 23 are one unit.
*2: 10 and 19 are one unit.
*3: 11 and 20 are one unit.
*4: 16 and 21 are one unit.

System Diagram

INFOID:0000000006207660

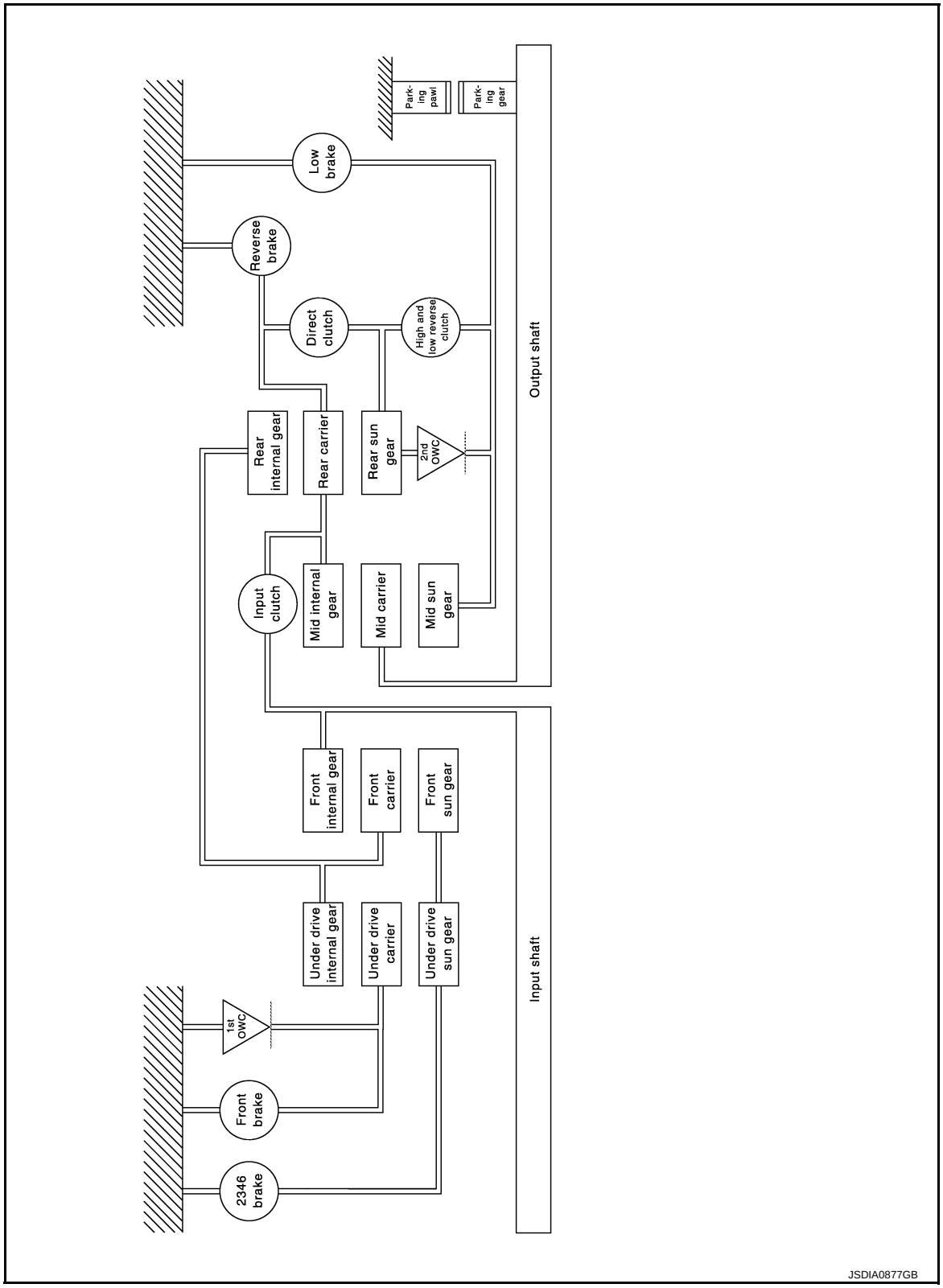

System Description

INFOID:0000000006207661

DESCRIPTION

With the use of 4 sets of planetary gears, A/T enables 7-speed transmission for forward and 1-speed transmission for backward, depending on the combination of 3 sets of multiple-disc clutches, 4 sets of multiple-disc brakes and 2 sets of one-way clutches.

CLUTCH AND BRAKE CHART

Name of the part / Shift position		I/C	D/C		H&LR/C	F/B	L/B		2346/B	REV/B	1st OWC	2nd OWC	Remarks
			FRONT	REAR			INNER	OUTER					
P					△	△							Park position
R					◇	◇				○	◎	◎	Reverse position
N					△	△							Neutral position
D, DS	1st				☆	☆	○	○			◎	◎	Automatic shift 1⇔2⇔3⇔4⇔5⇔6⇔7
	2nd						○	○	○			◎	
	3rd		○	○			○		○				
	4th		○	○	○				○				
	5th	○		○	○								
	6th	○			○				○				
	7th	○			○	○							
7M	7th	○			○	○							Locks* (held stationary) in 7GR
6M	6th	○			○				○				Locks* (held stationary) in 6GR
5M	5th	○		○	○								Locks* (held stationary) in 5GR
4M	4th		○	○	○				○				Locks* (held stationary) in 4GR
3M	3rd		○	○			○		○				Locks* (held stationary) in 3GR
2M	2nd				◇		○	○	○			◎	Locks* (held stationary) in 2GR
1M	1st				◇	◇	○	○			◎	◎	Locks (held stationary) in 1GR

*: Down shift automatically according to the vehicle speed.

○ – Operates
◎ – Operates during “progressive” acceleration.
◇ – Operates and affects power transmission while coasting.
△ – Line pressure is applied but does not affect power transmission.
☆ – Operates at the fixed speed or less.

JSDIA1458GB

POWER TRANSMISSION

“N” Position

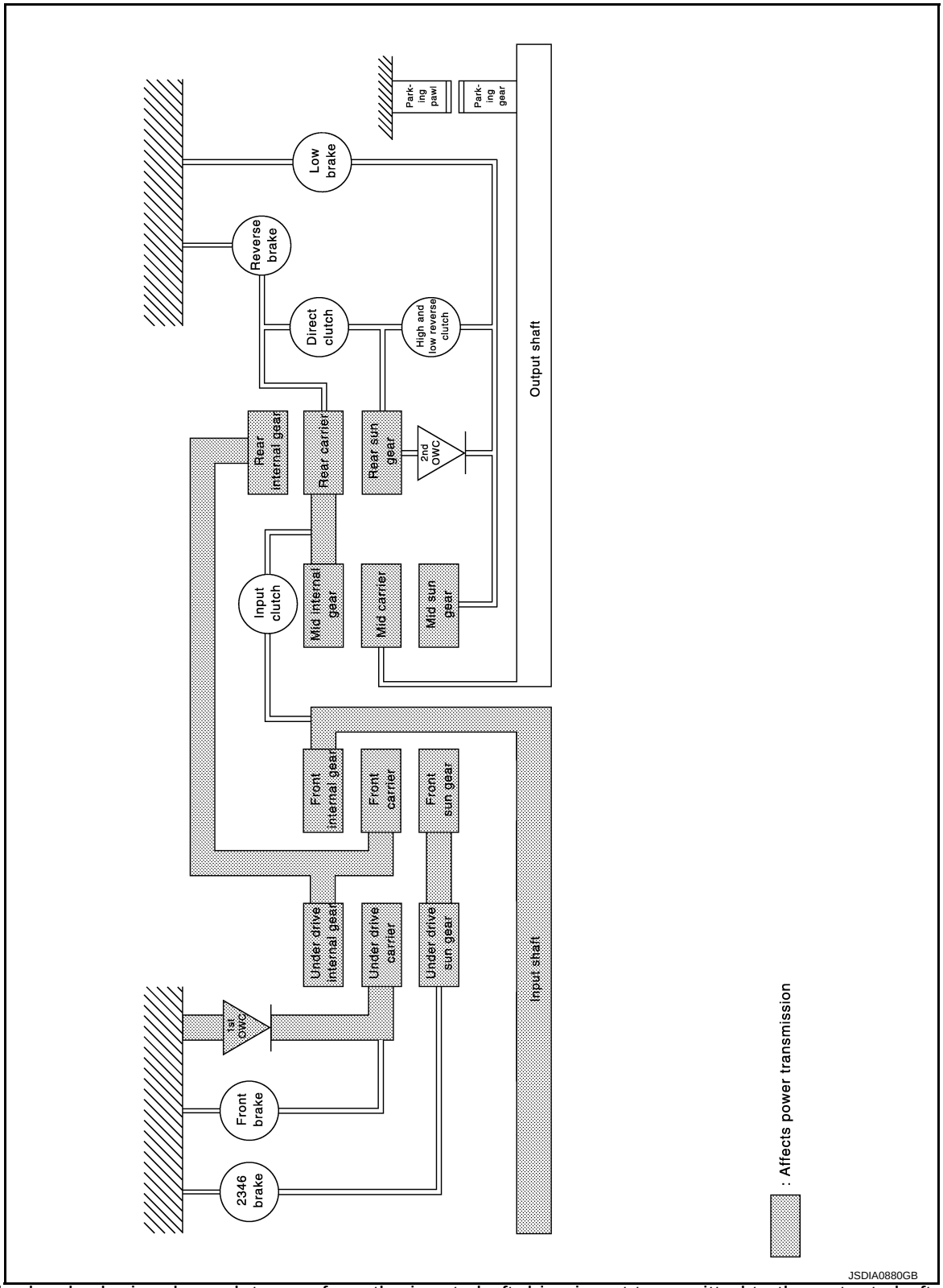

Since the low brake is released, torque from the input shaft drive is not transmitted to the output shaft.

“P” Position

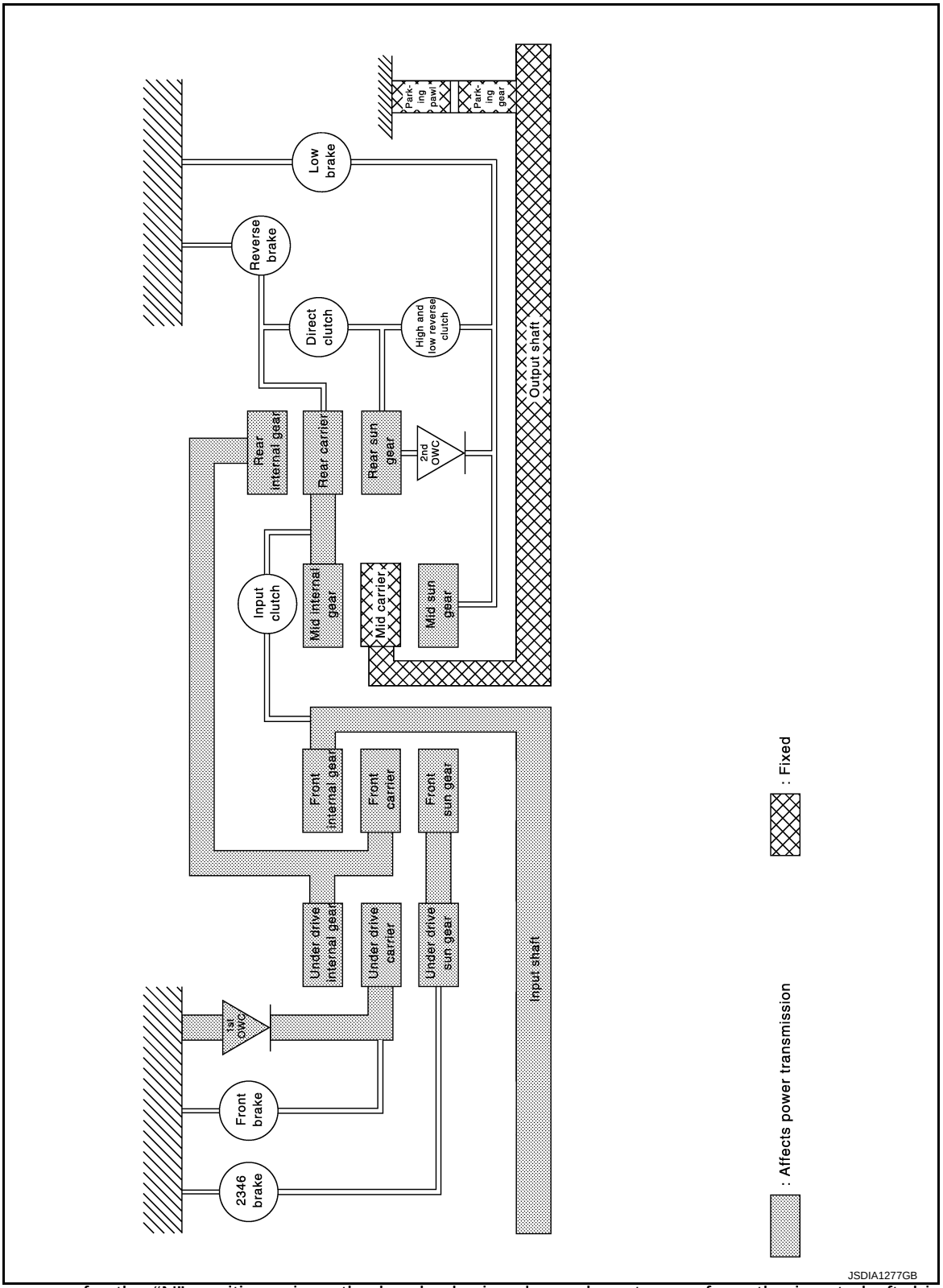

- The same as for the “N” position, since the low brake is released, so torque from the input shaft drive is not transmitted to the output shaft.
- The parking pawl linked with the selector lever meshes with the parking gear and fastens the output shaft mechanically.

“D1” and “DS1” Positions

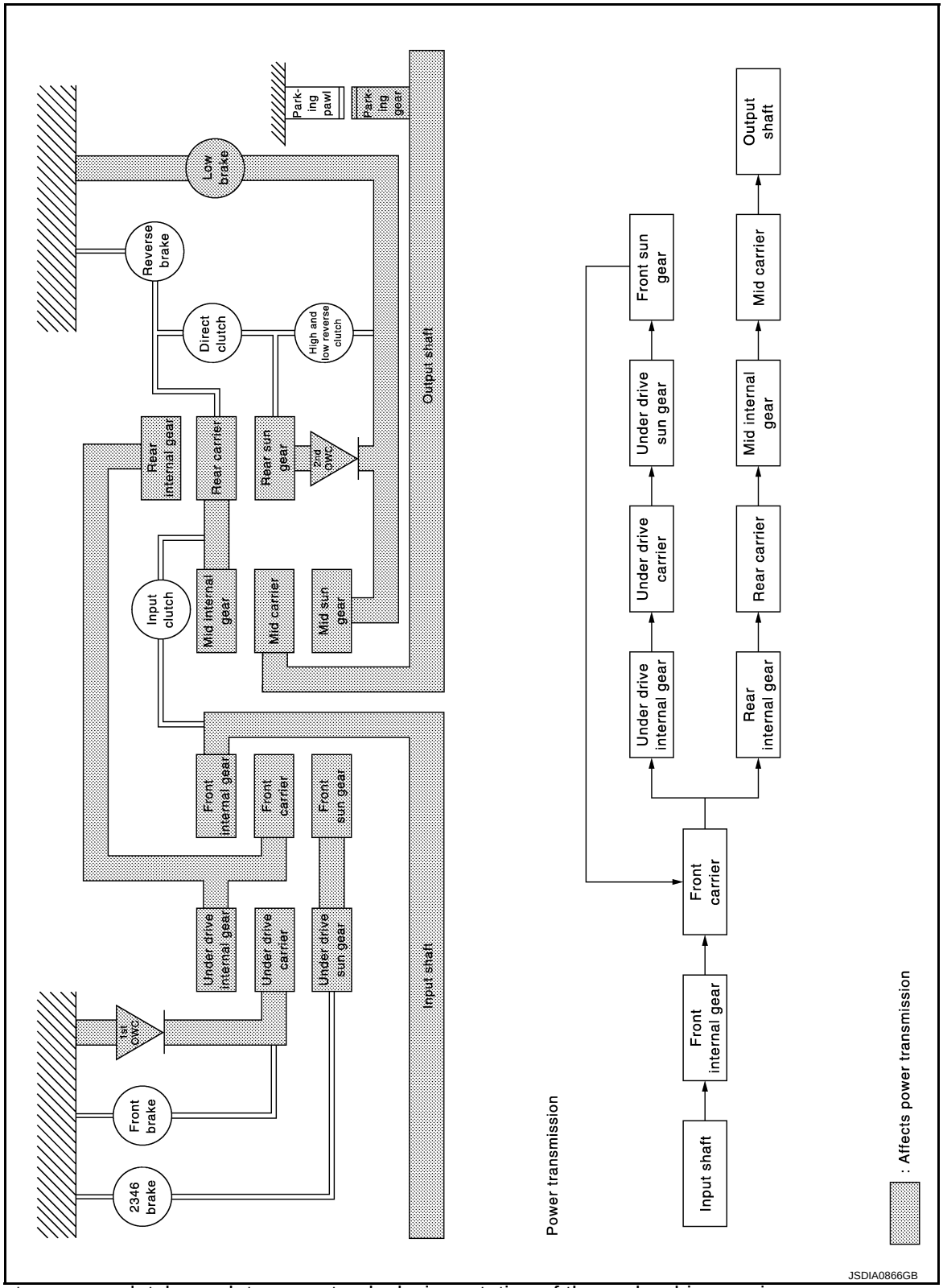

- The 1st one-way clutch regulates counterclockwise rotation of the under drive carrier.
- The 2nd one-way clutch regulates counterclockwise rotation of the rear sun gear.
- The mid sun gear is fixed by the low brake.
- Each planetary gear enters the state described below.

Front planetary gear

Name	Front sun gear	Front carrier	Front internal gear
Condition	—	Output	Input
Direction of rotation	Counterclockwise revolution	Clockwise revolution	Clockwise revolution
Number of revolutions	Deceleration from front internal gear	Deceleration from front internal gear	Same number of revolution as the input shaft

Under drive planetary gear

Name	Under drive sun gear	Under drive carrier	Under drive internal gear
Condition	—	Fixed	Input/Output
Direction of rotation	Counterclockwise revolution	—	Clockwise revolution
Number of revolutions	Acceleration from under drive internal gear	—	Same number of revolution as the front carrier

Rear planetary gear

Name	Rear sun gear	Rear carrier	Rear internal gear
Condition	Fixed	Output	Input
Direction of rotation	—	Clockwise revolution	Clockwise revolution
Number of revolutions	—	Deceleration from rear internal gear	Same number of revolution as the under drive internal gear

Mid planetary gear

Name	Mid sun gear	Mid carrier	Mid internal gear
Condition	Fixed	Output	Input
Direction of rotation	—	Clockwise revolution	Clockwise revolution
Number of revolutions	—	Deceleration from mid internal gear	Same number of revolution as the rear carrier

“M1” Position

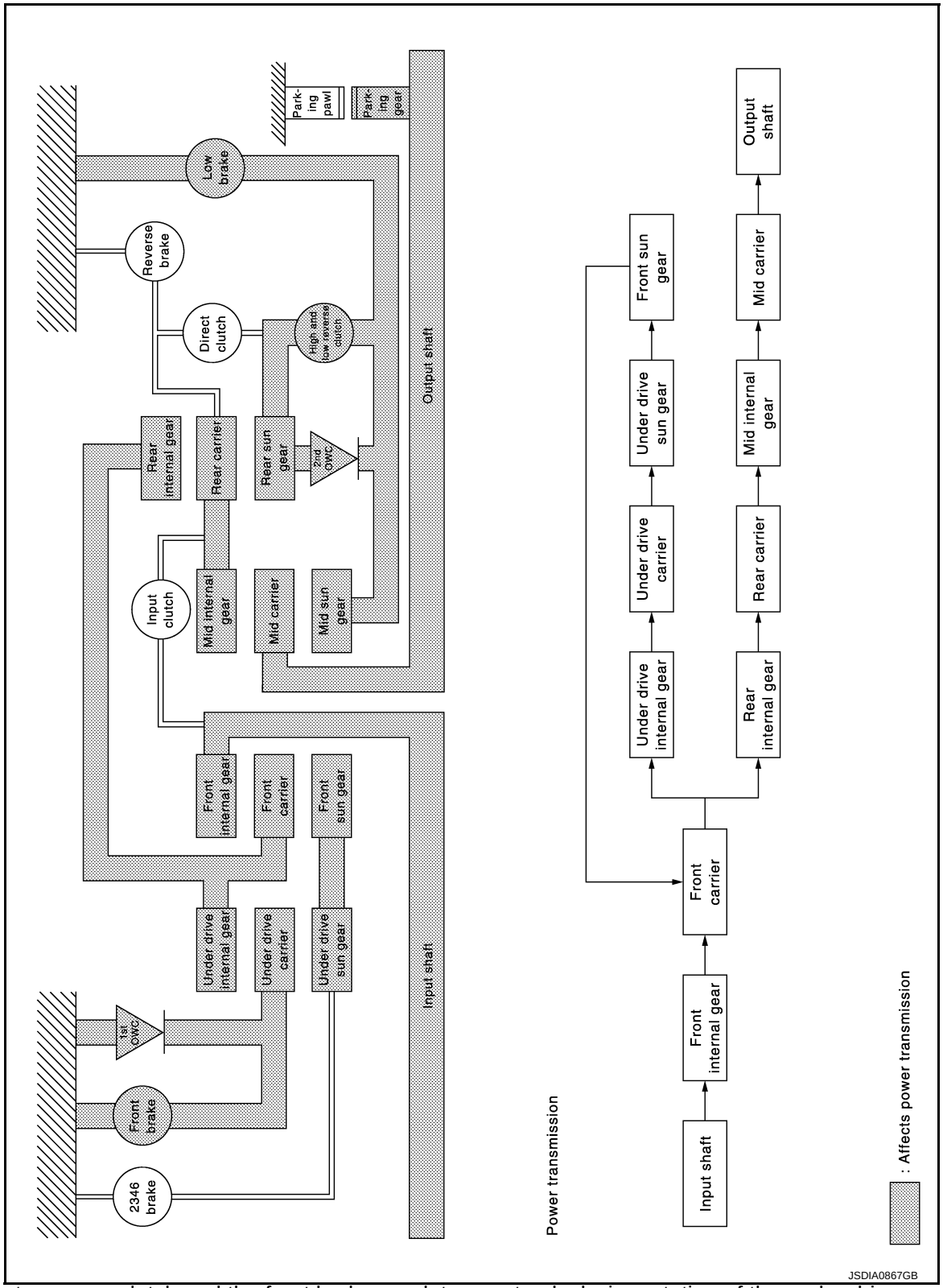

- The 1st one-way clutch and the front brake regulate counterclockwise rotation of the under drive carrier.
  NOTE:
  The front brake operates only while coasting.
- The 2nd one-way clutch and the high and low reverse clutch regulate counterclockwise rotation of the rear sun gear.
  NOTE:
  The high and low reverse clutch operates only while coasting.
- The mid sun gear is fixed by the low brake.

• Each planetary gear enters the state described below.

Front planetary gear

Name	Front sun gear	Front carrier	Front internal gear
Condition	—	Output	Input
Direction of rotation	Counterclockwise revolution	Clockwise revolution	Clockwise revolution
Number of revolutions	Deceleration from front internal gear	Deceleration from front internal gear	Same number of revolution as the input shaft

Under drive planetary gear

Name	Under drive sun gear	Under drive carrier	Under drive internal gear
Condition	—	Fixed	Input/Output
Direction of rotation	Counterclockwise revolution	—	Clockwise revolution
Number of revolutions	Acceleration from under drive internal gear	—	Same number of revolution as the front carrier

Rear planetary gear

Name	Rear sun gear	Rear carrier	Rear internal gear
Condition	Fixed	Output	Input
Direction of rotation	—	Clockwise revolution	Clockwise revolution
Number of revolutions	—	Deceleration from rear internal gear	Same number of revolution as the under drive internal gear

Mid planetary gear

Name	Mid sun gear	Mid carrier	Mid internal gear
Condition	Fixed	Output	Input
Direction of rotation	—	Clockwise revolution	Clockwise revolution
Number of revolutions	—	Deceleration from mid internal gear	Same number of revolution as the rear carrier

“D2” and “DS2” Positions

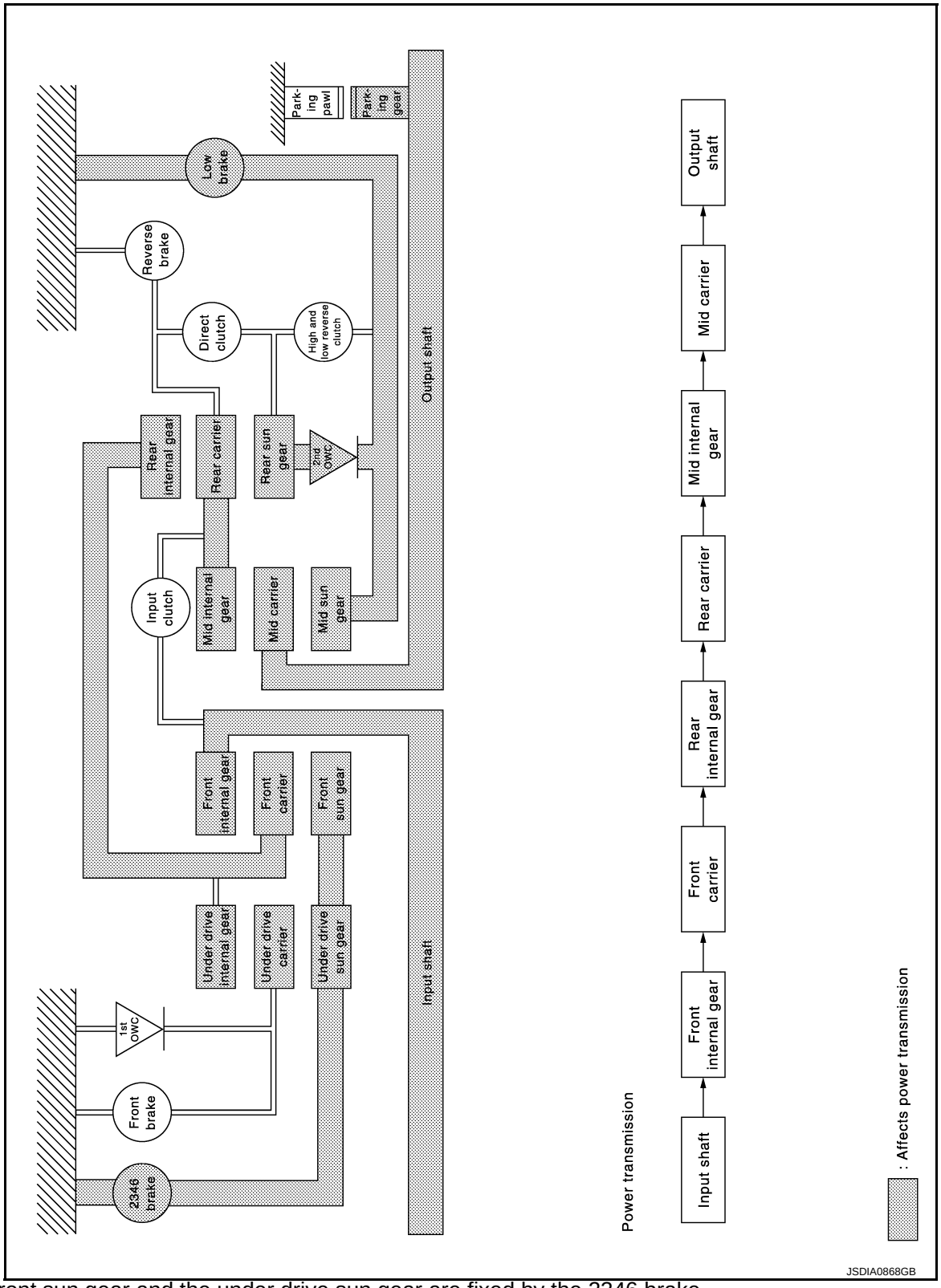

- The front sun gear and the under drive sun gear are fixed by the 2346 brake.
- The 2nd one-way clutch regulates counterclockwise rotation of the rear sun gear.
- The mid sun gear is fixed by the low brake.
- Each planetary gear enters the state described below.

Front planetary gear

Name	Front sun gear	Front carrier	Front internal gear
Condition	Fixed	Output	Input
Direction of rotation	—	Clockwise revolution	Clockwise revolution
Number of revolutions	—	Deceleration from front internal gear	Same number of revolution as the input shaft

Under drive planetary gear

Name	Under drive sun gear	Under drive carrier	Under drive internal gear
Condition	Fixed	—	Input/Output
Direction of rotation	—	Clockwise revolution	Clockwise revolution
Number of revolutions	—	Deceleration from under drive internal gear	Same number of revolution as the front carrier

Rear planetary gear

Name	Rear sun gear	Rear carrier	Rear internal gear
Condition	Fixed	Output	Input
Direction of rotation	—	Clockwise revolution	Clockwise revolution
Number of revolutions	—	Deceleration from rear internal gear	Same number of revolution as the under drive internal gear

Mid planetary gear

Name	Mid sun gear	Mid carrier	Mid internal gear
Condition	Fixed	Output	Input
Direction of rotation	—	Clockwise revolution	Clockwise revolution
Number of revolutions	—	Deceleration from mid internal gear	Same number of revolution as the rear carrier

“M2” Position

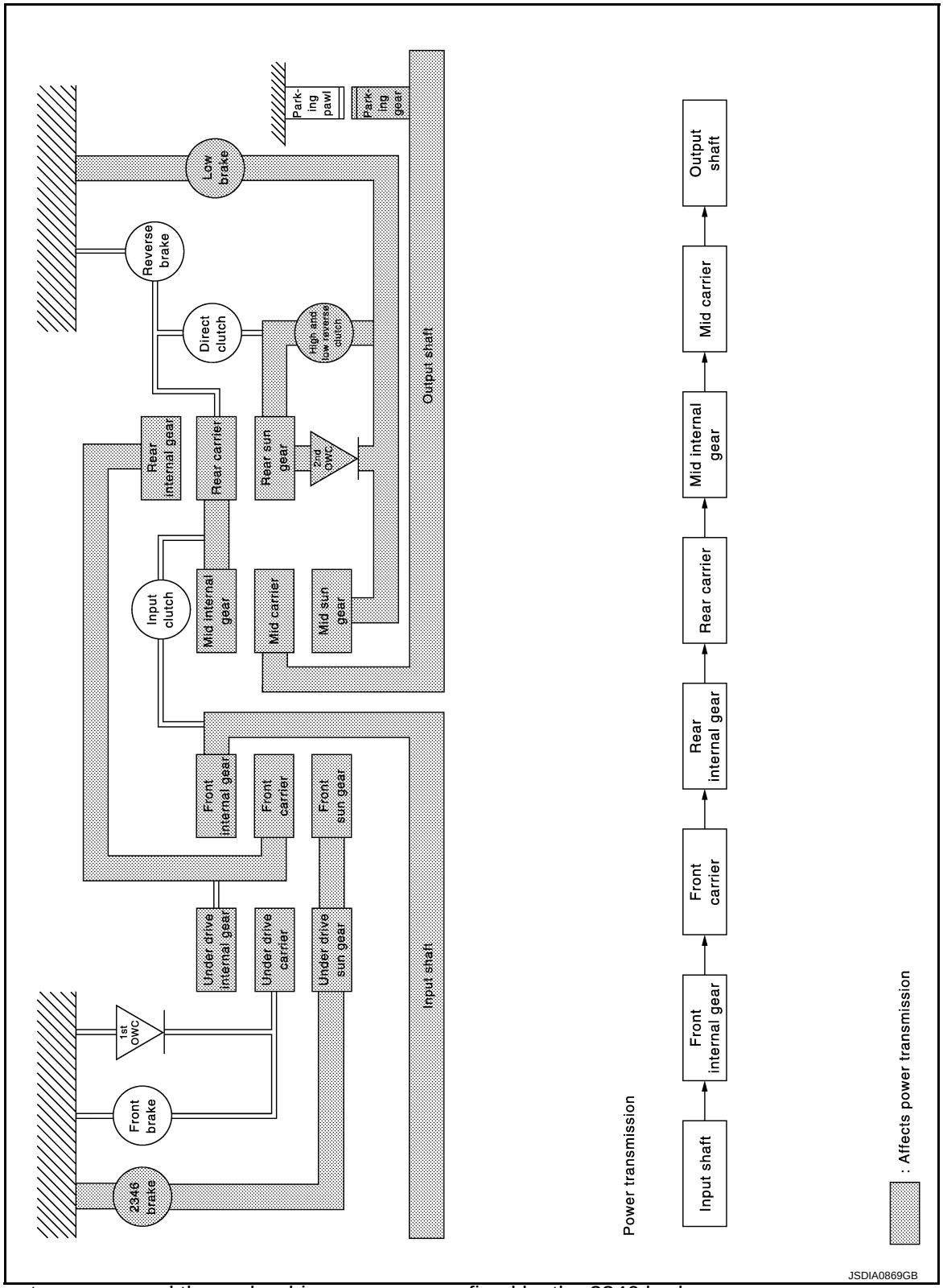

- The front sun gear and the under drive sun gear are fixed by the 2346 brake.
- The 2nd one-way clutch and the high and low reverse clutch regulate counterclockwise rotation of the rear sun gear.

  NOTE:

  The high and low reverse clutch operates only while coasting.
- The mid sun gear is fixed by the low brake.
- Each planetary gear enters the state described below.

Front planetary gear

Name	Front sun gear	Front carrier	Front internal gear
Condition	Fixed	Output	Input
Direction of rotation	—	Clockwise revolution	Clockwise revolution
Number of revolutions	—	Deceleration from front internal gear	Same number of revolution as the input shaft

Under drive planetary gear

Name	Under drive sun gear	Under drive carrier	Under drive internal gear
Condition	Fixed	—	Input/Output
Direction of rotation	—	Clockwise revolution	Clockwise revolution
Number of revolutions	—	Deceleration from under drive internal gear	Same number of revolution as the front carrier

Rear planetary gear

Name	Rear sun gear	Rear carrier	Rear internal gear
Condition	Fixed	Output	Input
Direction of rotation	—	Clockwise revolution	Clockwise revolution
Number of revolutions	—	Deceleration from rear internal gear	Same number of revolution as the under drive internal gear

Mid planetary gear

Name	Mid sun gear	Mid carrier	Mid internal gear
Condition	Fixed	Output	Input
Direction of rotation	—	Clockwise revolution	Clockwise revolution
Number of revolutions	—	Deceleration from mid internal gear	Same number of revolution as the rear carrier

“D3”, “DS3” and “M3” Positions

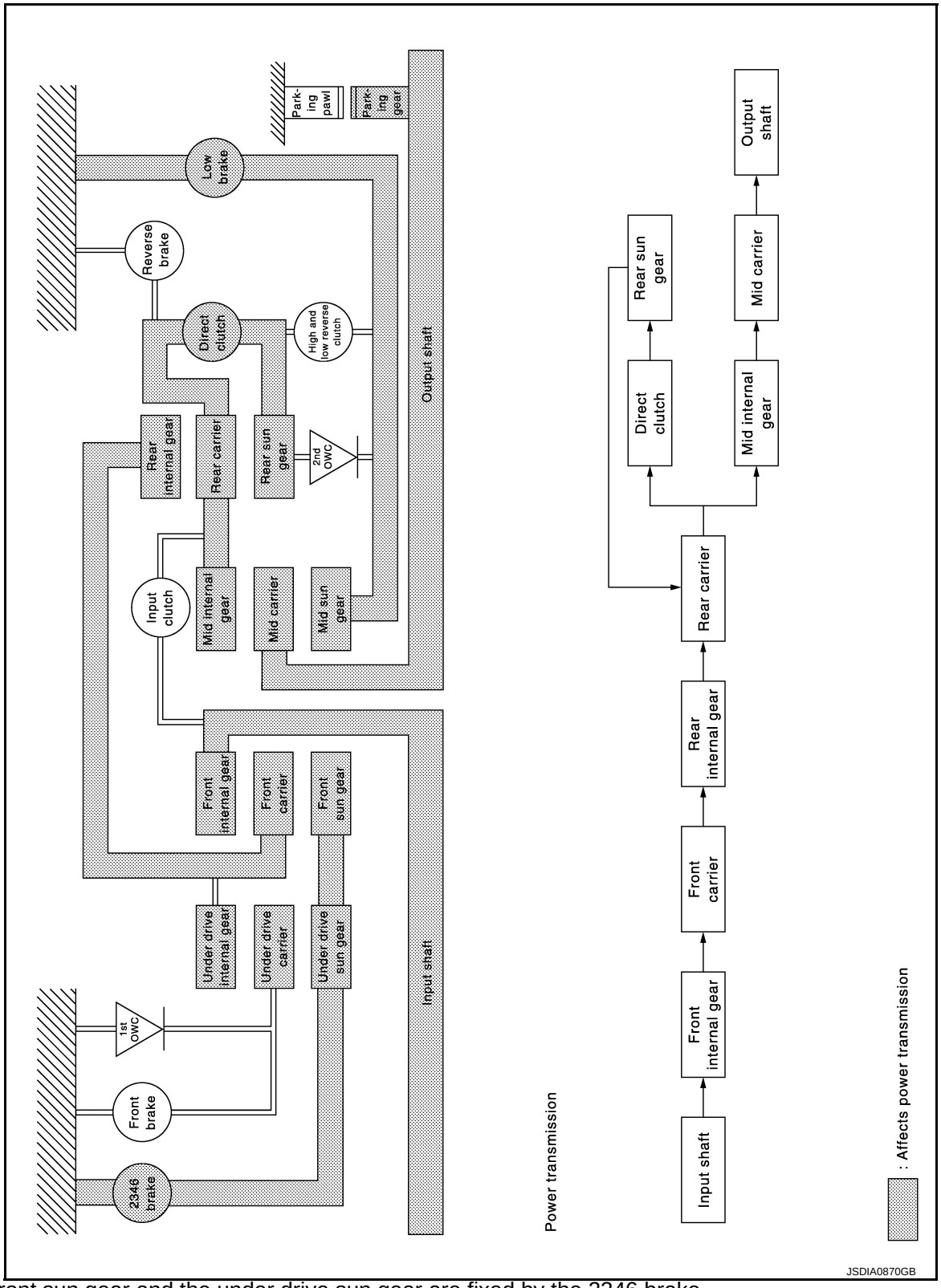

- The front sun gear and the under drive sun gear are fixed by the 2346 brake.
- The direct clutch gets engaged and connects the rear sun gear with the rear carrier.
- The mid sun gear is fixed by the low brake.
- Each planetary gear enters the state described below.

Front planetary gear

Name	Front sun gear	Front carrier	Front internal gear
Condition	Fixed	Output	Input
Direction of rotation	—	Clockwise revolution	Clockwise revolution
Number of revolutions	—	Deceleration from front internal gear	Same number of revolution as the input shaft

Under drive planetary gear

Name	Under drive sun gear	Under drive carrier	Under drive internal gear
Condition	Fixed	—	Input/Output
Direction of rotation	—	Clockwise revolution	Clockwise revolution
Number of revolutions	—	Deceleration from under drive internal gear	Same number of revolution as the front carrier

Rear planetary gear

Name	Rear sun gear	Rear carrier	Rear internal gear
Condition	—	Output	Input
Direction of rotation	Clockwise revolution	Clockwise revolution	Clockwise revolution
Number of revolutions	Same number of revolution as the rear internal gear	Same number of revolution as the rear internal gear	Same number of revolution as the under drive internal gear

Mid planetary gear

Name	Mid sun gear	Mid carrier	Mid internal gear
Condition	Fixed	Output	Input
Direction of rotation	—	Clockwise revolution	Clockwise revolution
Number of revolutions	—	Deceleration from mid internal gear	Same number of revolution as the rear carrier

“D4”, “DS4” and “M4” Positions

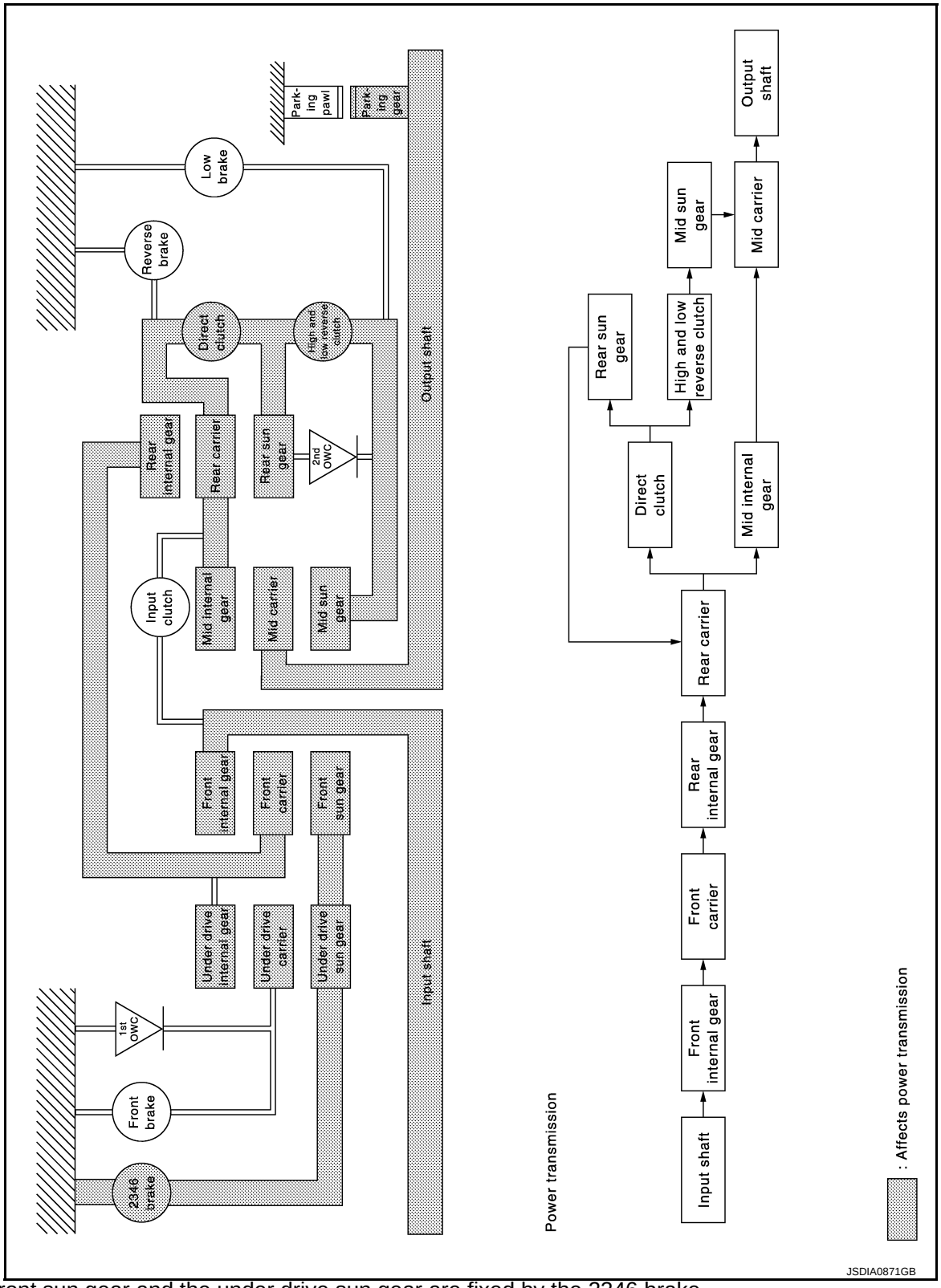

- The front sun gear and the under drive sun gear are fixed by the 2346 brake.
- The direct clutch gets engaged and connects the rear sun gear with the rear carrier.
- The high and low reverse clutch gets engaged and connects the rear sun gear with the mid sun gear.
- Each planetary gear enters the state described below.

Front planetary gear

Name	Front sun gear	Front carrier	Front internal gear
Condition	Fixed	Output	Input
Direction of rotation	—	Clockwise revolution	Clockwise revolution
Number of revolutions	—	Deceleration from front internal gear	Same number of revolution as the input shaft

Under drive planetary gear

Name	Under drive sun gear	Under drive carrier	Under drive internal gear
Condition	Fixed	—	Input/Output
Direction of rotation	—	Clockwise revolution	Clockwise revolution
Number of revolutions	—	Deceleration from under drive internal gear	Same number of revolution as the front carrier

Rear planetary gear

Name	Rear sun gear	Rear carrier	Rear internal gear
Condition	—	Output	Input
Direction of rotation	Clockwise revolution	Clockwise revolution	Clockwise revolution
Number of revolutions	Same number of revolution as the rear internal gear	Same number of revolution as the rear internal gear	Same number of revolution as the under drive internal gear

Mid planetary gear

Name	Mid sun gear	Mid carrier	Mid internal gear
Condition	—	Output	Input
Direction of rotation	Clockwise revolution	Clockwise revolution	Clockwise revolution
Number of revolutions	Same number of revolution as the mid internal gear	Same number of revolution as the mid internal gear	Same number of revolution as the rear carrier

“D5”, “DS5” and “M5” Positions

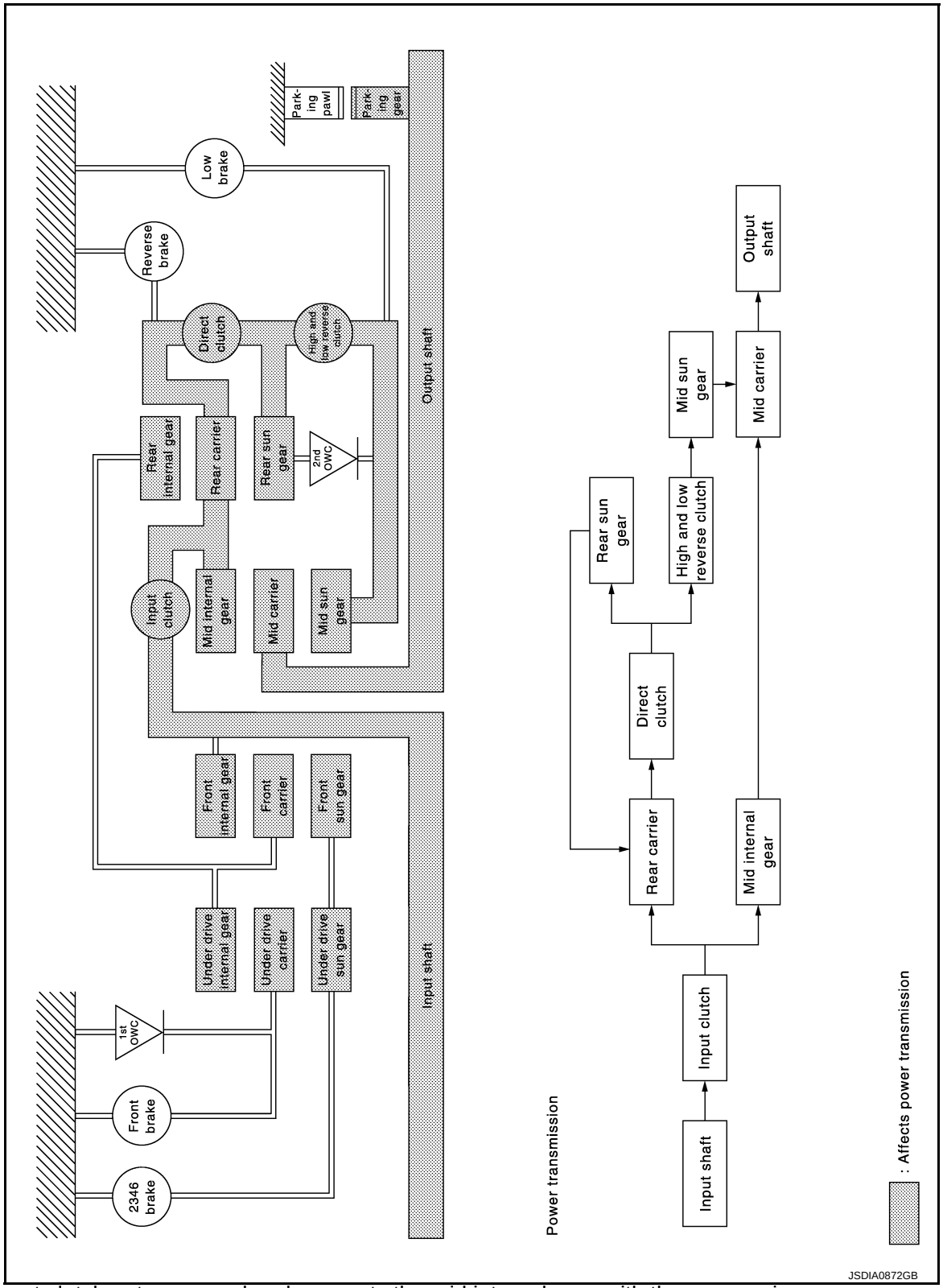

- The input clutch gets engaged and connects the mid internal gear with the rear carrier.
- The direct clutch gets engaged and connects the rear sun gear with the rear carrier.
- The high and low reverse clutch gets engaged and connects the rear sun gear with the mid sun gear.
- Each planetary gear enters the state described below.

Rear planetary gear

Name	Rear sun gear	Rear carrier	Rear internal gear
Condition	—	input/Output	—
Direction of rotation	Clockwise revolution	Clockwise revolution	Clockwise revolution
Number of revolutions	Same number of revolution as the rear carrier	Same number of revolution as the input shaft	Same number of revolution as the rear carrier

Mid planetary gear

Name	Mid sun gear	Mid carrier	Mid internal gear
Condition	—	Output	Input
Direction of rotation	Clockwise revolution	Clockwise revolution	Clockwise revolution
Number of revolutions	Same number of revolution as the mid internal gear	Same number of revolution as the mid internal gear	Same number of revolution as the input shaft

“D6”, “DS6” and “M6” Positions

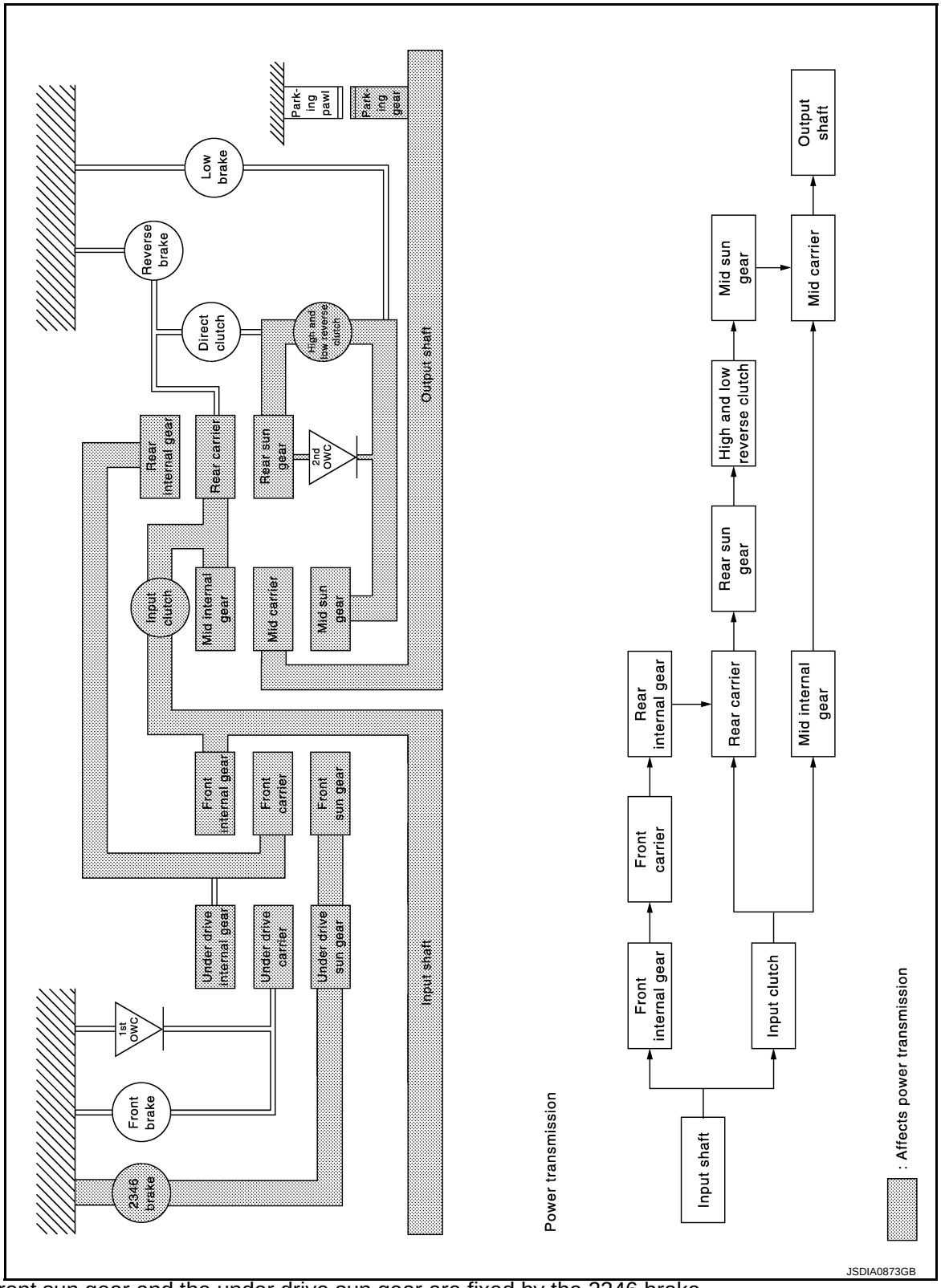

- The front sun gear and the under drive sun gear are fixed by the 2346 brake.
- The input clutch gets engaged and connects the mid internal gear with the rear carrier.
- The high and low reverse clutch gets engaged and connects the rear sun gear with the mid sun gear.
- Each planetary gear enters the state described below.

Front planetary gear

Name	Front sun gear	Front carrier	Front internal gear
Condition	Fixed	Output	Input
Direction of rotation	—	Clockwise revolution	Clockwise revolution
Number of revolutions	—	Deceleration from front internal gear	Same number of revolution as the input shaft

Rear planetary gear

Name	Rear sun gear	Rear carrier	Rear internal gear
Condition	—	Input/Output	Input
Direction of rotation	Clockwise revolution	Clockwise revolution	Clockwise revolution
Number of revolutions	Acceleration from rear carrier	Same number of revolution as the input shaft	Same number of revolution as the front carrier

Mid planetary gear

Name	Mid sun gear	Mid carrier	Mid internal gear
Condition	—	Output	Input
Direction of rotation	Clockwise revolution	Clockwise revolution	Clockwise revolution
Number of revolutions	Acceleration from mid internal gear	Acceleration from mid internal gear	Same number of revolution as the input shaft

“D7”, “DS7” and “M7” Positions

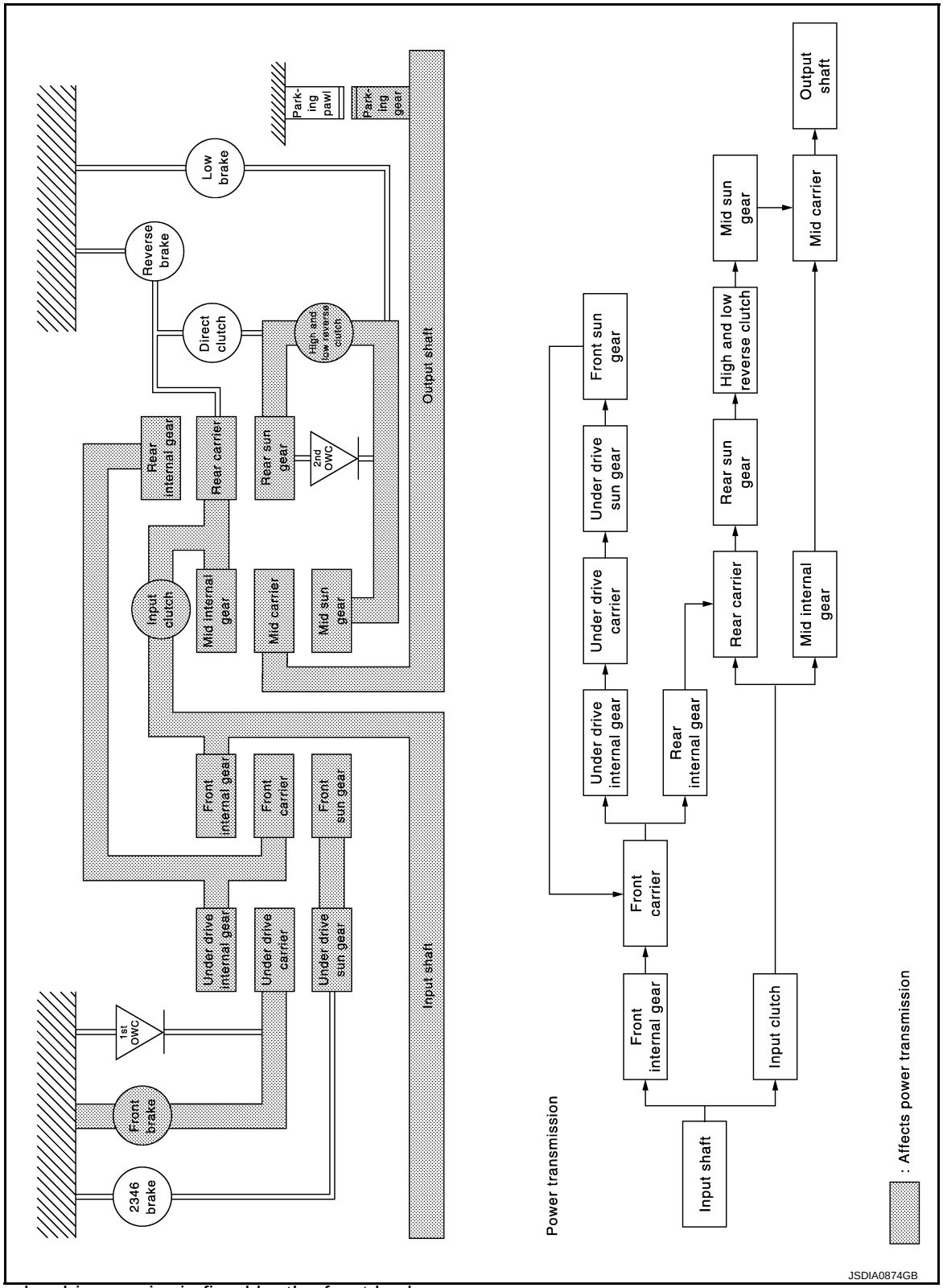

- The under drive carrier is fixed by the front brake.
- The input clutch gets engaged and connects the mid internal gear with the rear carrier.
- The high and low reverse clutch gets engaged and connects the rear sun gear with the mid sun gear.
- Each planetary gear enters state described below.

Front planetary gear

Name	Front sun gear	Front carrier	Front internal gear
Condition	—	Output	Input
Direction of rotation	Counterclockwise revolution	Clockwise revolution	Clockwise revolution
Number of revolutions	Deceleration from front internal gear	Deceleration from front internal gear	Same number of revolution as the input shaft

Under drive planetary gear

Name	Under drive sun gear	Under drive carrier	Under drive internal gear
Condition	—	Fixed	Input/Output
Direction of rotation	Counterclockwise revolution	—	Clockwise revolution
Number of revolutions	Acceleration from under drive internal gear	—	Same number of revolution as the front carrier

Rear planetary gear

Name	Rear sun gear	Rear carrier	Rear internal gear
Condition	—	Input/Output	Input
Direction of rotation	Clockwise revolution	Clockwise revolution	Clockwise revolution
Number of revolutions	Acceleration from rear carrier	Same number of revolution as the input shaft	Same number of revolution as the under drive internal gear

Mid planetary gear

Name	Mid sun gear	Mid carrier	Mid internal gear
Condition	—	Output	Input
Direction of rotation	Clockwise revolution	Clockwise revolution	Clockwise revolution
Number of revolutions	Acceleration from mid internal gear	Acceleration from mid internal gear	Same number of revolution as the input shaft

“R” Position

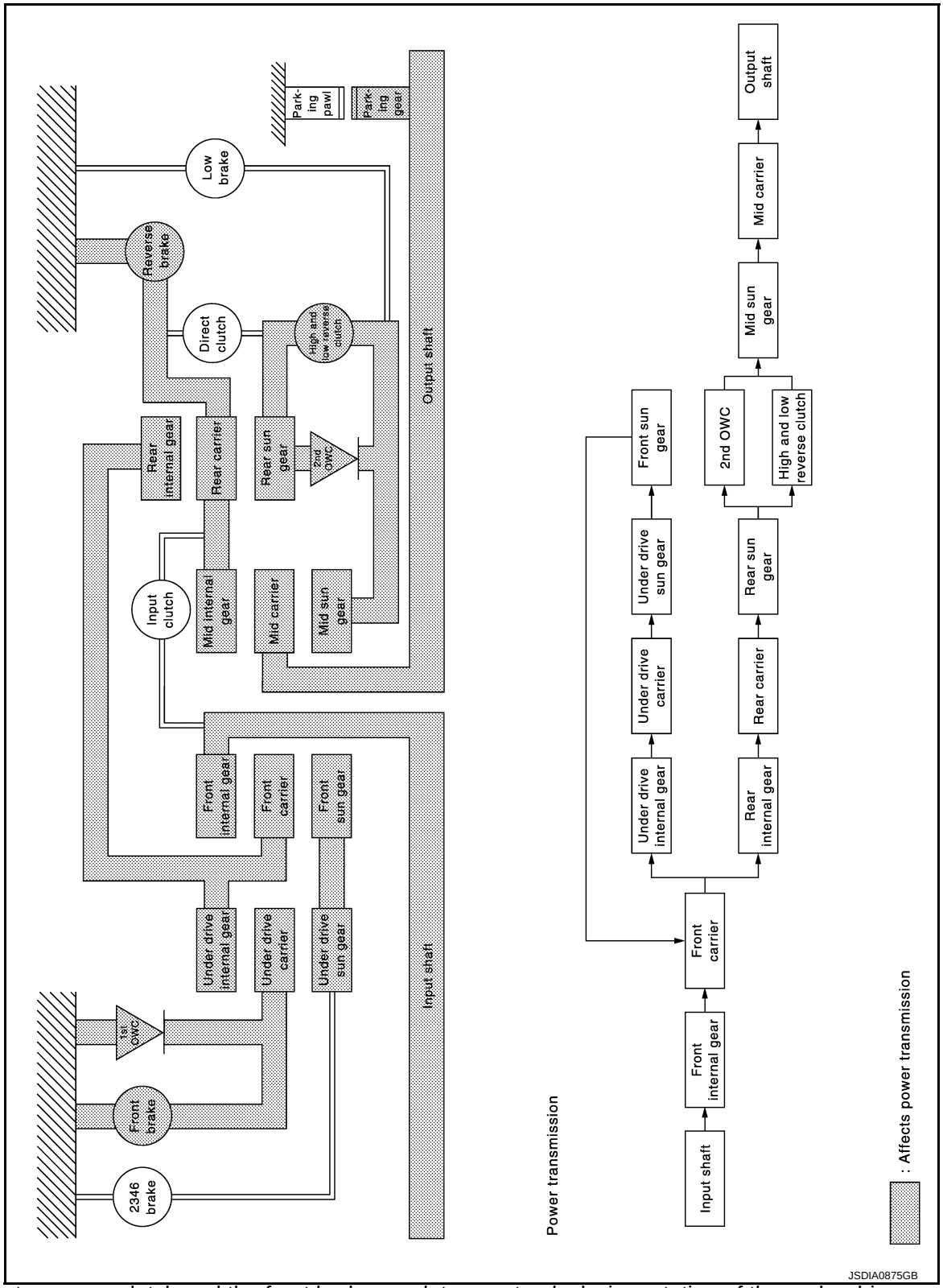

- The 1st one-way clutch and the front brake regulate counterclockwise rotation of the under drive carrier.
  NOTE:
  The front brake operates at the fixed speed or less.
- The rear carrier and the mid internal gear are fixed by the reverse brake.
- The mid sun gear rotates at the same speed as the rear sun gear by operation of the 2nd one-way clutch and the high and low reverse clutch.
  NOTE:
  The high and low reverse clutch operates at the fixed speed or less.

• Each planetary gear enters the state described below.

Front planetary gear

Name	Front sun gear	Front carrier	Front internal gear
Condition	—	Output	Input
Direction of rotation	Counterclockwise revolution	Clockwise revolution	Clockwise revolution
Number of revolutions	Deceleration from front internal gear	Deceleration from front internal gear	Same number of revolution as the input shaft

Under drive planetary gear

Name	Under drive sun gear	Under drive carrier	Under drive internal gear
Condition	—	Fixed	Input/Output
Direction of rotation	Counterclockwise revolution	—	Clockwise revolution
Number of revolutions	Acceleration from under drive internal gear	—	Same number of revolution as the front carrier

Rear planetary gear

Name	Rear sun gear	Rear carrier	Rear internal gear
Condition	Output	Fixed	Input
Direction of rotation	Counterclockwise revolution	—	Clockwise revolution
Number of revolutions	Acceleration from rear internal gear	—	Same number of revolution as the under drive internal gear

Mid planetary gear

Name	Mid sun gear	Mid carrier	Mid internal gear
Condition	Input	Output	Fixed
Direction of rotation	Counterclockwise revolution	Counterclockwise revolution	—
Number of revolutions	Same number of revolution as the rear sun gear	Deceleration from mid sun gear	—

Component Parts Location

INFOID:0000000006207662

Refer to TM-122, "Cross-Sectional View".

Component Description

INFOID:0000000006207663

Name of the Part (Abbreviation)	Function
Front brake (FR/B)	Fastens the under drive carrier.
Input clutch (I/C)	Connects the input shaft, the mid internal gear and the rear carrier.
Direct clutch (D/C)	Connects the rear carrier and the rear sun gear.
High and low reverse clutch (HLR/C)	Connects the rear sun gear and the mid sun gear.
Reverse brake (R/B)	Fastens the rear carrier.
Low brake (L/B)	Fastens the mid sun gear.
2346 brake (2346/B)	Fastens the under drive sun gear.
1st one-way clutch (1st OWC)	Allows the under drive carrier to turn freely in the forward direction but fastens it for reverse rotation.
2nd one-way clutch (2nd OWC)	Allows the rear sun gear to turn freely in the forward direction but fastens it for reverse rotation.
Torque converter	Amplifies driving force the engine, and transmits it to transmission input shaft.
Oil pump	Driven by the engine, oil pump supplies oil to torque converter, control valve assembly, and each lubricating system.

SHIFT LOCK SYSTEM

System Description

INFOID:0000000006207664

- Shift lock prevents an unintentional start of the vehicle that may be caused by an incorrect operation while selector lever is in the “P” position.
- Selector lever can be shifted from the “P” position to another position when the following conditions are satisfied.

- Ignition switch ON
- Stop lamp switch is ON (brake pedal is depressed)
- Selector lever knob button is pressed

SHIFT LOCK OPERATION AT “P” POSITION

When Brake Pedal Is Not Depressed (No Shift Operation Allowed)

The shift lock solenoid (A) inside the shift lock unit is not energized if the brake pedal is not depressed while the ignition switch is ON.
The lock plate (B) lowers according to the downward movement of the position pin (C) when the selector button (D) is pressed, and presses only slider B (E) into the shift lock unit. Slider A (F) located below the lock plate prevents the downward movement of the lock plate with the spring force. The selector lever cannot be shifted from the “P” position for this reason.
However, slider A is forcibly pressed into the shift lock unit, allowing the selector lever to shift if the shift lock release button is pressed.

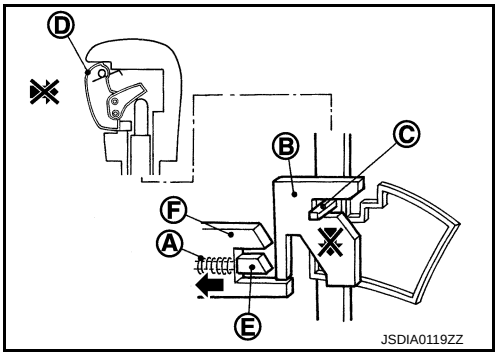

When Brake Pedal Is Depressed (Shift Operation Allowed)

The shift lock solenoid (A) inside the shift lock unit is energized and the relative positions of sliders A (B) and B (C) are maintained when the brake pedal is depressed while the ignition switch is ON.
The lock plate (D) lowers according to the downward movement of the position pin (E), thrusting away sliders A and B, when the selector button (F) is pressed.
The position pin lowers to the position that allows shift operation for this reason. As a result, the selector lever can be shifted out of the P position.

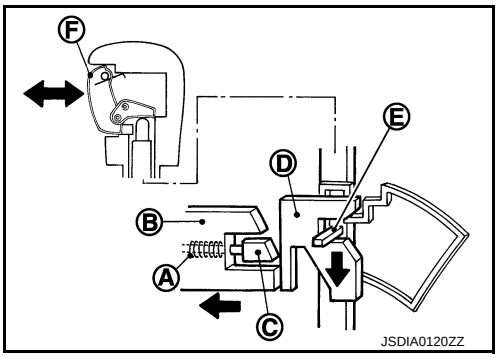

OPERATION AT OTHER THAN “P” POSITION

The shift lock function will not operate at any position other than “P” because the lock plate (A) is only set for the “P” position. Accordingly, the selector lever can be shifted to any position regardless of the brake operation.
The position pin (B) enters the “P” position thrusting away the lock plate when the selector lever is shifted to the “P” position. Then, the shift mechanism is locked when the selector button (C) is released.

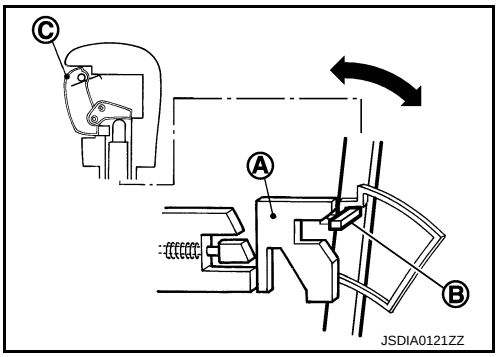

“P” POSITION RETAINING MECHANISM (IGNITION SWITCH LOCK)

When ignition switch is not in the ON position, power is not applied to the shift lock solenoid in the shift lock unit. This causes shift lock state, and then “P” position is retained.
When an actuating system in the shift lock unit has a malfunction, selector lever is unable to operate from the “P” position even when pressing the brake pedal with the ignition switch ON. However, when pressing the shift lock release button, slider A is forcibly pressed into the shift lock unit. This allows shift lock to be released and selector lever enables the select operation from the “P” position.

CAUTION:

Never use the shift lock release button except when the select lever is inoperative even when pressing the brake pedal with the ignition switch ON.

Component Parts Location

INFOID:0000000006207665

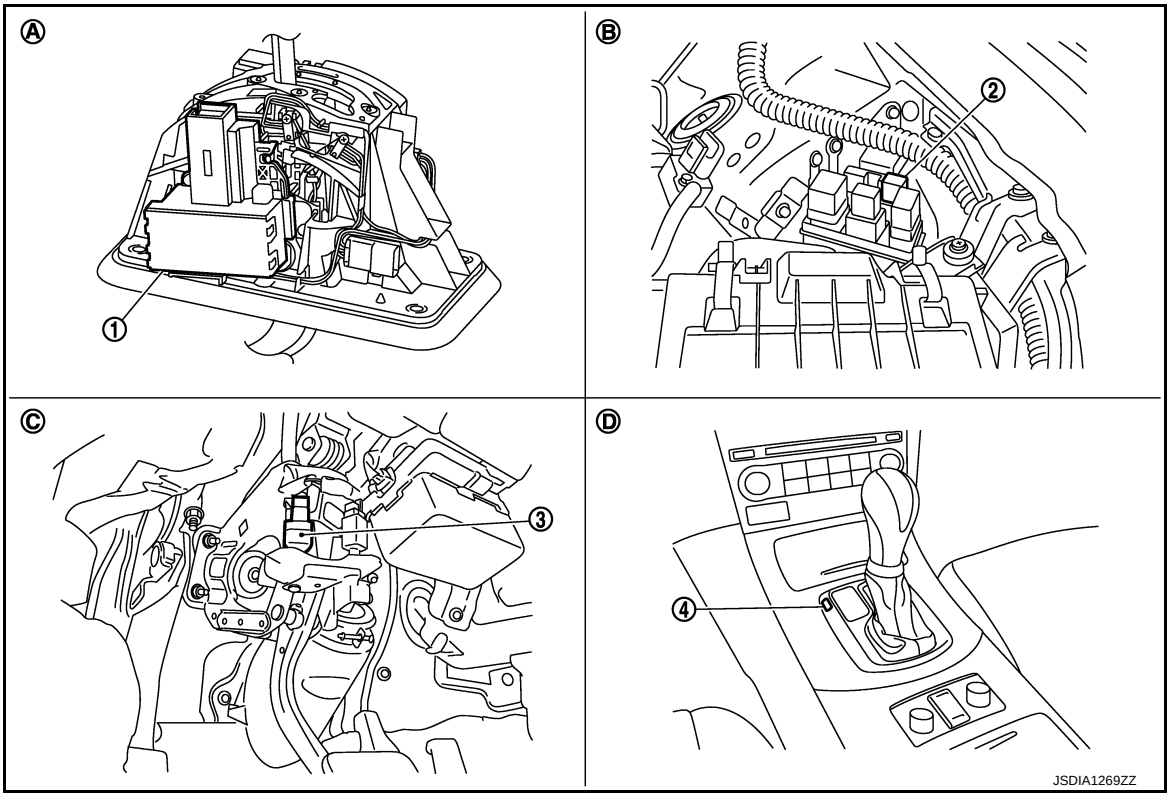

1. Shift lock unit
2. Shift lock relay*1
3. Stop lamp switch
4. Shift lock cover *2
- A. A/T shift selector assembly
- B. Engine room LH
- C. Brake pedal, upper
- D. Center console

*1: With ICC

*2: Shift lock release button becomes operative by removing shift lock cover.

Component Description

INFOID:0000000006207666

Component		Function
Shift lock unit	Shift lock solenoid	Activated by the ignition switch and stop lamp signals, it holds the relative positions of sliders A and B.
	Lock plate	Restricts position pin moving.
	Shift lock release button	Pressing the shift lock release button cancels the shift lock forcibly.
Position pin		Links with selector knob button and restricts selector lever shift operation.
Stop lamp switch		With ICC • When brake pedal is depressed, stop lamp switch turns ON. • When stop lamp switch turns ON, power is supplied to shift lock relay. Without ICC • When brake pedal is depressed, stop lamp switch turns ON. • When stop lamp switch turns ON, power is supplied to shift lock unit.
Shift lock relay*		Current flow to stop lamp switch allows shift lock relay contact ON, and then power is applied to shift lock unit.

*: With ICC

ON BOARD DIAGNOSTIC (OBD) SYSTEM

Diagnosis Description

INFOID:0000000006207667

The A/T system has two self-diagnostic systems.
The first is the emission-related on board diagnostic system (OBD-II) performed by the TCM in combination with the ECM. A malfunction is indicated by the MIL (malfunction indicator lamp) and is stored as a DTC in the ECM memory and in the TCM memory.
The second is the TCM original self-diagnosis indicated by the TCM. A malfunction history is stored in the TCM memory. The detected items are overlapped with OBD-II self-diagnostic items. For details, refer to TM-251, "DTC Index".

OBD FUNCTION

The ECM provides emission-related on board diagnostic (OBD-II) functions for the A/T system.
One function is to receive a signal from the TCM used with OBD-related parts of the A/T system. The signal is sent to the ECM when a malfunction occurs in the corresponding OBD-related part.
The other function is to indicate a diagnostic result by means of the MIL (malfunction indicator lamp) on the instrument panel. Sensors, switches and solenoid valves are used as sensing elements.
The MIL automatically illuminates in “One or Two Trip Detection Logic” when a malfunction is sensed in relation to A/T system parts. For details, refer to EC-751, "Diagnosis Description" (VQ25HR), EC-140, "Diagnosis Description" (VQ37VHR).

DIAGNOSIS SYSTEM (TCM)

CONSULT-III Function (TRANSMISSION)

INFOID:0000000006207668

CONSULT-III APPLICATION ITEMS

Diagnostic test mode	Function
Work Support	This mode enables a technician to adjust some devices faster and more accurately.
Self Diagnostic Results	Retrieve DTC from ECU and display diagnostic items.
Data Monitor	Monitor the input/output signal of the control unit in real time.
CAN Diagnosis	This mode displays a network diagnosis result about CAN by a diagram.
CAN Diagnostic Support Monitor	It monitors the starts of CAN communication.
DTC & SRT confirmation	The status of system monitoring tests and the self-diagnosis status/result can be confirmed.
ECU Identification	Display the ECU identification number (part number etc.) of the selected system.
Function Test*	This mode can show results of self-diagnosis of ECU with either “OK” or “NG”. For engine, more practical tests regarding sensors/switches and/or actuators are available.
Special Function*	Other results or histories, etc. that are recorded in ECU are displayed.

*: Although “Function Test” and “Special Function” are selectable, do not use its.

SELF DIAGNOSTIC RESULTS

Refer to TM-251, "DTC Index".

IGN Counter

The IGN counter is indicated in Freeze frame data (FFD) and indicates the number of times that the ignition switch is turned ON after returning to the normal state from DTC.

- CAN malfunction
  - The number is 0 when a malfunction is detected now.
  - The number increases like 1 → 2 → 3...38 → 39 after returning to the normal condition whenever ignition switch OFF → ON.
  - The number is fixed to 39 until the self-diagnosis results are erased if it is over 39.
- Other than CAN malfunction
  - The number is 0 when a malfunction is detected now.
  - The number increases like 1 → 2 → 3...254 → 255 after returning to the normal condition whenever ignition switch OFF → ON.
  - The number is fixed to255 until the self-diagnosis results are erased if it is over 255.

DATA MONITOR

X: Standard, —: Not applicable, ▼: Option

Monitored item (Unit)		Monitor Item Selection			Remarks
		ECU INPUT SIGNALS	MAIN SIGNALS	SELECTION FROM ITEM	
VHCL/S SE-A/T	(km/h or mph)	X	X	▼	Displays the vehicle speed calculated by the TCM from the output shaft revolution.
ESTM VSP SIG	(km/h or mph)	X	—	▼	Displays the vehicle speed signal received via CAN communication.
OUTPUT REV	(rpm)	X	X	▼	Displays the output shaft revolution calculated from the pulse signal of output speed sensor.
INPUT SPEED	(rpm)	X	X	▼	Displays the input speed calculated from front sun gear revolution and front carrier revolution.
F SUN GR REV	(rpm)	—	—	▼	Displays the front sun gear revolution calculated from the pulse signal of input speed sensor 1.

Monitored item (Unit)		Monitor Item Selection			Remarks
		ECU INPUT SIGNALS	MAIN SIGNALS	SELECTION FROM ITEM	
F CARR GR REV	(rpm)	—	—	▼	Displays the front carrier gear revolution calculated from the pulse signal of input speed sensor 2.
ENGINE SPEED	(rpm)	X	X	▼	Displays the engine speed received via CAN communication.
TC SLIP SPEED	(rpm)	—	X	▼	Displays the revolution difference between input speed and engine speed.
ACCELE POSI	(0.0/8)	X	—	▼	Displays the accelerator position estimated value received via CAN communication.
THROTTLE POSI	(0.0/8)	X	X	▼	Displays the throttle position received via CAN communication.
ATF TEMP 1	(°C or °F)	X	X	▼	Displays the ATF temperature of oil pan calculated from the signal voltage of A/T fluid temperature sensor.
ATF TEMP 2	(°C or °F)	X	X	▼	Displays the ATF temperature estimated value of torque converter outlet calculated from the signal voltage of A/T fluid temperature sensor.
ATF TEMP SE 1	(V)	—	—	▼	Displays the signal voltage of A/T fluid temperature sensor.
BATTERY VOLT	(V)	X	—	▼	Displays the power supply voltage of TCM.
LINE PRES SOL	(A)	—	X	▼	Displays the command current from TCM to the line pressure solenoid.
TCC SOLENOID	(A)	—	X	▼	Displays the command current from TCM to the torque converter clutch solenoid.
L/B SOLENOID	(A)	—	X	▼	Displays the command current from TCM to the low brake solenoid.
FR/B SOLENOID	(A)	—	X	▼	Displays the command current from TCM to the front brake solenoid.
HLR/C SOL	(A)	—	X	▼	Displays the command current from TCM to the high and low reverse clutch solenoid.
I/C SOLENOID	(A)	—	X	▼	Displays the command current from TCM to the input clutch solenoid.
D/C SOLENOID	(A)	—	X	▼	Displays the command current from TCM to the direct clutch solenoid.
2346/B SOL	(A)	—	X	▼	Displays the command current from TCM to the 2346 brake solenoid.
L/P SOL MON	(A)	—	—	▼	Monitors the command current from TCM to the line pressure solenoid, and displays the monitor value.
TCC SOL MON	(A)	—	—	▼	Monitors the command current from TCM to the torque converter clutch solenoid, and displays the monitor value.
L/B SOL MON	(A)	—	—	▼	Monitors the command current from TCM to the low brake solenoid, and displays the monitor value.
FR/B SOL MON	(A)	—	—	▼	Monitors the command current from TCM to the front brake solenoid, and displays the monitor value.

Monitored item (Unit)	Monitor Item Selection			Remarks
	ECU INPUT SIGNALS	MAIN SIGNALS	SELECTION FROM ITEM	
HLR/C SOL MON (A)	—	—	▼	Monitors the command current from TCM to the high and low reverse clutch solenoid, and displays the monitor value.
I/C SOL MON (A)	—	—	▼	Monitors the command current from TCM to the input clutch solenoid, and displays the monitor value.
D/C SOL MON (A)	—	—	▼	Monitors the command current from TCM to the direct clutch solenoid, and displays the monitor value.
2346/B SOL MON (A)	—	—	▼	Monitors the command current from TCM to the 2346 brake solenoid, and displays the monitor value.
GEAR RATIO	—	X	▼	Displays the gear ratio calculated from input speed and output revolution.
ENGINE TORQUE (Nm)	—	—	▼	Displays the engine torque estimated value received via CAN communication.
ENG TORQUE D (Nm)	—	—	▼	Displays the engine torque estimated value reflected the requested torque of each control unit received via CAN communication.
INPUT TRQ S (Nm)	—	—	▼	Displays the input torque using for the oil pressure calculation process of shift change control.
INPUT TRQ L/P (Nm)	—	—	▼	Displays the input torque using for the oil pressure calculation process of line pressure control.
TRGT PRES L/P (kPa)	—	—	▼	Displays the target oil pressure value of torque converter clutch solenoid valve calculated by the oil pressure calculation process of lock-up control.
TRGT PRES TCC (kPa, kg/cm^2 or psi)	—	—	▼	Displays the target oil pressure value of torque converter clutch solenoid valve calculated by the oil pressure calculation process of shift change control.
TRGT PRES L/B (kPa, kg/cm^2 or psi)	—	—	▼	Displays the target oil pressure value of low brake solenoid valve calculated by the oil pressure calculation process of shift change control.
TRGT PRE FR/B (kPa, kg/cm^2 or psi)	—	—	▼	Displays the target oil pressure value of front brake solenoid valve calculated by the oil pressure calculation process of shift change control.
TRG PRE HLR/C (kPa, kg/cm^2 or psi)	—	—	▼	Displays the target oil pressure value of high and low reverse clutch solenoid valve calculated by the oil pressure calculation process of shift change control.
TRGT PRES I/C (kPa, kg/cm^2 or psi)	—	—	▼	Displays the target oil pressure value of input clutch solenoid valve calculated by the oil pressure calculation process of shift change control.
TRGT PRES D/C (kPa, kg/cm^2 or psi)	—	—	▼	Displays the target oil pressure value of direct clutch solenoid valve calculated by the oil pressure calculation process of shift change control.

Monitored item (Unit)		Monitor Item Selection			Remarks
		ECU INPUT SIGNALS	MAIN SIGNALS	SELECTION FROM ITEM	
TRG PRE 2346/B	(kPa, kg/cm^2 or psi)	—	—	▼	Displays the target oil pressure value of 2346 brake solenoid valve calculated by the oil pressure calculation process of shift change control.
SHIFT PATTERN		—	—	▼	Displays the gear change data using the shift pattern control.
VEHICLE SPEED	(km/h or mph)	—	—	▼	Displays the vehicle speed for control using the control of TCM.
RANGE SW 4	(ON/OFF)	X	—	▼	Displays the operation status of transmission range switch 4.
RANGE SW 3	(ON/OFF)	X	—	▼	Displays the operation status of transmission range switch 3.
RANGE SW 2	(ON/OFF)	X	—	▼	Displays the operation status of transmission range switch 2.
RANGE SW 1	(ON/OFF)	X	—	▼	Displays the operation status of transmission range switch 1.
SFT DWN ST SW	(ON/OFF)	X	—	▼	Displays the operation status of paddle shifter (down switch).
SFT UP ST SW	(ON/OFF)	X	—	▼	Displays the operation status of paddle shifter (up switch).
DOWN SW LEVER	(ON/OFF)	X	—	▼	Displays the operation status of selector lever (down switch).
UP SW LEVER	(ON/OFF)	X	—	▼	Displays the operation status of selector lever (up switch).
NON M-MODE SW	(ON/OFF)	X	—	▼	Displays whether the selector lever is in any position other than manual shift gate position.
MANU MODE SW	(ON/OFF)	X	—	▼	Displays whether the selector lever is in the manual shift gate position.
DS RANGE	(ON/OFF)	—	—	▼	Displays whether it is the DS mode.
1 POSITION SW	(ON/OFF)	X	—	▼	• Displays the reception status of 1 position switch signal received via CAN communication. • Not mounted but displayed.
OD CONT SW	(ON/OFF)	X	—	▼	• Displays the reception status of overdrive control switch signal received via CAN communication. • Not mounted but displayed.
BRAKESW	(ON/OFF)	X	—	▼	Displays the reception status of stop lamp switch signal received via CAN communication.
POWERSHIFT SW	(ON/OFF)	X	—	▼	• Displays the reception status of POWER mode signal received via CAN communication. • Not mounted but displayed.
ASCD-OD CUT	(ON/OFF)	X	—	▼	Displays the reception status of ASCD OD cancel request signal received via CAN communication.
ASCD-CRUISE	(ON/OFF)	X	—	▼	Displays the reception status of ASCD operation signal received via CAN communication.
ABS SIGNAL	(ON/OFF)	X	—	▼	Displays the reception status of ABS operation signal received via CAN communication.

Monitored item (Unit)		Monitor Item Selection			Remarks
		ECU INPUT SIGNALS	MAIN SIGNALS	SELECTION FROM ITEM	
TCS GR/P KEEP	(ON/OFF)	X	—	▼	Displays the reception status of TCS gear keep request signal received via CAN communication.
TCS SIGNAL 2	(ON/OFF)	X	—	▼	Displays whether the reception value of A/T shift schedule change demand signal received via CAN communication is “cold”.
TCS SIGNAL 1	(ON/OFF)	X	—	▼	Displays whether the reception value of A/T shift schedule change demand signal received via CAN communication is “warm”.
LOW/B PARTS	(FAIL/NOTFAIL)	—	—	▼	Displays whether the identified malfunction point judged by TCM is the related parts of low brake.
HC/IC/FRB PARTS	(FAIL/NOTFAIL)	—	—	▼	Displays whether the identified malfunction point judged by TCM is the related parts of high and low reversed clutch, input clutch or front brake.
IC/FRB PARTS	(FAIL/NOTFAIL)	—	—	▼	Displays whether the identified malfunction point judged by TCM is the related parts of input clutch or front brake.
HLR/C PARTS	(FAIL/NOTFAIL)	—	—	▼	Displays whether the identified malfunction point judged by TCM is the related parts of high and low reversed clutch.
W/O THL POS	(ON/OFF)	X	—	▼	Displays the kickdown condition signal status received via CAN communication.
CLSD THL POS	(ON/OFF)	X	—	▼	Displays the idling status signal status received via CAN communication.
DRV CST JUDGE	(DRIVE/COAST)	—	—	▼	Displays the judgment results of “driving” or “coasting” judged by TCM.
SHIFT IND SIGNAL		—	—	▼	Displays the transmission value of shift position signal transmitted via CAN communication.
STARTER RELAY	(ON/OFF)	—	—	▼	Displays the command status from TCM to starter relay.
F-SAFE IND/L	(ON/OFF)	—	—	▼	Displays the transmission status of A/T CHECK indicator lamp signal transmitted via CAN communication.
ATF WARN LAMP	(ON/OFF)	—	—	▼	• Displays the transmission status of ATF temperature signal transmitted via CAN communication. • Not mounted but displayed.
MANU MODE IND	(ON/OFF)	—	—	▼	Displays the transmission status of manual mode signal transmitted via CAN communication.
ON OFF SOL MON	(ON/OFF)	—	—	▼	Monitors the command value from TCM to the anti-interlock solenoid, and displays the monitor status.
START RLY MON	(ON/OFF)	—	—	▼	Monitors the command value from TCM to the starter relay, and displays the monitor status.
ON OFF SOL	(ON/OFF)	—	—	▼	Displays the command status from TCM to anti-interlock solenoid.
SLCT LVR POSI		—	X	▼	Displays the shift positions recognized by TCM.

Monitored item (Unit)	Monitor Item Selection			Remarks
	ECU INPUT SIGNALS	MAIN SIGNALS	SELECTION FROM ITEM	
GEAR	—	X	▼	Displays the current transmission gear position recognized by TCM.
NEXT GR POSI	—	—	▼	Displays the target gear position of gear change that is calculated based on the vehicle speed information and throttle information.
SHIFT MODE	—	—	▼	Displays the transmission driving mode recognized by TCM.
D/C PARTS (FAIL/NOTFAIL)	—	—	▼	Displays whether the identified malfunction point judged by TCM is the related parts of direct clutch.
FR/B PARTS (FAIL/NOTFAIL)	—	—	▼	Displays whether the identified malfunction point judged by TCM is the related parts of front brake.
2346/B PARTS (FAIL/NOTFAIL)	—	—	▼	Displays whether the identified malfunction point judged by TCM is the related parts of 2346 brake.
2346B/DC PARTS (FAIL/NOTFAIL)	—	—	▼	Displays whether the identified malfunction point judged by TCM is the related parts of 2346 brake or direct clutch.

DTC & SRT CONFIRMATION

Item	Description	Check item
1ST GR FNCTN P0731	Following items for “1GR incorrect ratio” can be confirmed. • Self-diagnosis status (whether the diagnosis is being performed or not) • Self-diagnostic results (OK or NG)	• Input clutch solenoid valve • Front brake solenoid valve • Direct clutch solenoid valve • High and low reverse clutch solenoid valve • Low brake solenoid valve • 2346 brake solenoid valve • Anti-interlock solenoid valve • Each clutch and brake • Output speed sensor • Input speed sensor 1, 2 • Hydraulic control circuit
2ND GR FNCTN P0732	Following items for “2GR incorrect ratio” can be confirmed. • Self-diagnosis status (whether the diagnosis is being performed or not) • Self-diagnostic results (OK or NG)	
3RD GR FNCTN P0733	Following items for “3GR incorrect ratio” can be confirmed. • Self-diagnosis status (whether the diagnosis is being performed or not) • Self-diagnostic results (OK or NG)	
4TH GR FNCTN P0734	Following items for “4GR incorrect ratio” can be confirmed. • Self-diagnosis status (whether the diagnosis is being performed or not) • Self-diagnostic results (OK or NG)	
5TH GR FNCTN P0735	Following items for “5GR incorrect ratio” can be confirmed. • Self-diagnosis status (whether the diagnosis is being performed or not) • Self-diagnostic results (OK or NG)	
6TH GR FNCTN P0729	Following items for “6GR incorrect ratio” can be confirmed. • Self-diagnosis status (whether the diagnosis is being performed or not) • Self-diagnostic results (OK or NG)	
7TH GR FNCTN P1734	Following items for “7GR incorrect ratio” can be confirmed. • Self-diagnosis status (whether the diagnosis is being performed or not) • Self-diagnostic results (OK or NG)	
TCC SOL FUNCTN CHECK	Following items for “TCC solenoid function” can be confirmed. • Self-diagnosis status (whether the diagnosis is being performed or not) • Self-diagnostic results (OK or NG)	• Harness or connectors • Torque converter clutch solenoid valve • Torque converter • Input speed sensor 1, 2 • Hydraulic control circuit

DTC/CIRCUIT DIAGNOSIS

U0300 CAN COMMUNICATION DATA

Description

INFOID:0000000006207669

The amount of data transmitted from each control unit is read.

DTC Logic

INFOID:0000000006207670

DTC DETECTION LOGIC

DTC	Trouble diagnosis name	DTC is detected if...	Possible cause
U0300	Internal Control Module Software Incompatibility	When the amount of data transmitted from each control unit is smaller than the specified amount.	Control units other than TCM.

DTC CONFIRMATION PROCEDURE

1. PRECONDITIONING

If “DTC CONFIRMATION PROCEDURE” has been previously conducted, always turn ignition switch OFF and wait at least 10 seconds before conducting the next test.

>> GO TO 2.

2. CHECK DTC DETECTION

With CONSULT-III

1. Turn ignition switch ON and wait 2 seconds or more.
2. Perform “Self Diagnostic Results” in “TRANSMISSION”.

Is “U0300” detected?

YES >> Go to TM-157, "Diagnosis Procedure".
NO >> INSPECTION END

Diagnosis Procedure

INFOID:0000000006207671

1. CHECK CONTROL UNIT

Check the number of control units replaced before detecting “U0300”.

Is the number of replaced control units one?

YES >> Since the replaced control unit may be out of specifications, check the part number and specifications.
NO >> GO TO 2.

2. INSPECTION CONTROL UNIT

With CONSULT-III

1. Remove one of the replaced control units.
2. Install the previous control unit mounted before replacement.
3. Turn ignition switch ON and wait 2 seconds or more.
4. Perform “Self Diagnostic Results” in “TRANSMISSION”.

Is “U0300” detected?

YES >> Turn OFF the ignition switch to check the other control units in the same method.
NO >> Since the removed control unit may be out of specifications, check the part number and specifications.

U1000 CAN COMM CIRCUIT

Description

INFOID:0000000006207672

CAN (Controller Area Network) is a serial communication line for real-time application. It is an on-vehicle multiplex communication line with high data communication speed and excellent malfunction detection ability. Many electronic control units are equipped onto a vehicle, and each control unit shares information and links with other control units during operation (not independently). In CAN communication, control units are connected with 2 communication lines (CAN-H line, CAN-L line) allowing a high rate of information transmission with less wiring. Each control unit transmits/receives data but selectively reads required data only.

DTC Logic

INFOID:0000000006207673

DTC DETECTION LOGIC

DTC	Trouble diagnosis name	DTC is detected if...	Possible cause
U1000	CAN Communication Line	TCM cannot transmit or receive CAN communication signals continuously for 2 seconds or more when the ignition switch is ON.	• Harness or connectors (CAN communication line is open or shorted.) • TCM

DTC CONFIRMATION PROCEDURE

1.PRECONDITIONING

If “DTC CONFIRMATION PROCEDURE” is previously conducted, always turn ignition switch OFF and wait at least 10 seconds before performing the next test.

>> GO TO 2.

2.CHECK DTC DETECTION

With CONSULT-III

1. Start the engine.
2. Run engine for at least 2 consecutive seconds at idle speed.
3. Perform “Self Diagnostic Results” in “TRANSMISSION”.

With GST

Follow the procedure “With CONSULT-III”

Is “U1000” detected?

YES >> Go to TM-158, "Diagnosis Procedure".
NO >> INSPECTION END

Diagnosis Procedure

INFOID:0000000006207674

Go to LAN-17, "Trouble Diagnosis Flow Chart".

P0615 STARTER RELAY

Description

INFOID:0000000006207675

TCM prohibits cranking other than at “P” or “N” position.

DTC Logic

INFOID:0000000006207676

DTC DETECTION LOGIC

DTC	Trouble diagnosis name	DTC is detected if...	Possible cause
P0615	Starter Relay Circuit	The starter monitor value is OFF when the ignition switch is ON at the “P” and “N” positions.	• Harness or connectors (Starter relay and TCM circuit is open or shorted.) • Starter relay circuit

DTC CONFIRMATION PROCEDURE

1.PRECONDITIONING

If “DTC CONFIRMATION PROCEDURE” is previously conducted, always turn ignition switch OFF and wait at least 10 seconds before performing the next test.

>> GO TO 2.

2.CHECK DTC DETECTION

With CONSULT-III

1. Shift the selector lever to “P” and “N” positions.
2. Turn ignition switch ON and wait 2 seconds or more.
3. Perform “Self Diagnostic Results” in “TRANSMISSION”.

Is “P0615” detected?

YES >> Go to TM-159, "Diagnosis Procedure".
NO >> INSPECTION END

Diagnosis Procedure

INFOID:0000000006207677

1.CHECK STARTER RELAY SIGNAL

1. Turn ignition switch ON.
2. Check voltage between IPDM E/R connector terminal and ground.

IPDM E/R connector		Ground	Condition	Voltage (Approx.)
Connector	Terminal			
E5	30		Selector lever in “P” and “N” positions.	Battery voltage
			Selector lever in other positions.	0 V

Is the inspection result normal?

YES >> Check starter relay circuit. Refer to STR-9, "Wiring Diagram - STARTING SYSTEM -".
NO >> GO TO 2.

2. CHECK HARNESS BETWEEN A/T ASSEMBLY AND IPDM E/R (PART 1)

1. Turn ignition switch OFF.
2. Disconnect A/T assembly connector and IPDM E/R connector.
3. Check continuity between A/T assembly vehicle side harness connector terminal and IPDM E/R vehicle side harness connector terminal.

A/T assembly vehicle side harness connector		IPDM E/R vehicle side harness connector		Continuity
Connector	Terminal	Connector	Terminal	
F51	9	E5	30	Existed

Is the inspection result normal?

YES >> GO TO 3.
NO >> Repair or replace damaged parts.

3.CHECK HARNESS BETWEEN A/T ASSEMBLY AND IPDM E/R (PART 2)

Check continuity between A/T assembly vehicle side harness connector terminal and ground.

A/T assembly vehicle side harness connector		Ground	Continuity
Connector	Terminal		
F51	9		Not existed

Is the inspection result normal?

YES >> GO TO 4.
NO >> Repair or replace damaged parts.

4.CHECK JOINT CONNECTOR

1. Remove joint connector. Refer to TM-283, "Exploded View".
2. Check the continuity between joint connector terminals.

A/T assembly harness connector side	TCM harness connector side	Continuity
Terminal	Terminal	
9	9	Existed

Is the inspection result normal?

YES >> GO TO 5.
NO >> Repair or replace damaged parts.

5.CHECK INTERMITTENT INCIDENT

Refer to GI-43, "Intermittent Incident".

Is the inspection result normal?

YES >> Replace control valve & TCM. Refer to TM-283, "Exploded View".
NO >> Repair or replace damaged parts.

P0705 TRANSMISSION RANGE SENSOR A

Description

INFOID:0000000006207678

- The transmission range switch incorporates four contact switches. Each contact switch transmits an ON/OFF signal to the TCM.
- The TCM judges a select lever position from a combination of ON/OFF signals transmitted from each contact switch.

Select lever position	Transmission range switch			
	SW1	SW2	SW3	SW4
P	OFF	OFF	OFF	OFF
R	ON	OFF	OFF	ON
N	ON	ON	OFF	OFF
D and M	ON	ON	ON	ON

DTC Logic

INFOID:0000000006207679

DTC DETECTION LOGIC

DTC	Trouble diagnosis name	DTC is detected if...	Possible cause
P0705	Transmission Range Sensor A Circuit (PRNDL Input)	The TCM detects an ON/OFF combination pattern other than that of the PNP switches 1, 2, 3 and 4. (For ON/OFF combination patterns of PNP switches, refer to TM-161, "Description".)	• Harness or connectors (Transmission range switches 1, 2, 3, 4 and TCM circuit is open or shorted.) • Transmission range switches 1, 2, 3 and 4

DTC CONFIRMATION PROCEDURE

1.PRECONDITIONING

If “DTC CONFIRMATION PROCEDURE” is previously conducted, always turn ignition switch OFF and wait at least 10 seconds before performing the next test.

>> GO TO 2.

2.CHECK DTC DETECTION

With CONSULT-III

1. Start the engine.
2. Select “ACCELE POSI” and “VHCL/S SE-A/T” in “Data Monitor” in “TRANSMISSION”.
3. Shift the selector lever throughout the entire shift position from “P” to “D”. (Hold the selector lever at each position for 2 seconds or more)
4. Drive vehicle and maintain the following conditions for 2 seconds or more.

ACCELE POSI	: More than 1.0/8
VHCL/S SE-A/T	: 10 km/h (7 MPH) or more

5. Perform “Self Diagnostic Results” in “TRANSMISSION”.

With GST

Follow the procedure “With CONSULT-III”.

Is “P0705” detected?

YES >> Go to TM-161, "Diagnosis Procedure".
NO >> INSPECTION END

Diagnosis Procedure

INFOID:0000000006207680

1.CHECK INTERMITTENT INCIDENT

Refer to GI-43, "Intermittent Incident".

Is the inspection result normal?

YES >> Replace control valve & TCM. Refer to TM-283, "Exploded View".
NO >> Repair or replace damaged parts.

P0710 TRANSMISSION FLUID TEMPERATURE SENSOR A

Description

INFOID:0000000006207681

The A/T fluid temperature sensor detects the A/T fluid temperature and transmits a signal to the TCM.

DTC Logic

INFOID:0000000006207682

DTC DETECTION LOGIC

DTC	Trouble diagnosis name	DTC is detected if...	Possible cause
P0710	Transmission Fluid Temperature Sensor A Circuit	TCM judges that the A/T fluid temperature is -40 °C (-40 °F) or less continuously for 5 seconds while driving at 10 km/h (7 MPH) or more.	• Harness or connectors (Sensor circuit is open.) • A/T fluid temperature sensor
		TCM judges that the A/T fluid temperature is 180 °C (356 °F) or more continuously for 5 seconds.	• Harness or connectors (Sensor circuit is short.) • A/T fluid temperature sensor
		TCM judges the following conditions while driving the vehicle at 10 km/h (7 MPH) or more: • The time required for A/T fluid temperature to rise by 1 °C (1.8 °F) exceeds 14 minutes when A/T fluid temperature is -20 °C (-4 °F) or less. • The time required for A/T fluid temperature to rise by 1 °C (1.8 °F) exceeds 7 minutes when A/T fluid temperature is between -19 °C (-2 °F) and 0 °C (32 °F). • The time required for A/T fluid temperature to rise by 1 °C (1.8 °F) exceeds 4 minutes when A/T fluid temperature is between 1 °C (34 °F) and 20 °C (68 °F).	• Harness or connectors (Sensor circuit is stuck.) • A/T fluid temperature sensor

DTC CONFIRMATION PROCEDURE

CAUTION:

Always drive vehicle at a safe speed.

1.PRECONDITIONING

If “DTC CONFIRMATION PROCEDURE” is previously conducted, always turn ignition switch OFF and wait at least 10 seconds before performing the next test.

>> GO TO 2.

2.CHECK DTC DETECTION

With CONSULT-III

1. Start the engine.
2. Select “SLCT LVR POSI” and “VHCL/S SE-A/T” in “Data Monitor” in “TRANSMISSION”.
3. Drive vehicle and maintain the following conditions for 14 minutes or more.

SLCT LVR POSI	: D
VHCL/S SE-A/T	: 10 km/h (7 MPH) or more

4. Perform “Self Diagnostic Results” in “TRANSMISSION”.

With GST

Follow the procedure “With CONSULT-III”.

Is “P0710” detected?

YES >> Go to TM-164, "Diagnosis Procedure".
NO >> INSPECTION END

Diagnosis Procedure

INFOID:0000000006207683

1. CHECK INTERMITTENT INCIDENT

Refer to GI-43, "Intermittent Incident".

Is the inspection result normal?

YES >> Replace control valve & TCM. Refer to TM-283, "Exploded View".
NO >> Repair or replace damaged parts.

P0717 INPUT SPEED SENSOR A

Description

INFOID:0000000006207684

The input speed sensor detects input shaft rpm (revolutions per minute). It is located on the input side of the A/T. Monitors revolution of sensor 1 and sensor 2 for non-standard conditions.

DTC Logic

INFOID:0000000006207685

DTC DETECTION LOGIC

DTC	Trouble diagnosis name	DTC is detected if...	Possible cause
P0717	Input/Turbine Speed Sensor A Circuit No Signal	The revolution of input speed sensor 1 and/or 2 is 270 rpm or less.	• Harness or connectors (Sensor circuit is open.) • Input speed sensor 1 and/or 2

DTC CONFIRMATION PROCEDURE

CAUTION:

Always drive vehicle at a safe speed.

1.PRECONDITIONING

If “DTC CONFIRMATION PROCEDURE” is previously conducted, always turn ignition switch OFF and wait at least 10 seconds before performing the next test.

>> GO TO 2.

2.CHECK DTC DETECTION

With CONSULT-III

1. Start the engine.
2. Select “SLCT LVR POSI”, “GEAR”, “VHCL/S SE-A/T”, “CLSD THL POS” and “ENGINE SPEED” in “Data Monitor” in “TRANSMISSION”.
3. Drive vehicle and maintain the following conditions for 5 seconds or more.
   CAUTION:
   Keep the same gear position.
   NOTE:
   Driving the vehicle uphill (increased engine load) will help maintain the driving conditions required for this test.

SLCT LVR POSI	: D
GEAR	: 2nd, 3rd, 4th, 5th or 6th
VHCL/S SE-A/T	: More than 40 km/h (25 MPH)
CLSD THL POS	: OFF
ENGINE SPEED	: More than 1,500 rpm

4. Perform “Self Diagnostic Results” in “TRANSMISSION”.

With GST

Follow the procedure “With CONSULT-III”.

Is “P0717” detected?

YES >> Go to TM-165, "Diagnosis Procedure".
NO >> INSPECTION END

Diagnosis Procedure

INFOID:0000000006207686

1.CHECK INTERMITTENT INCIDENT

Refer to GI-43, "Intermittent Incident".

Is the inspection result normal?

YES >> Replace control valve & TCM. Refer to TM-283, "Exploded View".

NO >> Repair or replace damaged parts.

P0720 OUTPUT SPEED SENSOR

Description

INFOID:0000000006207687

The output speed sensor detects the revolution of the parking gear and emits a pulse signal. The pulse signal is transmitted to the TCM which converts it into vehicle speed.

DTC Logic

INFOID:0000000006207688

DTC DETECTION LOGIC

DTC	Trouble diagnosis name	DTC is detected if...	Possible cause
P0720	Output Speed Sensor Circuit	• The vehicle speed detected by the output speed sensor is 5 km/h (3 MPH) or less when the vehicle speed transmitted from the unified meter and A/C amp. to TCM is 20 km/h (12 MPH) or more. (Only when starts after the ignition switch is turned ON.) • The vehicle speed transmitted from the unified meter and A/C amp. to TCM does not decrease despite the 36 km/h (23 MPH) or more of deceleration in vehicle speed detected by the output speed sensor. when the vehicle speed detected by the output speed sensor is 36 km/h (23 MPH) or more and the vehicle speed transmitted from the unified meter and A/C amp. to TCM is 24 km/h (15 MPH) or more.	• Harness or connectors (Sensor circuit is open.) • Output speed sensor

DTC CONFIRMATION PROCEDURE

CAUTION:

- **Always drive vehicle at a safe speed.**
- **Be careful not to rev engine into the red zone on the tachometer.**

1.PRECONDITIONING

If “DTC CONFIRMATION PROCEDURE” is previously conducted, always turn ignition switch OFF and wait at least 10 seconds before performing the next test.

>> GO TO 2.

2.CHECK DTC DETECTION

With CONSULT-III

1. Start the engine.
2. Select “ESTM VSP SIG” in “Data Monitor” in “TRANSMISSION”.
3. Drive vehicle and maintain the following conditions for 60 seconds or more.

ESTM VSP SIG	: 40 km/h (25 MPH) or more

4. Perform “Self Diagnostic Results” in “TRANSMISSION”.

With GST

Follow the procedure “With CONSULT-III”.

Is “P0720” detected?

YES >> Go to TM-168, "Diagnosis Procedure".
NO >> INSPECTION END

Diagnosis Procedure

INFOID:0000000006207689

1.CHECK INTERMITTENT INCIDENT

Refer to GI-43, "Intermittent Incident".

Is the inspection result normal?

YES >> GO TO 2.
NO >> Repair or replace damaged parts.

2.REPLACE OUTPUT SPEED SENSOR AND CHECK DTC

1. Replace output speed sensor. Refer to TM-296, "2WD : Exploded View" (2WD) or TM-316, "Exploded View" (AWD).
2. Perform “DTC CONFIRMATION PROCEDURE”. Refer to TM-167, "DTC Logic".

Is the inspection result normal?

YES >> INSPECTION END
NO >> Replace control valve & TCM. Refer to TM-283, "Exploded View"..

P0725 ENGINE SPEED

Description

INFOID:0000000006207690

The engine speed signal is transmitted from the ECM to the TCM via CAN communication line.

DTC Logic

INFOID:0000000006207691

DTC DETECTION LOGIC

DTC	Trouble diagnosis name	DTC is detected if...	Possible cause
P0725	Engine Speed Input Circuit	• TCM does not receive the CAN communication signal from the ECM. • The engine speed is more less 150 rpm even if the vehicle speed is more than 10 km/h (7 MPH).	Harness or connectors (ECM to TCM circuit is open or shorted.)

DTC CONFIRMATION PROCEDURE

CAUTION:

Always drive vehicle at a safe speed.

1.PRECONDITIONING

If “DTC CONFIRMATION PROCEDURE” is previously conducted, always turn ignition switch OFF and wait at least 10 seconds before performing the next test.

>> GO TO 2.

2.CHECK DTC DETECTION

With CONSULT-III

1. Start the engine.
2. Select “SLCT LVR POSI” and “VHCL/S SE-A/T” in “Data Monitor” in “TRANSMISSION”.
3. Drive vehicle and maintain the following conditions for 5 seconds or more.

SLCT LVR POSI	: D
VHCL/S SE-A/T	: More than 10 km/h (7 MPH)

4. Perform “Self Diagnostic Results” in “TRANSMISSION”.

Is “P0725” detected?

YES >> Go to TM-169, "Diagnosis Procedure".
NO >> INSPECTION END

Diagnosis Procedure

INFOID:0000000006207692

1.CHECK DTC OF ECM

With CONSULT-III

1. Turn ignition switch ON.
2. Perform “Self Diagnostic Results” in “ENGINE”.

Is any DTC detected?

YES >> Check DTC detected item. Refer to EC-1160, "DTC Index" (VQ25HR), EC-583, "DTC Index" (VQ37VHR).
NO >> GO TO 2.

2.CHECK DTC OF TCM

With CONSULT-III

Perform “Self Diagnostic Results” in “TRANSMISSION”.

Is any DTC other than “P0725” detected?

YES >> Check DTC detected item. Refer to TM-251, "DTC Index".

NO >> GO TO 3.

3.CHECK INTERMITTENT INCIDENT

Refer to GI-43, "Intermittent Incident".

Is the inspection result normal?

YES >> Replace control valve & TCM. Refer to TM-283, "Exploded View".
NO >> Repair or replace damaged parts.

P0729 6GR INCORRECT RATIO

Description

INFOID:0000000006207693

This malfunction is detected when the A/T does not shift into 6GR position as instructed by TCM. This is not only caused by electrical malfunction (circuits open or shorted) but by mechanical malfunction such as control valve sticking, improper solenoid valve operation, etc.

DTC Logic

INFOID:0000000006207694

DTC DETECTION LOGIC

DTC	Trouble diagnosis name	DTC is detected if...	Possible cause
P0729	Gear 6 Incorrect Ratio	The gear ratio is: • VQ25HR - 0.923 or more - 0.819 or less • VQ37VHR - 0.914 or more - 0.810 or less	• Input clutch solenoid valve • Direct clutch solenoid valve • High and low reverse clutch solenoid valve • Front brake solenoid valve • Low brake solenoid valve • 2346 brake solenoid valve • Anti-interlock solenoid valve • Each clutch and brake • Output speed sensor • Input speed sensor 1, 2 • Hydraulic control circuit

DTC CONFIRMATION PROCEDURE

CAUTION:

- **"TM-172, "Diagnosis Procedure"" must be performed before starting "DTC CONFIRMATION PROCEDURE".**
- **Never perform "DTC CONFIRMATION PROCEDURE" before completing the repair, which may cause secondary malfunction.**
- **Always drive vehicle at a safe speed.**

1. PRECONDITIONING

If "DTC CONFIRMATION PROCEDURE" is previously conducted, always turn ignition switch OFF and wait at least 10 seconds before performing the next test.

>> GO TO 2.

2. CHECK ATF TEMPERATURE

With CONSULT-III

1. Start the engine.
2. Select "ATF TEMP 1" in "Data Monitor" in "TRANSMISSION".
3. Check ATF temperature is in the following range.

ATF TEMP 1 : 20°C (68°F) – 140°C (284°F)

With GST

1. Start the engine.
2. Drive vehicle for approximately 5 minutes in urban areas.

Is ATF temperature within specified range?

YES >> GO TO 3.
NO >> Drive vehicle to warm ATF or stop engine to cool ATF.

3. CHECK SYMPTOM (PART 1)

With CONSULT-III

1. Select "6TH GR FNCTN P0729" in "DTC & SRT confirmation" in "TRANSMISSION".
2. Drive vehicle with manual mode and maintain the following conditions.

GEAR	: 6th
ACCELE POSI	: 0.7/8 or more
VEHICLE SPEED	: 10 km/h (7 MPH) or more

3. Keep the current driving status for 2 seconds or more if CONSULT-III screen changes from “OUT OF CONDITION” to “TESTING”.
CAUTION:
When “TESTING” is not indicated on CONSULT-III for a long time, check “Self Diagnostic Results” in “TRANSMISSION”. When a DTC other than “P0729” is detected, check the DTC. Refer to TM-151, "CONSULT-III Function (TRANSMISSION)".

With GST
1. Drive vehicle and maintain the following conditions for 2 seconds or more.

Selector lever	: “M” position
Gear position	: 6th
Accelerator pedal opening	: 0.7/8 or more
Vehicle speed	: 10 km/h (7 MPH) or more

2. Check DTC.

Is “OUT OF CONDITION”, “STOP VEHICLE” or “COMPLETED RESULT NG” displayed? / Is “P0729” detected?

YES-1 >> “OUT OF CONDITION”: Perform “Step 3” again.
YES-2 >> “STOP VEHICLE”: GO TO 4.
YES-3 >> “COMPLETED RESULT NG”: Go to TM-172, "Diagnosis Procedure".
YES-4 >> “P0729” is detected: Go to TM-172, "Diagnosis Procedure".
NO >> GO TO 4.

4.CHECK SYMPTOM (PART 2)

With CONSULT-III
1. Stop vehicle.
2. Drive vehicle in “D” position allowing it to shift from 1GR to 7GR and check shift timing and shift shock.

>> INSPECTION END

Diagnosis Procedure

INFOID:0000000006207695

1.CHECK INTERMITTENT INCIDENT

Refer to GI-43, "Intermittent Incident".

Is the inspection result normal?

YES >> GO TO 2.
NO >> Repair or replace damaged parts.

2.DETECT MALFUNCTIONING ITEM

Disassemble the A/T assembly to check component parts. Refer to TM-335, "Disassembly".
NOTE:
Check the component parts, referring to “Possible cause” in “DTC DETECTION LOGIC”. Refer to TM-171, "DTC Logic".

Is the inspection result normal?

YES >> Replace control valve & TCM. Refer to TM-283, "Exploded View".
NO >> Repair or replace damaged parts.

P0730 INCORRECT GEAR RATIO

Description

INFOID:0000000006207696

- TCM detects a high-rpm state of the under drive sun gear.
- The number of revolutions of the under drive sun gear is calculated with the input speed sensor 1 and 2.

DTC Logic

INFOID:0000000006207697

DTC DETECTION LOGIC

DTC	Trouble diagnosis name	DTC is detected if...	Possible cause
P0730	Incorrect Gear Ratio	The revolution of under drive sun gear is 8,000 rpm or more. **NOTE:** Not detected when in “P” or “N” position and during a shift to “P” or “N” position.	• 2346 brake solenoid valve • Front brake solenoid valve • Input speed sensor 1, 2

DTC CONFIRMATION PROCEDURE

CAUTION:

- **“TM-173, "Diagnosis Procedure"” must be performed before starting “DTC CONFIRMATION PROCEDURE”.**
- **Never perform “DTC CONFIRMATION PROCEDURE” before completing the repair, which may cause secondary malfunction.**
- **Always drive vehicle at a safe speed.**

1. PRECONDITIONING

If “DTC CONFIRMATION PROCEDURE” is previously conducted, always turn ignition switch OFF and wait at least 10 seconds before performing the next test.

>> GO TO 2.

2. CHECK DTC DETECTION

With CONSULT-III

1. Start the engine.
2. Select “Self Diagnostic Results” in “ENGINE”.
3. Drive vehicle under the similar conditions to (1st trip) Freeze Frame Data for 10 minutes. Refer to the table below.
   Hold the accelerator pedal as steady as possible.

ENGINE SPEED	Same value as the Freeze Frame Data.
VEHICLE SPEED	Same value as the Freeze Frame Data.
B/FUEL SCHDL	Same value as the Freeze Frame Data.

4. Check 1st trip DTC.

With GST

Follow the procedure “With CONSULT-III”.

Is 1st trip DTC detected?

YES >> Go to TM-173, "Diagnosis Procedure".
NO >> INSPECTION END

Diagnosis Procedure

INFOID:0000000006207698

1. CHECK INTERMITTENT INCIDENT

Refer to GI-43, "Intermittent Incident".

Is the inspection result normal?

YES >> GO TO 2.

NO >> Repair or replace damaged parts.

2. DETECT MALFUNCTIONING ITEM

Disassemble the A/T assembly to check component parts. Refer to TM-335, "Disassembly".

NOTE:

Check the component parts, referring to “Possible cause” in “DTC DETECTION LOGIC”. Refer to TM-173, "DTC Logic".

Is the inspection result normal?

YES >> Replace control valve & TCM. Refer to TM-283, "Exploded View".

NO >> Repair or replace damaged parts.

P0731 1GR INCORRECT RATIO

Description

INFOID:0000000006207699

This malfunction is detected when the A/T does not shift into 1GR position as instructed by TCM. This is not only caused by electrical malfunction (circuits open or shorted) but by mechanical malfunction such as control valve sticking, improper solenoid valve operation, etc.

DTC Logic

INFOID:0000000006207700

DTC DETECTION LOGIC

DTC	Trouble diagnosis name	DTC is detected if...	Possible cause
P0731	Gear 1 Incorrect Ratio	The gear ratio is: • VQ25HR - 5.069 or more - 4.496 or less • VQ37VHR - 5.219 or more - 4.629 or less	• Input clutch solenoid valve • Direct clutch solenoid valve • High and low reverse clutch solenoid valve • Front brake solenoid valve • Low brake solenoid valve • 2346 brake solenoid valve • Anti-interlock solenoid valve • Each clutch and brake • Output speed sensor • Input speed sensor 1, 2 • Hydraulic control circuit

DTC CONFIRMATION PROCEDURE

CAUTION:

- **"TM-176, "Diagnosis Procedure"" must be performed before starting "DTC CONFIRMATION PROCEDURE".**
- **Never perform "DTC CONFIRMATION PROCEDURE" before completing the repair, which may cause secondary malfunction.**
- **Always drive vehicle at a safe speed.**

1. PRECONDITIONING

If "DTC CONFIRMATION PROCEDURE" is previously conducted, always turn ignition switch OFF and wait at least 10 seconds before performing the next test.

>> GO TO 2.

2. CHECK ATF TEMPERATURE

With CONSULT-III

1. Start the engine.
2. Select "ATF TEMP 1" in "Data Monitor" in "TRANSMISSION".
3. Check ATF temperature is in the following range.

ATF TEMP 1 : 20°C (68°F) – 140°C (284°F)

With GST

1. Start the engine.
2. Drive vehicle for approximately 5 minutes in urban areas.

Is ATF temperature within specified range?

YES >> GO TO 3.
NO >> Drive vehicle to warm ATF or stop engine to cool ATF.

3. CHECK SYMPTOM (PART 1)

With CONSULT-III

1. Select "1ST GR FNCTN P0731" in "DTC & SRT confirmation" in "TRANSMISSION".
2. Drive vehicle with manual mode and maintain the following conditions.

GEAR	: 1st
ACCELE POSI	: 0.7/8 or more
VEHICLE SPEED	: 10 km/h (7 MPH) or more

3. Keep the current driving status for 2 seconds or more if CONSULT-III screen changes from “OUT OF CONDITION” to “TESTING”.
CAUTION:
When “TESTING” is not indicated on CONSULT-III for a long time, check “Self Diagnostic Results” in “TRANSMISSION”. When a DTC other than “P0731” is detected, check the DTC. Refer to TM-151, "CONSULT-III Function (TRANSMISSION)".

With GST
1. Drive vehicle and maintain the following conditions for 2 seconds or more.

Selector lever	: “M” position
Gear position	: 1st
Accelerator pedal opening	: 0.7/8 or more
Vehicle speed	: 10 km/h (7 MPH) or more

2. Check DTC.

Is “OUT OF CONDITION”, “STOP VEHICLE” or “COMPLETED RESULT NG” displayed? / Is “P0731” detected?

YES-1 >> “OUT OF CONDITION”: Perform “Step 3” again.
YES-2 >> “STOP VEHICLE”: GO TO 4.
YES-3 >> “COMPLETED RESULT NG”: Go to TM-176, "Diagnosis Procedure".
YES-4 >> “P0731” is detected: Go to TM-176, "Diagnosis Procedure".
NO >> GO TO 4.

4.CHECK SYMPTOM (PART 2)

With CONSULT-III
1. Stop vehicle.
2. Drive vehicle in “D” position allowing it to shift from 1GR to 7GR and check shift timing and shift shock.

>> INSPECTION END

Diagnosis Procedure

INFOID:0000000006207701

1.CHECK INTERMITTENT INCIDENT

Refer to GI-43, "Intermittent Incident".

Is the inspection result normal?

YES >> GO TO 2.
NO >> Repair or replace damaged parts.

2.DETECT MALFUNCTIONING ITEM

Disassemble the A/T assembly to check component parts. Refer to TM-335, "Disassembly".
NOTE:
Check the component parts, referring to “Possible cause” in “DTC DETECTION LOGIC”. Refer to TM-175, "DTC Logic".

Is the inspection result normal?

YES >> Replace control valve & TCM. Refer to TM-283, "Exploded View".
NO >> Repair or replace damaged parts.

P0732 2GR INCORRECT RATIO

Description

INFOID:0000000006207702

This malfunction is detected when the A/T does not shift into 2GR position as instructed by TCM. This is not only caused by electrical malfunction (circuits open or shorted) but by mechanical malfunction such as control valve sticking, improper solenoid valve operation, etc.

DTC Logic

INFOID:0000000006207703

DTC DETECTION LOGIC

DTC	Trouble diagnosis name	DTC is detected if...	Possible cause
P0732	Gear 2 Incorrect Ratio	The gear ratio is: • VQ25HR - 3.289 or more - 2.917 or less • VQ37VHR - 3.386 or more - 3.002 or less	• Input clutch solenoid valve • Direct clutch solenoid valve • High and low reverse clutch solenoid valve • Front brake solenoid valve • Low brake solenoid valve • 2346 brake solenoid valve • Anti-interlock solenoid valve • Each clutch and brake • Output speed sensor • Input speed sensor 1, 2 • Hydraulic control circuit

DTC CONFIRMATION PROCEDURE

CAUTION:

- **"TM-178, "Diagnosis Procedure"" must be performed before starting "DTC CONFIRMATION PROCEDURE".**
- **Never perform "DTC CONFIRMATION PROCEDURE" before completing the repair, which may cause secondary malfunction.**
- **Always drive vehicle at a safe speed.**

1. PRECONDITIONING

If "DTC CONFIRMATION PROCEDURE" is previously conducted, always turn ignition switch OFF and wait at least 10 seconds before performing the next test.

>> GO TO 2.

2. CHECK ATF TEMPERATURE

With CONSULT-III

1. Start the engine.
2. Select "ATF TEMP 1" in "Data Monitor" in "TRANSMISSION".
3. Check ATF temperature is in the following range.

ATF TEMP 1 : 20°C (68°F) – 140°C (284°F)

With GST

1. Start the engine.
2. Drive vehicle for approximately 5 minutes in urban areas.

Is ATF temperature within specified range?

YES >> GO TO 3.
NO >> Drive vehicle to warm ATF or stop engine to cool ATF.

3. CHECK SYMPTOM (PART 1)

With CONSULT-III

1. Select "2ND GR FNCTN P0732" in "DTC & SRT confirmation" in "TRANSMISSION".
2. Drive vehicle with manual mode and maintain the following conditions.

GEAR	: 2nd
ACCELE POSI	: 0.7/8 or more
VEHICLE SPEED	: 10 km/h (7 MPH) or more

3. Keep the current driving status for 2 seconds or more if CONSULT-III screen changes from “OUT OF CONDITION” to “TESTING”.
CAUTION:
When “TESTING” is not indicated on CONSULT-III for a long time, check “Self Diagnostic Results” in “TRANSMISSION”. When a DTC other than “P0732” is detected, check the DTC. Refer to TM-151, "CONSULT-III Function (TRANSMISSION)".

With GST
1. Drive vehicle and maintain the following conditions for 2 seconds or more.

Selector lever	: “M” position
Gear position	: 2nd
Accelerator pedal opening	: 0.7/8 or more
Vehicle speed	: 10 km/h (7 MPH) or more

2. Check DTC.

Is “OUT OF CONDITION”, “STOP VEHICLE” or “COMPLETED RESULT NG” displayed? / Is “P0732” detected?

YES-1 >> “OUT OF CONDITION”: Perform “Step 3” again.
YES-2 >> “STOP VEHICLE”: GO TO 4.
YES-3 >> “COMPLETED RESULT NG”: Go to TM-178, "Diagnosis Procedure".
YES-4 >> “P0732” is detected: Go to TM-178, "Diagnosis Procedure".
NO >> GO TO 4.

4.CHECK SYMPTOM (PART 2)

With CONSULT-III
1. Stop vehicle.
2. Drive vehicle in “D” position allowing it to shift from 1GR to 7GR and check shift timing and shift shock.

>> INSPECTION END

Diagnosis Procedure

INFOID:0000000006207704

1.CHECK INTERMITTENT INCIDENT

Refer to GI-43, "Intermittent Incident".

Is the inspection result normal?

YES >> GO TO 2.
NO >> Repair or replace damaged parts.

2.DETECT MALFUNCTIONING ITEM

Disassemble the A/T assembly to check component parts. Refer to TM-335, "Disassembly".
NOTE:
Check the component parts, referring to “Possible cause” in “DTC DETECTION LOGIC”. Refer to TM-177, "DTC Logic".

Is the inspection result normal?

YES >> Replace control valve & TCM. Refer to TM-283, "Exploded View".
NO >> Repair or replace damaged parts.

P0733 3GR INCORRECT RATIO

Description

INFOID:0000000006207705

This malfunction is detected when the A/T does not shift into 3GR position as instructed by TCM. This is not only caused by electrical malfunction (circuits open or shorted) but by mechanical malfunction such as control valve sticking, improper solenoid valve operation, etc.

DTC Logic

INFOID:0000000006207706

DTC DETECTION LOGIC

DTC	Trouble diagnosis name	DTC is detected if...	Possible cause
P0733	Gear 3 Incorrect Ratio	The gear ratio is: • VQ25HR - 2.103 or more - 1.865 or less • VQ37VHR - 2.166 or more - 1.920 or less	• Input clutch solenoid valve • Direct clutch solenoid valve • High and low reverse clutch solenoid valve • Front brake solenoid valve • Low brake solenoid valve • 2346 brake solenoid valve • Anti-interlock solenoid valve • Each clutch and brake • Output speed sensor • Input speed sensor 1, 2 • Hydraulic control circuit

DTC CONFIRMATION PROCEDURE

CAUTION:

- **"TM-180, "Diagnosis Procedure"" must be performed before starting "DTC CONFIRMATION PROCEDURE".**
- **Never perform "DTC CONFIRMATION PROCEDURE" before completing the repair, which may cause secondary malfunction.**
- **Always drive vehicle at a safe speed.**

1. PRECONDITIONING

If "DTC CONFIRMATION PROCEDURE" is previously conducted, always turn ignition switch OFF and wait at least 10 seconds before performing the next test.

>> GO TO 2.

2. CHECK ATF TEMPERATURE

With CONSULT-III

1. Start the engine.
2. Select "ATF TEMP 1" in "Data Monitor" in T"RANSMISSION".
3. Check ATF temperature is in the following range.

ATF TEMP 1 : 20°C (68°F) – 140°C (284°F)

With GST

1. Start the engine.
2. Drive vehicle for approximately 5 minutes in urban areas.

Is ATF temperature within specified range?

YES >> GO TO 3.
NO >> Drive vehicle to warm ATF or stop engine to cool ATF.

3. CHECK SYMPTOM (PART 1)

With CONSULT-III

1. Select "3RD GR FNCTN P0733" in "DTC & SRT confirmation" in T"RANSMISSION".
2. Drive vehicle with manual mode and maintain the following conditions.

GEAR	: 3rd
ACCELE POSI	: 0.7/8 or more
VEHICLE SPEED	: 10 km/h (7 MPH) or more

3. Keep the current driving status for 2 seconds or more if CONSULT-III screen changes from “OUT OF CONDITION” to “TESTING”.
CAUTION:
When “TESTING” is not indicated on CONSULT-III for a long time, check “Self Diagnostic Results” in “TRANSMISSION”. When a DTC other than “P0733” is detected, check the DTC. Refer to TM-151, "CONSULT-III Function (TRANSMISSION)".

With GST
1. Drive vehicle and maintain the following conditions for 2 seconds or more.

Selector lever	: “M” position
Gear position	: 3rd
Accelerator pedal opening	: 0.7/8 or more
Vehicle speed	: 10 km/h (7 MPH) or more

2. Check DTC.

Is “OUT OF CONDITION”, “STOP VEHICLE” or “COMPLETED RESULT NG” displayed? / Is “P0733” detected?

YES-1 >> “OUT OF CONDITION”: Perform “Step 3” again.
YES-2 >> “STOP VEHICLE”: GO TO 4.
YES-3 >> “COMPLETED RESULT NG”: Go to TM-180, "Diagnosis Procedure".
YES-4 >> “P0733” is detected: Go to TM-180, "Diagnosis Procedure".
NO >> GO TO 4.

4.CHECK SYMPTOM (PART 2)

With CONSULT-III
1. Stop vehicle.
2. Drive vehicle in “D” position allowing it to shift from 1GR to 7GR and check shift timing and shift shock.

>> INSPECTION END

Diagnosis Procedure

INFOID:0000000006207707

1.CHECK INTERMITTENT INCIDENT

Refer to GI-43, "Intermittent Incident".

Is the inspection result normal?

YES >> GO TO 2.
NO >> Repair or replace damaged parts.

2.DETECT MALFUNCTIONING ITEM

Disassemble the A/T assembly to check component parts. Refer to TM-335, "Disassembly".
NOTE:
Check the component parts, referring to “Possible cause” in “DTC DETECTION LOGIC”. Refer to TM-179, "DTC Logic".

Is the inspection result normal?

YES >> Replace control valve & TCM. Refer to TM-283, "Exploded View".
NO >> Repair or replace damaged parts.

P0734 4GR INCORRECT RATIO

Description

INFOID:0000000006207708

This malfunction is detected when the A/T does not shift into 4GR position as instructed by TCM. This is not only caused by electrical malfunction (circuits open or shorted) but by mechanical malfunction such as control valve sticking, improper solenoid valve operation, etc.

DTC Logic

INFOID:0000000006207709

DTC DETECTION LOGIC

DTC	Trouble diagnosis name	DTC is detected if...	Possible cause
P0734	Gear 4 Incorrect Ratio	The gear ratio is: • VQ25HR - 1.453 or more - 1.289 or less • VQ37VHR - 1.497 or more - 1.327 or less	• Input clutch solenoid valve • Direct clutch solenoid valve • High and low reverse clutch solenoid valve • Front brake solenoid valve • Low brake solenoid valve • 2346 brake solenoid valve • Anti-interlock solenoid valve • Each clutch and brake • Output speed sensor • Input speed sensor 1, 2 • Hydraulic control circuit

DTC CONFIRMATION PROCEDURE

CAUTION:

- **"TM-182, "Diagnosis Procedure"" must be performed before starting "DTC CONFIRMATION PROCEDURE".**
- **Never perform "DTC CONFIRMATION PROCEDURE" before completing the repair, which may cause secondary malfunction.**
- **Always drive vehicle at a safe speed.**

1. PRECONDITIONING

If "DTC CONFIRMATION PROCEDURE" is previously conducted, always turn ignition switch OFF and wait at least 10 seconds before performing the next test.

>> GO TO 2.

2. CHECK ATF TEMPERATURE

With CONSULT-III

1. Start the engine.
2. Select "ATF TEMP 1" in "Data Monitor" in "TRANSMISSION".
3. Check ATF temperature is in the following range.

ATF TEMP 1 : 20°C (68°F) – 140°C (284°F)

With GST

1. Start the engine.
2. Drive vehicle for approximately 5 minutes in urban areas.

Is ATF temperature within specified range?

YES >> GO TO 3.
NO >> Drive vehicle to warm ATF or stop engine to cool ATF.

3. CHECK SYMPTOM (PART 1)

With CONSULT-III

1. Select "4TH GR FNCTN P0734" in "DTC & SRT confirmation" in "TRANSMISSION".
2. Drive vehicle with manual mode and maintain the following conditions.

GEAR	: 4th
ACCELE POSI	: 0.7/8 or more
VEHICLE SPEED	: 10 km/h (7 MPH) or more

3. Keep the current driving status for 2 seconds or more if CONSULT-III screen changes from “OUT OF CONDITION” to “TESTING”.
CAUTION:
When “TESTING” is not indicated on CONSULT-III for a long time, check “Self Diagnostic Results” in “TRANSMISSION”. When a DTC other than “P0734” is detected, check the DTC. Refer to TM-151, "CONSULT-III Function (TRANSMISSION)".

With GST
1. Drive vehicle and maintain the following conditions for 2 seconds or more.

Selector lever	: “M” position
Gear position	: 4th
Accelerator pedal opening	: 0.7/8 or more
Vehicle speed	: 10 km/h (7 MPH) or more

2. Check DTC.

Is “OUT OF CONDITION”, “STOP VEHICLE” or “COMPLETED RESULT NG” displayed? / Is “P0734” detected?

YES-1 >> “OUT OF CONDITION”: Perform “Step 3” again.
YES-2 >> “STOP VEHICLE”: GO TO 4.
YES-3 >> “COMPLETED RESULT NG”: Go to TM-182, "Diagnosis Procedure".
YES-4 >> “P0734” is detected: Go to TM-182, "Diagnosis Procedure".
NO >> GO TO 4.

4.CHECK SYMPTOM (PART 2)

With CONSULT-III
1. Stop vehicle.
2. Drive vehicle in “D” position allowing it to shift from 1GR to 7GR and check shift timing and shift shock.

>> INSPECTION END

Diagnosis Procedure

INFOID:0000000006207710

1.CHECK INTERMITTENT INCIDENT

Refer to GI-43, "Intermittent Incident".

Is the inspection result normal?

YES >> GO TO 2.
NO >> Repair or replace damaged parts.

2.DETECT MALFUNCTIONING ITEM

Disassemble the A/T assembly to check component parts. Refer to TM-335, "Disassembly".
NOTE:
Check the component parts, referring to “Possible cause” in “DTC DETECTION LOGIC”. Refer to TM-181, "DTC Logic".

Is the inspection result normal?

YES >> Replace control valve & TCM. Refer to TM-283, "Exploded View".
NO >> Repair or replace damaged parts.

P0735 5GR INCORRECT RATIO

Description

INFOID:0000000006207711

This malfunction is detected when the A/T does not shift into 5GR position as instructed by TCM. This is not only caused by electrical malfunction (circuits open or shorted) but by mechanical malfunction such as control valve sticking, improper solenoid valve operation, etc.

DTC Logic

INFOID:0000000006207712

DTC DETECTION LOGIC

DTC	Trouble diagnosis name	DTC is detected if...	Possible cause
P0735	Gear 5 Incorrect Ratio	The gear ratio is: • 1.060 or more • 0.940 or less	• Input clutch solenoid valve • Direct clutch solenoid valve • High and low reverse clutch solenoid valve • Front brake solenoid valve • Low brake solenoid valve • 2346 brake solenoid valve • Anti-interlock solenoid valve • Each clutch and brake • Output speed sensor • Input speed sensor 1, 2 • Hydraulic control circuit

DTC CONFIRMATION PROCEDURE

CAUTION:

- **"TM-184, "Diagnosis Procedure"" must be performed before starting "DTC CONFIRMATION PROCEDURE".**
- **Never perform "DTC CONFIRMATION PROCEDURE" before completing the repair, which may cause secondary malfunction.**
- **Always drive vehicle at a safe speed.**

1. PRECONDITIONING

If "DTC CONFIRMATION PROCEDURE" is previously conducted, always turn ignition switch OFF and wait at least 10 seconds before performing the next test.

>> GO TO 2.

2. CHECK ATF TEMPERATURE

With CONSULT-III

1. Start the engine.
2. Select "ATF TEMP 1" in "Data Monitor" in "TRANSMISSION".
3. Check ATF temperature is in the following range.

ATF TEMP 1 : 20°C (68°F) – 140°C (284°F)

With GST

1. Start the engine.
2. Drive vehicle for approximately 5 minutes in urban areas.

Is ATF temperature within specified range?

YES >> GO TO 3.
NO >> Drive vehicle to warm ATF or stop engine to cool ATF.

3. CHECK SYMPTOM (PART 1)

With CONSULT-III

1. Select "5TH GR FNCTN P0735" in "DTC & SRT confirmation" in "TRANSMISSION".
2. Drive vehicle with manual mode and maintain the following conditions.

GEAR	: 5th
ACCELE POSI	: 0.7/8 or more
VEHICLE SPEED	: 10 km/h (7 MPH) or more

3. Keep the current driving status for 2 seconds or more if CONSULT-III screen changes from “OUT OF CONDITION” to “TESTING”.
CAUTION:
When “TESTING” is not indicated on CONSULT-III for a long time, check “Self Diagnostic Results” in “TRANSMISSION”. When a DTC other than “P0735” is detected, check the DTC. Refer to TM-151, "CONSULT-III Function (TRANSMISSION)".

With GST
1. Drive vehicle and maintain the following conditions for 2 seconds or more.

Selector lever	: “M” position
Gear position	: 5th
Accelerator pedal opening	: 0.7/8 or more
Vehicle speed	: 10 km/h (7 MPH) or more

2. Check DTC.

Is “OUT OF CONDITION”, “STOP VEHICLE” or “COMPLETED RESULT NG” displayed? / Is “P0735” detected?

YES-1 >> “OUT OF CONDITION”: Perform “Step 3” again.
YES-2 >> “STOP VEHICLE”: GO TO 4.
YES-3 >> “COMPLETED RESULT NG”: Go to TM-184, "Diagnosis Procedure".
YES-4 >> “P0735” is detected: Go to TM-184, "Diagnosis Procedure".
NO >> GO TO 4.

4.CHECK SYMPTOM (PART 2)

With CONSULT-III
1. Stop vehicle.
2. Drive vehicle in “D” position allowing it to shift from 1GR to 7GR and check shift timing and shift shock.

>> INSPECTION END

Diagnosis Procedure

INFOID:0000000006207713

1.CHECK INTERMITTENT INCIDENT

Refer to GI-43, "Intermittent Incident".

Is the inspection result normal?

YES >> GO TO 2.
NO >> Repair or replace damaged parts.

2.DETECT MALFUNCTIONING ITEM

Disassemble the A/T assembly to check component parts. Refer to TM-335, "Disassembly".
NOTE:
Check the component parts, referring to “Possible cause” in “DTC DETECTION LOGIC”. Refer to TM-183, "DTC Logic".

Is the inspection result normal?

YES >> Replace control valve & TCM. Refer to TM-283, "Exploded View".
NO >> Repair or replace damaged parts.

P0740 TORQUE CONVERTER

Description

INFOID:0000000006207714

- The torque converter clutch solenoid valve is activated, with the gear in D2, D3, D4, D5, D6, D7, M2, M3, M4, M5, M6 and M7 by the TCM in response to signals transmitted from the output speed sensor and accelerator pedal position sensor (throttle position sensor). Torque converter clutch piston operation will then be controlled.
- Lock-up operation, however, is prohibited when A/T fluid temperature is too low.
- When the accelerator pedal is depressed (less than 1.0/8) in lock-up condition, the engine speed should not change abruptly. If there is a big jump in engine speed, there is no lock-up.

DTC Logic

INFOID:0000000006207715

DTC DETECTION LOGIC

DTC	Trouble diagnosis name	DTC is detected if...	Possible cause
P0740	Torque Converter Clutch Circuit/Open	The torque converter clutch solenoid valve monitor value is 0.4 A or less when the torque converter clutch solenoid valve command value is more than 0.75 A.	• Harness or connectors (Solenoid valve circuit is open or shorted.) • Torque converter clutch solenoid valve

DTC CONFIRMATION PROCEDURE

CAUTION:

Always drive vehicle at a safe speed.

1.PRECONDITIONING

If “DTC CONFIRMATION PROCEDURE” is previously conducted, always turn ignition switch OFF and wait at least 10 seconds before performing the next test.

>> GO TO 2.

2.CHECK DTC DETECTION

With CONSULT-III

1. Start the engine.
2. Select “BATTERY VOLT”, “MANU MODE SW”, “GEAR” and “VEHICLE SPEED” in “Data Monitor” in “TRANSMISSION”.
3. Drive vehicle and maintain the following conditions for 30 seconds or more.
   NOTE:
   Driving the vehicle uphill (increased engine load) will help maintain the driving conditions required for this test.

BATTERY VOLT	: 9 V or more
MANU MODE SW	: ON
GEAR	: 2nd
VEHICLE SPEED	: 40 km/h (25 MPH) or more

4. Perform “Self Diagnostic Results” in “TRANSMISSION”.

With GST

Follow the procedure “With CONSULT-III”.

Is “P0740” detected?

YES >> Go to TM-185, "Diagnosis Procedure".
NO >> INSPECTION END

Diagnosis Procedure

INFOID:0000000006207716

1.CHECK INTERMITTENT INCIDENT

Refer to GI-43, "Intermittent Incident".

Is the inspection result normal?

YES >> Replace control valve & TCM. Refer to TM-283, "Exploded View".
NO >> Repair or replace damaged parts.

P0744 TORQUE CONVERTER

Description

INFOID:0000000006207717

This malfunction is detected when the A/T does not lock-up. This is not only caused by electrical malfunction (circuits open or shorted) but also by mechanical malfunction such as control valve sticking, improper solenoid valve operation, etc.

DTC Logic

INFOID:0000000006207718

DTC DETECTION LOGIC

DTC	Trouble diagnosis name	DTC is detected if...	Possible cause
P0744	Torque Converter Clutch Circuit Intermittent	The lock-up is not performed in spite of within the lock-up area.	• Harness or connectors • Torque converter clutch solenoid valve • Torque converter • Input speed sensor 1, 2 • Hydraulic control circuit

DTC CONFIRMATION PROCEDURE

CAUTION:

Always drive vehicle at a safe speed.

1. PRECONDITIONING

If “DTC CONFIRMATION PROCEDURE” is previously conducted, always turn ignition switch OFF and wait at least 10 seconds before performing the next test.

>> GO TO 2.

2. CHECK DTC DETECTION

With CONSULT-III

1. Start the engine.
2. Select “MANU MODE SW”, “GEAR” and “VEHICLE SPEED” in “Data Monitor” in “TRANSMISSION”.
3. Drive vehicle and maintain the following conditions for 10 seconds or more.
   NOTE:
   Driving the vehicle uphill (increased engine load) will help maintain the driving conditions required for this test.

MANU MODE SW	: ON
GEAR	: 2nd
VEHICLE SPEED	: 40 km/h (25 MPH) or more

4. Perform “Self Diagnostic Results” in “TRANSMISSION”.

With GST

Follow the procedure “With CONSULT-III”.

Is “P0744” detected?

YES >> Go to TM-187, "Diagnosis Procedure".
NO >> INSPECTION END

Diagnosis Procedure

INFOID:0000000006207719

1. CHECK INTERMITTENT INCIDENT

Refer to GI-43, "Intermittent Incident".

Is the inspection result normal?

YES >> GO TO 2.
NO >> Repair or replace damaged parts.

2. DETECT MALFUNCTIONING ITEM

Disassemble the A/T assembly to check component parts. Refer to TM-335, "Disassembly".

NOTE:

Check the component parts, referring to “Possible cause” in “DTC DETECTION LOGIC”. Refer to TM-187, "DTC Logic".

Is the inspection result normal?

YES >> Replace control valve & TCM. Refer to TM-283, "Exploded View".
NO >> Repair or replace damaged parts.

P0745 PRESSURE CONTROL SOLENOID A

Description

INFOID:0000000006207720

The line pressure solenoid valve regulates the oil pump discharge pressure to suit the driving condition in response to a signal transmitted from the TCM.

DTC Logic

INFOID:0000000006207721

DTC DETECTION LOGIC

DTC	Trouble diagnosis name	DTC is detected if...	Possible cause
P0745	Pressure Control Solenoid A	The line pressure solenoid valve monitor value is 0.4 A or less when the line pressure solenoid valve command value is more than 0.75 A.	• Harness or connectors (Sensor valve circuit is open or shorted.) • Line pressure solenoid valve

DTC CONFIRMATION PROCEDURE

1.PRECONDITIONING

If “DTC CONFIRMATION PROCEDURE” is previously conducted, always turn ignition switch OFF and wait at least 10 seconds before performing the next test.

>> GO TO 2.

2.CHECK DTC DETECTION

With CONSULT-III

1. Start the engine.
2. Select “BATTERY VOLT” and “SLCT LVR POSI” in “Data Monitor” in “TRANSMISSION”.
3. Shift the selector lever to “N” position.
4. Maintain the following conditions for 5 seconds or more.

BATTERY VOLT	: 9 V or more
SLCT LVR POSI	: N/P

5. Perform “Self Diagnostic Results” in “TRANSMISSION”.

With GST

Follow the procedure “With CONSULT-III”.

Is “P0745” detected?

YES >> Go to TM-189, "Diagnosis Procedure".
NO >> INSPECTION END

Diagnosis Procedure

INFOID:0000000006207722

1.CHECK INTERMITTENT INCIDENT

Refer to GI-43, "Intermittent Incident".

Is the inspection result normal?

YES >> Replace control valve & TCM. Refer to TM-283, "Exploded View".
NO >> Repair or replace damaged parts.

P0750 SHIFT SOLENOID A

Description

INFOID:0000000006207723

- Anti-interlock solenoid valve prevents the simultaneous activation of the input clutch and the low brake.
- The anti-interlock solenoid valve is an ON/OFF type solenoid valve.

DTC Logic

INFOID:0000000006207724

DTC DETECTION LOGIC

DTC	Trouble diagnosis name	DTC is detected if...	Possible cause
P0750	Shift Solenoid A	• The anti-interlock solenoid valve monitor value is ON when the anti-interlock solenoid valve command value is OFF. • The anti-interlock solenoid valve monitor value is OFF when the anti-interlock solenoid valve command value is ON.	• Harness or connectors (Solenoid valve circuit is open or shorted.) • Anti-interlock solenoid valve

DTC CONFIRMATION PROCEDURE

CAUTION:

Always drive vehicle at a safe speed.

1.PRECONDITIONING

If “DTC CONFIRMATION PROCEDURE” is previously conducted, always turn ignition switch OFF and wait at least 10 seconds before performing the next test.

>> GO TO 2.

2.CHECK DTC DETECTION

With CONSULT-III

1. Start the engine.
2. Select “BATTERY VOLT”, “MANU MODE SW”, “GEAR” and “VHCL/S SE-A/T” in “Data Monitor” in “TRANSMISSION”.
3. Drive vehicle and maintain the following conditions for 5 seconds or more.

BATTERY VOLT	: 9 V or more
MANU MODE SW	: ON
GEAR	: 1st
VHCL/S SE-A/T	: 10 km/h (7 MPH) or more

4. Perform “Self Diagnostic Results” in “TRANSMISSION”.

With GST

Follow the procedure “With CONSULT-III”.

Is “P0750” detected?

YES >> Go to TM-190, "Diagnosis Procedure".
NO >> INSPECTION END

Diagnosis Procedure

INFOID:0000000006207725

1.CHECK INTERMITTENT INCIDENT

Refer to GI-43, "Intermittent Incident".

Is the inspection result normal?

YES >> Replace control valve & TCM. Refer to TM-283, "Exploded View".
NO >> Repair or replace damaged parts.

P0775 PRESSURE CONTROL SOLENOID B

Description

INFOID:0000000006207726

- The Input clutch solenoid valve is controlled by the TCM in response to signals transmitted from the transmission range switch, output speed sensor and accelerator pedal position sensor (throttle position sensor). Gears will then be shifted to the optimum position.
- The Input clutch solenoid valve controls the input clutch control valve in response to a signal transmitted from the TCM.

DTC Logic

INFOID:0000000006207727

DTC DETECTION LOGIC

DTC	Trouble diagnosis name	DTC is detected if...	Possible cause
P0775	Pressure Control Solenoid B	The input clutch solenoid valve monitor value is 0.4 A or less when the input clutch solenoid valve command value is more than 0.75 A.	• Harness or connectors (Solenoid valve circuit is open or shorted.) • Input clutch solenoid valve

DTC CONFIRMATION PROCEDURE

CAUTION:

Always drive vehicle at a safe speed.

1. PRECONDITIONING

If “DTC CONFIRMATION PROCEDURE” is previously conducted, always turn ignition switch OFF and wait at least 10 seconds before performing the next test.

>> GO TO 2.

2. CHECK DTC DETECTION

With CONSULT-III

1. Start the engine.
2. Select “BATTERY VOLT”, “MANU MODE SW”, “GEAR” and “VHCL/S SE-A/T” in “Data Monitor” in “TRANSMISSION”.
3. Drive vehicle and maintain the following conditions for 5 seconds or more.

BATTERY VOLT	: 9 V or more
MANU MODE SW	: ON
GEAR	: 1st
VHCL/S SE-A/T	: 10 km/h (7 MPH) or more

4. Perform “Self Diagnostic Results” in “TRANSMISSION”.

With GST

Follow the procedure “With CONSULT-III”.

Is “P0775” detected?

YES >> Go to TM-191, "Diagnosis Procedure".
NO >> INSPECTION END

Diagnosis Procedure

INFOID:0000000006207728

1. CHECK INTERMITTENT INCIDENT

Refer to GI-43, "Intermittent Incident".

Is the inspection result normal?

YES >> Replace control valve & TCM. Refer to TM-283, "Exploded View".
NO >> Repair or replace damaged parts.

P0780 SHIFT

Description

INFOID:0000000006207729

The TCM detects the malfunction of low brake solenoid valve. This is not only caused by electrical malfunction (circuits open or shorted) but also by mechanical malfunction such as control valve sticking, improper solenoid valve operation, etc.

DTC Logic

INFOID:0000000006207730

DTC DETECTION LOGIC

DTC	Trouble diagnosis name	DTC is detected if...	Possible cause
P0780	Shift Error	• TCM judges that the gear ratio is not switched to that of 4GR (VQ25HR: 1.371, VQ37VHR: 1.412) while shifting from 3GR to 4GR in “D” position. • TCM judges that the engine speed is more than the specified one while shifting from 5GR to 6GR or from 6GR to 7GR in “D” position.	• Anti-interlock solenoid valve • Low brake solenoid valve • Hydraulic control circuit

DTC CONFIRMATION PROCEDURE

CAUTION:

- **“TM-192, "Diagnosis Procedure"” must be performed before starting “DTC CONFIRMATION PROCEDURE”.**
- **Never perform “DTC CONFIRMATION PROCEDURE” before completing the repair, which may cause secondary malfunction.**
- **Always drive vehicle at a safe speed.**

1. PRECONDITIONING

If “DTC CONFIRMATION PROCEDURE” is previously conducted, always turn ignition switch OFF and wait at least 10 seconds before performing the next test.

>> GO TO 2.

2. CHECK DTC DETECTION

With CONSULT-III

1. Start the engine.
2. Select “SLCT LVR POSI”, “ACCELE POSI” and “GEAR” in “Data Monitor” in “TRANSMISSION”.
3. Drive vehicle and maintain the following conditions.

SLCT LVR POSI	: D
ACCELE POSI	: More than 1.0/8
GEAR	: 3rd → 4th or 5th → 6th → 7th

4. Perform “Self Diagnostic Results” in “TRANSMISSION”.

With GST

Follow the procedure “With CONSULT-III”.

Is “P0780” detected?

YES >> Go to TM-192, "Diagnosis Procedure".
NO >> INSPECTION END

Diagnosis Procedure

INFOID:0000000006207731

1. CHECK INTERMITTENT INCIDENT

Refer to GI-43, "Intermittent Incident".

Is the inspection result normal?

YES >> GO TO 2.
NO >> Repair or replace damaged parts.

2. DETECT MALFUNCTIONING ITEM

Disassemble the A/T assembly to check component parts. Refer to TM-335, "Disassembly".

NOTE:

Check the component parts, referring to “Possible cause” in “DTC DETECTION LOGIC”. Refer to TM-192, "DTC Logic".

Is the inspection result normal?

YES >> Replace control valve & TCM. Refer to TM-283, "Exploded View".
NO >> Repair or replace damaged parts.

P0795 PRESSURE CONTROL SOLENOID C

Description

INFOID:0000000006207732

- The front brake solenoid valve is controlled by the TCM in response to signals transmitted from the transmission range switch, output speed sensor and accelerator pedal position sensor (throttle position sensor). Gears will then be shifted to the optimum position.
- The front brake solenoid valve controls the front brake control valve in response to a signal transmitted from the TCM.

DTC Logic

INFOID:0000000006207733

DTC DETECTION LOGIC

DTC	Trouble diagnosis name	DTC is detected if...	Possible cause
P0795	Pressure Control Solenoid C	The front brake solenoid valve monitor value is 0.4 A or less when the front brake solenoid valve command value is more than 0.75 A.	• Harness or connectors (Solenoid valve circuit is open or shorted.) • Front brake solenoid valve

DTC CONFIRMATION PROCEDURE

CAUTION:

Always drive vehicle at a safe speed.

1.PRECONDITIONING

If “DTC CONFIRMATION PROCEDURE” is previously conducted, always turn ignition switch OFF and wait at least 10 seconds before performing the next test.

>> GO TO 2.

2.CHECK DTC DETECTION

With CONSULT-III

1. Start the engine.
2. Select “BATTERY VOLT”, “MANU MODE SW”, “GEAR” and “VHCL/S SE-A/T” in “Data Monitor” in “TRANSMISSION”.
3. Drive vehicle and maintain the following conditions for 5 seconds or more.

BATTERY VOLT	: 9 V or more
MANU MODE SW	: ON
GEAR	: 7th
VHCL/S SE-A/T	: 10 km/h (7 MPH) or more

4. Perform “Self Diagnostic Results” in “TRANSMISSION”.

With GST

Follow the procedure “With CONSULT-III”.

Is “P0795” detected?

YES >> Go to TM-194, "Diagnosis Procedure".
NO >> INSPECTION END

Diagnosis Procedure

INFOID:0000000006207734

1.CHECK INTERMITTENT INCIDENT

Refer to GI-43, "Intermittent Incident".

Is the inspection result normal?

YES >> Replace control valve & TCM. Refer to TM-283, "Exploded View".
NO >> Repair or replace damaged parts.

P1705 TP SENSOR

Description

INFOID:0000000006207735

- The accelerator pedal position sensor is installed on the upper end of the accelerator pedal assembly.
- The accelerator pedal position sensor detects the accelerator position.
- The accelerator pedal position sensor transform the accelerator pedal position into output voltage, and emit the voltage signal to the ECM.
- The TCM receives accelerator pedal position signal from the ECM via CAN communication.

DTC Logic

INFOID:0000000006207736

DTC DETECTION LOGIC

DTC	Trouble diagnosis name	DTC is detected if...	Possible cause
P1705	Accelerator Pedal Position Sensor Signal Circuit	TCM detects the difference between two accelerator pedal position signals received from ECM via CAN communication.	Harness or connectors (Sensor circuit is open or shorted.)

DTC CONFIRMATION PROCEDURE

1.PRECONDITIONING

If “DTC CONFIRMATION PROCEDURE” is previously conducted, always turn ignition switch OFF and wait at least 10 seconds before performing the next test.

>> GO TO 2.

2.CHECK DTC DETECTION

With CONSULT-III

1. Start the engine.
2. Select “SLCT LVR POSI” and “VHCL/S SE-A/T” in “Data Monitor” in “TRANSMISSION”.
3. Drive vehicle and maintain the following conditions for 5 seconds or more.

SLCT LVR POSI	: D
VHCL/S SE-A/T	: 5 km/h (3 MPH) or more

4. Perform “Self Diagnostic Results” in “TRANSMISSION”.

Is “P1705” detected?

YES >> Go to TM-195, "Diagnosis Procedure".
NO >> INSPECTION END

Diagnosis Procedure

INFOID:0000000006207737

1.CHECK DTC OF ECM

With CONSULT-III

1. Turn ignition switch ON.
2. Perform “Self Diagnostic Results” in “ENGINE”.

Is any DTC detected?

YES >> Check DTC detected item. Refer to EC-1160, "DTC Index" (VQ25HR), EC-583, "DTC Index" (VQ37VHR).
NO >> GO TO 2.

2.CHECK DTC OF TCM

With CONSULT-III

Perform “Self Diagnostic Results” in “TRANSMISSION”.

Is any DTC other than “P1705” detected?

YES >> Check DTC detected item. Refer to TM-251, "DTC Index".

NO >> GO TO 3.

3.CHECK INTERMITTENT INCIDENT

Refer to GI-43, "Intermittent Incident".

Is the inspection result normal?

YES >> Replace control valve & TCM. Refer to TM-283, "Exploded View".
NO >> Repair or replace damaged parts.

P1721 VEHICLE SPEED SIGNAL

Description

INFOID:0000000006207738

The vehicle speed signal is transmitted from unified meter and A/C amp. to TCM via CAN communication line. The signal functions as an auxiliary device to the output speed sensor when it is malfunctioning. The TCM will then use the vehicle speed signal.

DTC Logic

INFOID:0000000006207739

DTC DETECTION LOGIC

DTC	Trouble diagnosis name	DTC is detected if...	Possible cause
P1721	Vehicle Speed Signal Circuit	• The vehicle speed transmitted from the unified meter and A/C amp. to TCM is 5 km/h (3 MPH) or less when the vehicle speed detected by the output speed sensor is 20 km/h (12 MPH) or more. (Only when starts after the ignition switch is turned ON.) • The vehicle speed detected by the output speed sensor does not decrease despite the 36 km/h (23 MPH) or more of deceleration in vehicle speed received from the unified meter and A/C amp. when the vehicle speed transmitted from the unified meter and A/C amp. to TCM is 36 km/h (23 MPH) or more and the vehicle speed detected by the output speed sensor is 24 km/h (15 MPH) or more.	Harness or connectors (Sensor circuit is open or shorted.)

DTC CONFIRMATION PROCEDURE

CAUTION:

- **Always drive vehicle at a safe speed.**
- **Be careful not to rev engine into the red zone on the tachometer.**

1. PRECONDITIONING

If “DTC CONFIRMATION PROCEDURE” is previously conducted, always turn ignition switch OFF and wait at least 10 seconds before performing the next test.

>> GO TO 2.

2. CHECK DTC DETECTION

With CONSULT-III

1. Start the engine.
2. Select “ESTM VSP SIG” in “Data Monitor” in “TRANSMISSION”.
3. Drive vehicle and maintain the following conditions for 60 seconds or more.

ESTM VSP SIG	: 40 km/h (25 MPH) or more

4. Perform “Self Diagnostic Results” in “TRANSMISSION”.

Is “P1721” detected?

YES >> Go to TM-198, "Diagnosis Procedure".
NO >> INSPECTION END

Diagnosis Procedure

INFOID:0000000006207740

1.CHECK DTC OF UNIFIED METER AND A/C AMP.

With CONSULT-III

Perform “Self Diagnostic Results” in “METER/M&A”.

Is any DTC detected?

YES >> Check DTC detected item. Refer to MWI-107, "DTC Index".
NO >> GO TO 2.

2.CHECK DTC OF TCM

With CONSULT-III

Perform “Self Diagnostic Results” in “TRANSMISSION”.

Is any DTC other than “P1721” detected?

YES >> Check DTC detected item. Refer to TM-251, "DTC Index".
NO >> GO TO 3.

3.CHECK INTERMITTENT INCIDENT

Refer to GI-43, "Intermittent Incident".

Is the inspection result normal?

YES >> Replace control valve & TCM. Refer to TM-283, "Exploded View".
NO >> Repair or replace damaged parts.

P1730 INTERLOCK

Description

INFOID:0000000006207741

Fail-safe function to detect interlock conditions.

DTC Logic

INFOID:0000000006207742

DTC DETECTION LOGIC

DTC	Trouble diagnosis name	DTC is detected if...	Possible cause
P1730	Interlock	The output speed sensor detects the deceleration of 12 km/h (7 MPH) or more for 1 second.	• Harness or connectors (Solenoid valve circuit is open or shorted.) • Input clutch solenoid valve • Direct clutch solenoid valve • High and low reverse clutch solenoid valve • Front brake solenoid valve • Low brake solenoid valve • 2346 brake solenoid valve • Anti-interlock solenoid valve • Each clutch and brake • Hydraulic control circuit

NOTE:
When the vehicle is driven fixed in 2GR, a input speed sensor malfunction is displayed, but this is not a input speed sensor malfunction.

DTC CONFIRMATION PROCEDURE

CAUTION:
- **"TM-200, "Diagnosis Procedure"" must be performed before starting "DTC CONFIRMATION PROCEDURE".**
- **Never perform "DTC CONFIRMATION PROCEDURE" before completing the repair, which may cause secondary malfunction.**
- **Always drive vehicle at a safe speed.**

1. PRECONDITIONING

If "DTC CONFIRMATION PROCEDURE" is previously conducted, always turn ignition switch OFF and wait at least 10 seconds before performing the next test.

>> GO TO 2.

2. CHECK DTC DETECTION

With CONSULT-III
1. Start the engine.
2. Select "SLCT LVR POSI" and "GEAR" in "Data Monitor" in "TRANSMISSION".
3. Drive vehicle the following condition.

SLCT LVR POSI	: D
GEAR	: 1st through 7th

4. Perform "Self Diagnostic Results" in "TRANSMISSION".

With GST
Follow the procedure "With CONSULT-III".

Is "P1730" detected?

YES >> Go to TM-200, "Diagnosis Procedure".
NO >> INSPECTION END

Judgment of A/T Interlock

INFOID:0000000006207743

Refer to TM-246, "Fail-Safe".

Diagnosis Procedure

INFOID:0000000006207744

1. CHECK INTERMITTENT INCIDENT

Refer to GI-43, "Intermittent Incident".

Is the inspection result normal?

YES >> GO TO 2.
NO >> Repair or replace damaged parts.

2. DETECT MALFUNCTIONING ITEM

Disassemble the A/T assembly to check component parts. Refer to TM-335, "Disassembly".

NOTE:
Check the component parts, referring to “Possible cause” in “DTC DETECTION LOGIC”. Refer to TM-199, "DTC Logic".

Is the inspection result normal?

YES >> Replace control valve & TCM. Refer to TM-283, "Exploded View".
NO >> Repair or replace damaged parts.

P1734 7GR INCORRECT RATIO

Description

INFOID:0000000006207745

This malfunction is detected when the A/T does not shift into 7GR position as instructed by TCM. This is not only caused by electrical malfunction (circuits open or shorted) but by mechanical malfunction such as control valve sticking, improper solenoid valve operation, etc.

DTC Logic

INFOID:0000000006207746

DTC DETECTION LOGIC

DTC	Trouble diagnosis name	DTC is detected if...	Possible cause
P1734	Gear 7 Incorrect Ratio	The gear ratio is: • VQ25HR - 0.822 or more - 0.730 or less • VQ37VHR - 0.818 or more - 0.728 or less	• Input clutch solenoid valve • Direct clutch solenoid valve • High and low reverse clutch solenoid valve • Front brake solenoid valve • Low brake solenoid valve • 2346 brake solenoid valve • Anti-interlock solenoid valve • Each clutch and brake • Output speed sensor • Input speed sensor 1, 2 • Hydraulic control circuit

DTC CONFIRMATION PROCEDURE

CAUTION:

- **"TM-202, "Diagnosis Procedure"" must be performed before starting "DTC CONFIRMATION PROCEDURE".**
- **Never perform "DTC CONFIRMATION PROCEDURE" before completing the repair, which may cause secondary malfunction.**
- **Always drive vehicle at a safe speed.**

1. PRECONDITIONING

If "DTC CONFIRMATION PROCEDURE" is previously conducted, always turn ignition switch OFF and wait at least 10 seconds before performing the next test.

>> GO TO 2.

2. CHECK ATF TEMPERATURE

With CONSULT-III

1. Start the engine.
2. Select "ATF TEMP 1" in "Data Monitor" in "TRANSMISSION".
3. Check ATF temperature is in the following range.

ATF TEMP 1 : 20°C (68°F) – 140°C (284°F)

With GST

1. Start the engine.
2. Drive vehicle for approximately 5 minutes in urban areas.

Is ATF temperature within specified range?

YES >> GO TO 3.
NO >> Drive vehicle to warm ATF or stop engine to cool ATF.

3. CHECK SYMPTOM (PART 1)

With CONSULT-III

1. Select "7TH GR FNCTN P1734" in "DTC & SRT confirmation" in "TRANSMISSION".
2. Drive vehicle with manual mode and maintain the following conditions.

GEAR	: 7
ACCELE POSI	: 0.7/8 or more
VEHICLE SPEED	: 10 km/h (7 MPH) or more

3. Keep the current driving status for 2 seconds or more if CONSULT-III screen changes from “OUT OF CONDITION” to “TESTING”.
CAUTION:
When “TESTING” is not indicated on CONSULT-III for a long time, check “Self Diagnostic Results” in “TRANSMISSION”. When a DTC other than “P1734” is detected, check the DTC. Refer to TM-151, "CONSULT-III Function (TRANSMISSION)".

With GST
1. Drive vehicle and maintain the following conditions for 2 seconds or more.

Selector lever	: “M” position
Gear position	: 7th
Accelerator pedal opening	: 0.7/8 or more
Vehicle speed	: 10 km/h (7 MPH) or more

2. Check DTC.

Is “OUT OF CONDITION”, “STOP VEHICLE” or “COMPLETED RESULT NG” displayed? / Is “P1734” detected?

YES-1 >> “OUT OF CONDITION”: Perform “Step 3” again.
YES-2 >> “STOP VEHICLE”: GO TO 4.
YES-3 >> “COMPLETED RESULT NG”: Go to TM-202, "Diagnosis Procedure".
YES-4 >> “P1734” is detected: Go to TM-202, "Diagnosis Procedure".
NO >> GO TO 4.

4.CHECK SYMPTOM (PART 2)

With CONSULT-III
1. Stop vehicle.
2. Drive vehicle in “D” position allowing it to shift from 1GR to 7GR and check shift timing and shift shock.

>> INSPECTION END

Diagnosis Procedure

INFOID:0000000006207747

1.CHECK INTERMITTENT INCIDENT

Refer to GI-43, "Intermittent Incident".

Is the inspection result normal?

YES >> GO TO 2.
NO >> Repair or replace damaged parts.

2.DETECT MALFUNCTIONING ITEM

Disassemble the A/T assembly to check component parts. Refer to TM-335, "Disassembly".
NOTE:
Check the component parts, referring to “Possible cause” in “DTC DETECTION LOGIC”. Refer to TM-201, "DTC Logic".

Is the inspection result normal?

YES >> Replace control valve & TCM. Refer to TM-283, "Exploded View".
NO >> Repair or replace damaged parts.

P1815 M-MODE SWITCH

Description

INFOID:0000000006207748

- The manual mode switch [manual mode select switch and manual mode position select switch (shift-up/shift-down)] is installed in the A/T shift selector assembly. It transmits manual mode switch, shift up and shift down switch signals to unified meter and A/C amp. Then unified meter and A/C amp. transmits signals to TCM via CAN communication.
- Manual mode select switch transmits manual mode switch signal or non-manual mode switch signal to unified meter and A/C amp. Then TCM receives signals from unified meter and A/C amp. via CAN communication.
- The manual mode position select switch (shift-up) transmits manual mode shift up signal to the unified meter and A/C amp. Then TCM receives signal from the unified meter and A/C amp. via CAN communication.
- The manual mode position select switch (shift-down) transmits manual mode shift down signal to the unified meter and A/C amp. Then TCM receives signal from the unified meter and A/C amp. via CAN communication.
- The paddle shifter transmits shift up and shift down switch signals to unified meter and A/C amp. Then TCM receives signals from the unified meter and A/C amp. via CAN communication. (With paddle shifter)
- The TCM transmits manual mode indicator signal to the unified meter and A/C amp. via CAN communication line.

DTC Logic

INFOID:0000000006207749

DTC DETECTION LOGIC

DTC	Trouble diagnosis name	DTC is detected if...	Possible cause
P1815	Manual Mode Switch Circuit	• The TCM receives multiple signals from the manual mode switch or receives no signals for continuously 2 second or more. • Shift up/down signal of paddle shifter continuously remains ON for 60 seconds.*	• Harness or connectors (These switches circuit is open or shorted.) • Manual mode select switch (Into A/T shift selector assembly) • Manual mode position select switch (Into A/T shift selector assembly) • Paddle shifter*

*: With paddle shifter

DTC CONFIRMATION PROCEDURE

1.PRECONDITIONING

If “DTC CONFIRMATION PROCEDURE” is previously conducted, always turn ignition switch OFF and wait at least 10 seconds before performing the next test.

>> GO TO 2.

2.CHECK DTC DETECTION

With CONSULT-III

1. Turn ignition switch ON.
2. Select “SLCT LVR POSI” and “MANU MODE SW” in “Data Monitor” in “TRANSMISSION”.
3. Maintain the following each conditions more than 60 seconds.

SLCT LVR POSI : D
MANU MODE SW : ON

4. Perform “Self Diagnostic Results” in “TRANSMISSION”.

Is “P1815” detected?

YES >> Go to TM-204, "Diagnosis Procedure".
NO >> INSPECTION END

Diagnosis Procedure

INFOID:0000000006207750

1. CHECK MANUAL MODE SWITCH CIRCUIT

With CONSULT-III

1. Turn ignition switch ON.
2. Select “MANU MODE SW”, “NON M MODE SW”, “UP SW LEVER”, “DOWN SW LEVER”, “SFT UP ST SW”* and “SFT DWN ST SW”* in “Data Monitor” in “TRANSMISSION”.
3. Check the ON/OFF operations of each monitor item.

Item	Monitor Item	Condition	Status
Manual mode switch	MANU MODE SW	Selector lever is shifted to manual shift gate side	ON
		Other than the above	OFF
	NON M-MODE SW	Selector lever is shifted to manual shift gate side	OFF
		Other than the above	ON
	UP SW LEVER	Selector lever is shifted to + side	ON
		Other than the above	OFF
	DOWN SW LEVER	Selector lever is shifted to – side	ON
		Other than the above	OFF
Paddle shifter*	SFT UP ST SW	Paddle shifter (shift-up) is pulled	ON
		Other than the above	OFF
	SFT DWN ST SW	Paddle shifter (shift-down) is pulled	ON
		Other than the above	OFF

*: With paddle shifter

Without CONSULT-III

Drive the vehicle in the manual mode, and then check that the indication of the shift position indicator matches with the actual gear position.

1. Shift the selector lever to UP side, and then accelerate from 1GR to 7GR.
2. Shift the selector lever to DOWN side, and then decelerate from 7GR to 1GR.
3. *Shift the paddle shifter to UP side, and then accelerate from 1GR to 7GR.
4. *Shift the paddle shifter to DOWN side, and then decelerate from 7GR to 1GR.

*: With paddle shifter

Which item is abnormal?

Manual mode switch>>GO TO 2.
Paddle shifter>>GO TO 8.

2. CHECK MANUAL MODE SWITCH CIRCUIT

1. Turn ignition switch OFF.
2. Disconnect A/T shift selector connector.
3. Turn ignition switch ON.
4. Check voltage between A/T shift selector vehicle side harness connector terminals.

A/T shift selector vehicle side harness connector			Voltage (Approx.)
Connector	Terminal		
	+	–	
M137	1	4	Battery voltage
	2		
	3		
	5		

Is the inspection result normal?

YES >> GO TO 3.

NO >> GO TO 5.

3.CHECK MANUAL MODE SWITCH

Check manual mode switch. Refer to TM-207, "Component Inspection (Manual Mode Switch)".

Is the inspection result normal?

YES >> GO TO 4.
NO >> Repair or replace damaged parts.

4.CHECK MALFUNCTIONING ITEM

Check the following.
- Check terminals of A/T shift selector harness connector and harness cladding for damage.
- Check connector for loose connection.

Is the inspection result normal?

YES >> GO TO 14.
NO >> Repair or replace damaged parts.

5.CHECK GROUND CIRCUIT

Check continuity between A/T shift selector vehicle side harness connector terminal and ground.

A/T shift selector vehicle side harness connector		Ground	Continuity
Connector	Terminal		
M137	4		Existed

Is the inspection result normal?

YES >> GO TO 6.
NO >> Repair or replace damaged parts.

6.CHECK HARNESS BETWEEN A/T SHIFT SELECTOR AND UNIFIED METER AND A/C AMP. (PART 1)

1. Turn ignition switch OFF.
2. Disconnect unified meter and A/C amp. connector.
3. Check continuity between A/T shift selector vehicle side harness connector terminals and unified meter and A/C amp. vehicle side harness connector terminals.

A/T shift selector vehicle side harness connector		Unified meter and A/C amp. vehicle side harness connector		Continuity
Connector	Terminal	Connector	Terminal	
M137	1	M66	10	Existed
	2		25	
	3		5	
	5		11	

Is the inspection result normal?

YES >> GO TO 7.
NO >> Repair or replace damaged parts.

7.CHECK HARNESS BETWEEN A/T SHIFT SELECTOR AND UNIFIED METER AND A/C AMP. (PART 2)

Check continuity between A/T shift selector vehicle side harness connector terminals and ground.

A/T shift selector vehicle side harness connector		Ground	Continuity
Connector	Terminal		
M137	1		Not existed
	2		
	3		
	5		

Is the inspection result normal?

YES >> GO TO 14.

NO >> Repair or replace damaged parts.

8.CHECK PADDLE SHIFTER CIRCUIT

1. Turn ignition switch OFF.
2. Disconnect paddle shifter connectors.
3. Turn ignition switch ON.
4. Check voltage between paddle shifter vehicle side harness connector terminals.

Paddle shifter vehicle side harness connector			Voltage (Approx.)
Connector	Terminal		
	+	–	
M32	3	1	Battery voltage
M39			

Is the inspection result normal?

YES >> GO TO 9.
NO >> GO TO 11.

9.CHECK PADDLE SHIFTER

Check paddle shifter. Refer to TM-208, "Component Inspection [Paddle Shifter (Shift-up)]", TM-208, "Component Inspection [Paddle Shifter (Shift-down)]".

Is the inspection result normal?

YES >> GO TO 10.
NO >> Repair or replace damaged parts.

10.CHECK MALFUNCTIONING ITEM

Check the following.
- Check terminals of paddle shifter connector for damage.
- Check connector for loose connection.

Is the inspection result normal?

YES >> GO TO 14.
NO >> Repair or replace damaged parts.

11.CHECK GROUND CIRCUIT

Check continuity between paddle shifter vehicle side harness connector terminals and ground.

Paddle shifter vehicle side harness connector		Ground	Continuity
Connector	Terminal		
M32	1		Existed
M39			

Is the inspection result normal?

YES >> GO TO 12.
NO >> Repair or replace damaged parts.

12.CHECK HARNESS BETWEEN PADDLE SHIFTER AND UNIFIED METER AND A/C AMP. (PART 1)

1. Turn ignition switch OFF.
2. Disconnect unified meter and A/C amp. connector.
3. Check continuity between paddle shifter vehicle side harness connector terminals and unified meter and A/C amp. vehicle side harness connector terminals.

Paddle shifter vehicle side harness connector		Unified meter and A/C amp. vehicle side harness connector		Continuity
Connector	Terminal	Connector	Terminal	
M32	3	M66	26	Existed
M39			6	

Is the inspection result normal?

YES >> GO TO 13.
NO >> Repair or replace damaged parts.

13. CHECK HARNESS BETWEEN PADDLE SHIFTER AND UNIFIED METER AND A/C AMP. (PART 2)

Check continuity between paddle shifter vehicle side harness connector terminals and ground.

Paddle shifter vehicle side harness connector		Ground	Continuity
Connector	Terminal		
M32	3		Not existed
M39			

Is the inspection result normal?

YES >> GO TO 14.
NO >> Repair or replace damaged parts.

14. CHECK MALFUNCTIONING ITEM

Check the following.
- Check terminals of unified meter and A/C amp. connector for damage.
- Check connector for loose connection.

Is the inspection result normal?

YES >> GO TO 15.
NO >> Repair or replace damaged parts.

15. CHECK UNIFIED METER AND A/C AMP.

1. Reconnect all the connectors.
2. Turn ignition switch ON.
3. Select “M RANGE SW”, “NM RANGE SW”, “AT SFT UP SW”, “AT SFT DWN SW”, “ST SFT UP SW”* and “ST SFT DWN SW”* in “Data Monitor” in “METER/M&A”.
   *: With paddle shifter
4. Check the ON/OFF operations of each monitor item. Refer to MWI-86, "Reference Value".

Is the inspection result normal?

YES >> GO TO 16.
NO >> Replace unified meter and A/C amp. Refer to MWI-136, "Exploded View".

16. CHECK INTERMITTENT INCIDENT

Refer to GI-43, "Intermittent Incident".

Is the inspection result normal?

YES >> Replace control valve & TCM. Refer to TM-283, "Exploded View".
NO >> Repair or replace damaged parts.

Component Inspection (Manual Mode Switch)

INFOID:0000000006207751

1. CHECK MANUAL MODE SWITCH

Check continuity between A/T shift selector harness connector terminals.

A/T shift selector harness connector			Condition	Continuity
Connector	Terminal			
M137	1	4	Selector lever is shifted to manual shift gate side	Existed
			Other than the above	Not existed
	2		Selector lever is shifted to – side	Existed
			Other than the above	Not existed
	3		Selector lever is shifted to+ side	Existed
			Other than the above	Not existed
	5		Selector lever is shifted to manual shift gate side	Not existed
			Other than the above	Existed

Is the inspection result normal?

YES >> INSPECTION END
NO >> Repair or replace damaged parts. Refer to TM-276, "2WD : Exploded View" (2WD) or TM-278, "AWD : Exploded View" (AWD).

Component Inspection [Paddle Shifter (Shift-up)]

INFOID:0000000006207752

1.CHECK PADDLE SHIFTER

Check continuity between paddle shifter (shift-up) connector terminals.

Paddle shifter (shift-up) connector			Condition	Continuity
Connector	Terminal			
M39	1	3	Paddle shifter (shift-up) is pulled.	Existed
			Other than the above	Not existed

Is the inspection result normal?

YES >> INSPECTION END
NO >> Replace damaged parts. Refer to TM-282, "Exploded View".

Component Inspection [Paddle Shifter (Shift-down)]

INFOID:0000000006207753

1.CHECK PADDLE SHIFTER

Check continuity between paddle shifter (shift-down) connector terminals.

Paddle shifter (shift-down) connector			Condition	Continuity
Connector	Terminal			
M32	1	3	Paddle shifter (shift-down) is pulled.	Existed
			Other than the above	Not existed

Is the inspection result normal?

YES >> INSPECTION END
NO >> Replace damaged parts. Refer to TM-282, "Exploded View".

P2713 PRESSURE CONTROL SOLENOID D

Description

INFOID:0000000006207754

- The high and low reverse clutch solenoid valve is controlled by the TCM in response to signals transmitted from the transmission range switch, output speed sensor and accelerator pedal position sensor (throttle position sensor). Gears will then be shifted to the optimum position.
- The high and low reverse clutch solenoid valve controls the high and low reverse clutch control valve in response to a signal transmitted from the TCM.

DTC Logic

INFOID:0000000006207755

DTC DETECTION LOGIC

DTC	Trouble diagnosis name	DTC is detected if...	Possible cause
P2713	Pressure Control Solenoid D	The high and low reverse clutch solenoid valve monitor value is 0.4 A or less when the high and low reverse clutch solenoid valve command value is more than 0.75 A.	• Harness or connectors (Solenoid valve circuit is open or shorted.) • High and low reverse clutch solenoid valve

DTC CONFIRMATION PROCEDURE

CAUTION:

Always drive vehicle at a safe speed.

1. PRECONDITIONING

If “DTC CONFIRMATION PROCEDURE” is previously conducted, always turn ignition switch OFF and wait at least 10 seconds before performing the next test.

>> GO TO 2.

2. CHECK DTC DETECTION

With CONSULT-III

1. Start the engine.
2. Select “BATTERY VOLT”, “MANU MODE SW”, “GEAR” and “VHCL/S SE-A/T” in “Data Monitor” in “TRANSMISSION”.
3. Drive the vehicle and maintain the following conditions for 5 seconds or more.

BATTERY VOLT	: 9 V or more
MANU MODE SW	: ON
GEAR	: 3rd
VHCL/S SE-A/T	: 10 km/h (7 MPH) or more

4. Perform “Self Diagnostic Results” in “TRANSMISSION”.

With GST

Follow the procedure “With CONSULT-III”.

Is “P2713” detected?

YES >> Go to TM-209, "Diagnosis Procedure".
NO >> INSPECTION END

Diagnosis Procedure

INFOID:0000000006207756

1. CHECK INTERMITTENT INCIDENT

Refer to GI-43, "Intermittent Incident".

Is the inspection result normal?

YES >> Replace control valve & TCM. Refer to TM-283, "Exploded View".
NO >> Repair or replace damaged parts.

P2722 PRESSURE CONTROL SOLENOID E

Description

INFOID:0000000006207757

- The low brake solenoid valve is controlled by the TCM in response to signals transmitted from the transmission range switch, output speed sensor and accelerator pedal position sensor (throttle position sensor). Gears will then be shifted to the optimum position.
- The low brake solenoid valve controls the low brake control valve in response to a signal transmitted from the TCM.

DTC Logic

INFOID:0000000006207758

DTC DETECTION LOGIC

DTC	Trouble diagnosis name	DTC is detected if...	Possible cause
P2722	Pressure Control Solenoid E	The low brake solenoid valve monitor value is 0.4 A or less when the low brake solenoid valve command value is more than 0.75 A.	• Harness or connectors (Solenoid valve circuit is open or shorted.) • Low brake solenoid valve

DTC CONFIRMATION PROCEDURE

CAUTION:

Always drive vehicle at a safe speed.

1.PRECONDITIONING

If “DTC CONFIRMATION PROCEDURE” is previously conducted, always turn ignition switch OFF and wait at least 10 seconds before performing the next test.

>> GO TO 2.

2.CHECK DTC DETECTION

With CONSULT-III

1. Start the engine.
2. Select “BATTERY VOLT”, “MANU MODE SW”, “GEAR” and “VHCL/S SE-A/T” in “Data Monitor” in “TRANSMISSION”.
3. Drive vehicle and maintain the following conditions for 5 seconds or more.

BATTERY VOLT	: 9 V or more
MANU MODE SW	: ON
GEAR	: 1st
VHCL/S SE-A/T	: 10 km/h (7 MPH) or more

4. Perform “Self Diagnostic Results” in “TRANSMISSION”.

With GST

Follow the procedure “With CONSULT-III”.

Is “P2722” detected?

YES >> Go to TM-210, "Diagnosis Procedure".
NO >> INSPECTION END

Diagnosis Procedure

INFOID:0000000006207759

1.CHECK INTERMITTENT INCIDENT

Refer to GI-43, "Intermittent Incident".

Is the inspection result normal?

YES >> Replace control valve & TCM. Refer to TM-283, "Exploded View".
NO >> Repair or replace damaged parts.

P2731 PRESSURE CONTROL SOLENOID F

Description

INFOID:0000000006207760

- The 2346 brake solenoid valve is controlled by the TCM in response to signals transmitted from the transmission range switch, output speed sensor and accelerator pedal position sensor (throttle position sensor). Gears will then be shifted to the optimum position.
- The 2346 brake solenoid valve controls the 2346 brake control valve in response to a signal transmitted from the TCM.

DTC Logic

INFOID:0000000006207761

DTC DETECTION LOGIC

DTC	Trouble diagnosis name	DTC is detected if...	Possible cause
P2731	Pressure Control Solenoid F	The 2346 brake solenoid valve monitor value is 0.4 A or less when the 2346 brake solenoid valve command value is more than 0.75 A.	• Harness or connectors (Solenoid valve circuit is open or shorted.) • 2346 brake solenoid valve

DTC CONFIRMATION PROCEDURE

CAUTION:

Always drive vehicle at a safe speed.

1. PRECONDITIONING

If “DTC CONFIRMATION PROCEDURE” is previously conducted, always turn ignition switch OFF and wait at least 10 seconds before performing the next test.

>> GO TO 2.

2. CHECK DTC DETECTION

With CONSULT-III

1. Start the engine.
2. Select “BATTERY VOLT”, “MANU MODE SW”, “GEAR” and “VHCL/S SE-A/T” in “Data Monitor” in “TRANSMISSION”.
3. Drive vehicle and maintain the following conditions for 5 seconds or more.

BATTERY VOLT	: 9 V or more
MANU MODE SW	: ON
GEAR	: 2nd
VHCL/S SE-A/T	: 10 km/h (7 MPH) or more

4. Perform “Self Diagnostic Results” in “TRANSMISSION”.

With GST

Follow the procedure “With CONSULT-III”.

Is “P2731” detected?

YES >> Go to TM-211, "Diagnosis Procedure".
NO >> INSPECTION END

Diagnosis Procedure

INFOID:0000000006207762

1. CHECK INTERMITTENT INCIDENT

Refer to GI-43, "Intermittent Incident".

Is the inspection result normal?

YES >> Replace control valve & TCM. Refer to TM-283, "Exploded View".
NO >> Repair or replace damaged parts.

P2807 PRESSURE CONTROL SOLENOID G

Description

INFOID:0000000006207763

- The direct clutch solenoid valve is controlled by the TCM in response to signals transmitted from the transmission range switch, output speed sensor and accelerator pedal position sensor (throttle position sensor). Gears will then be shifted to the optimum position.
- The direct clutch solenoid valve controls the direct clutch control valve in response to a signal transmitted from the TCM.

DTC Logic

INFOID:0000000006207764

DTC DETECTION LOGIC

DTC	Trouble diagnosis name	DTC is detected is...	Possible cause
P2807	Pressure Control Solenoid G	The direct clutch solenoid valve monitor value is 0.4 A or less when the direct clutch solenoid valve command value is more than 0.75 A.	• Harness or connectors (Solenoid valve circuit is open or shorted.) • Direct clutch solenoid valve

DTC CONFIRMATION PROCEDURE

CAUTION:

Always drive vehicle at a safe speed.

1. PRECONDITIONING

If “DTC CONFIRMATION PROCEDURE” is previously conducted, always turn ignition switch OFF and wait at least 10 seconds before performing the next test.

>> GO TO 2.

2. CHECK DTC DETECTION

With CONSULT-III

1. Start the engine.
2. Select “BATTERY VOLT”, “MANU MODE SW”, “GEAR” and “VHCL/S SE-A/T” in “Data Monitor” in “TRANSMISSION”.
3. Drive vehicle and maintain the following conditions for 5 seconds or more.

BATTERY VOLT	: 9 V or more
MANU MODE SW	: ON
GEAR	: 1st
VHCL/S SE-A/T	: 10 km/h (7 MPH) or more

4. Perform “Self Diagnostic Results” in “TRANSMISSION”.

With GST

Follow the procedure “With CONSULT-III”.

Is “P2807” detected?

YES >> Go to TM-212, "Diagnosis Procedure".
NO >> INSPECTION END

Diagnosis Procedure

INFOID:0000000006207765

1. CHECK INTERMITTENT INCIDENT

Refer to GI-43, "Intermittent Incident".

Is the inspection result normal?

YES >> Replace control valve & TCM. Refer to TM-283, "Exploded View".
NO >> Repair or replace damaged parts.

MAIN POWER SUPPLY AND GROUND CIRCUIT

Diagnosis Procedure

INFOID:0000000006207766

1.CHECK TCM POWER SOURCE (PART 1)

1. Turn ignition switch OFF.
2. Disconnect A/T assembly connector.
3. Check voltage between A/T assembly vehicle side harness connector terminal and ground.

A/T assembly vehicle side harness connector		Ground	Condition	Voltage (Approx.)
Connector	Terminal			
F51	2		Always	Battery voltage

Is the inspection result normal?

YES >> GO TO 2.
NO >> GO TO 6.

2.CHECK TCM POWER SOURCE (PART 2)

Check voltage between A/T assembly vehicle side harness connector terminals and ground.

A/T assembly vehicle side harness connector		Ground	Condition	Voltage (Approx.)
Connector	Terminal			
F51	1		Turn ignition switch ON	Battery voltage
			Turn ignition switch OFF	0 V
	6		Turn ignition switch ON	Battery voltage
			Turn ignition switch OFF	0 V

Is the inspection result normal?

YES >> GO TO 3.
NO >> GO TO 7.

3.CHECK TCM GROUND CIRCUIT

Check continuity between A/T assembly vehicle side harness connector terminals and ground.

A/T assembly vehicle side harness connector		Ground	Continuity
Connector	Terminal		
F51	5		Existed
	10		

Is the inspection result normal?

YES >> GO TO 4.
NO >> Repair or replace damaged parts.

4.CHECK JOINT CONNECTOR

1. Remove joint connector. Refer to TM-283, "Exploded View".
2. Check the continuity between joint connector terminals.

A/T assembly harness connector side	TCM harness connector side	Continuity
Terminal	Terminal	
1	1	Existed
2	2	
5	5	
6	6	
10	10	

Is the inspection result normal?

YES >> GO TO 5.
NO >> Repair or replace damaged parts.

5. CHECK INTERMITTENT INCIDENT

Refer to GI-43, "Intermittent Incident".

Is the inspection result normal?

YES >> Replace the control valve & TCM. Refer to TM-283, "Exploded View".
NO >> Repair or replace damaged parts.

6. DETECT MALFUNCTIONING ITEM

Check the following.
- Harness for short or open between battery positive terminal and A/T assembly vehicle side harness connector terminal 2. Refer to PG-6, "Wiring Diagram - BATTERY POWER SUPPLY -".
- Battery
- 10A fuse (No.36, located in the fuse, fusible link and relay box). Refer to PG-126, "Fuse and Fusible Link Arrangement".

Is the inspection result normal?

YES >> Check intermittent incident. Refer to GI-43, "Intermittent Incident".
NO >> Repair or replace damaged parts.

7. CHECK HARNESS BETWEEN IPDM E/R AND A/T ASSEMBLY (PART 1)

1. Turn ignition switch OFF.
2. Disconnect IPDM E/R connector.
3. Check continuity between IPDM E/R vehicle side harness connector terminal and A/T assembly vehicle side harness connector terminals.

IPDM E/R vehicle side harness connector		A/T assembly vehicle side harness connector		Continuity
Connector	Terminal	Connector	Terminal	
E7	58	F51	1	Existed
			6	

Is the inspection result normal?

YES >> GO TO 8.
NO >> Repair or replace damaged parts.

8. CHECK HARNESS BETWEEN IPDM E/R AND A/T ASSEMBLY (PART 2)

Check continuity between A/T assembly vehicle side harness connector terminal and ground.

A/T assembly vehicle side harness connector		Ground	Continuity
Connector	Terminal		
F51	1		Not existed
	6		

Is the inspection result normal?

YES >> GO TO 9.
NO >> Repair or replace damaged parts.

9. DETECT MALFUNCTIONING ITEM

Check the following.
- Harness for short or open between ignition switch and IPDM E/R. Refer to PG-65, "Wiring Diagram - IGNITION POWER SUPPLY -".
- Ignition switch
- 10A fuse (No.43, located in the IPDM E/R). Refer to PG-127, "Fuse, Connector and Terminal Arrangement".
- IPDM E/R

Is the inspection result normal?

YES >> Check intermittent incident. Refer to GI-43, "Intermittent Incident".
NO >> Repair or replace damaged parts.

SHIFT POSITION INDICATOR CIRCUIT

Description

INFOID:0000000006207767

TCM transmit the switch signals to unified meter and A/C amp. via CAN communication line. Then manual mode switch position is indicated on the shift position indicator.

Component Function Check

INFOID:0000000006207768

1. CHECK A/T INDICATOR

CAUTION:
Always drive vehicle at a safe speed.

1. Start the engine.
2. Check the actual selector lever position (“P”, “R”, “N”, “D” and “DS”) and the indication of the shift position indicator mutually coincide.
3. Drive vehicle in the manual mode, and then check that the actual gear position and the indication of the shift position indicator mutually coincide when the selector lever is shifted to “UP (+ side)” or “DOWN (– side)” side (1GR ⇔ 7GR).

Is the inspection result normal?

YES >> INSPECTION END
NO >> Go to TM-215, "Diagnosis Procedure".

Diagnosis Procedure

INFOID:0000000006207769

1. CHECK INPUT SIGNALS

With CONSULT-III

1. Start the engine.
2. Select “SLCT LVR POSI” in “Data Monitor” in “TRANSMISSION”.
3. Check the actual selector lever position (“P”, “R”, “N”, “D” and “DS”) and the indication of the “SLCT LVR POSI” mutually coincide. Refer to TM-232, "Reference Value".
4. Drive vehicle in the manual mode, and then check that the actual gear position and the indication of the “SLCT LVR POSI” mutually coincide when the selector lever is shifted to the “UP (+ side)” or “DOWN (– side)” side (1GR ⇔ 7GR). Refer to TM-232, "Reference Value".

Is the inspection result normal?

YES >> INSPECTION END
NO-1 >> The actual gear position does not change, or shifting into the manual mode is not possible (no gear shifting in the manual mode possible). Or the shift position indicator is not indicated.
- Check manual mode switch. Refer to TM-207, "Component Inspection (Manual Mode Switch)".
- Check A/T main system (Fail-safe function actuated).
  - Perform “Self Diagnostic Results” in “TRANSMISSION”. Refer to TM-151, "CONSULT-III Function (TRANSMISSION)".

NO-2 >> The actual gear position changes, but the shift position indicator is not indicated.
- Perform “Self Diagnostic Results” in “TRANSMISSION”. Refer to TM-151, "CONSULT-III Function (TRANSMISSION)".

NO-3 >> The actual gear position and the indication on the shift position indicator do not coincide.
- Perform “Self Diagnostic Results” in “TRANSMISSION”. Refer to TM-151, "CONSULT-III Function (TRANSMISSION)".

NO-4 >> Only a specific position or positions is/are not indicated on the shift position indicator.
- Check the unified meter and A/C amp. Refer to MWI-86, "Reference Value".

SHIFT LOCK SYSTEM

Description

INFOID:0000000006207770

Refer to TM-148, "System Description".

Wiring Diagram - A/T SHIFT LOCK SYSTEM -

INFOID:0000000006207771

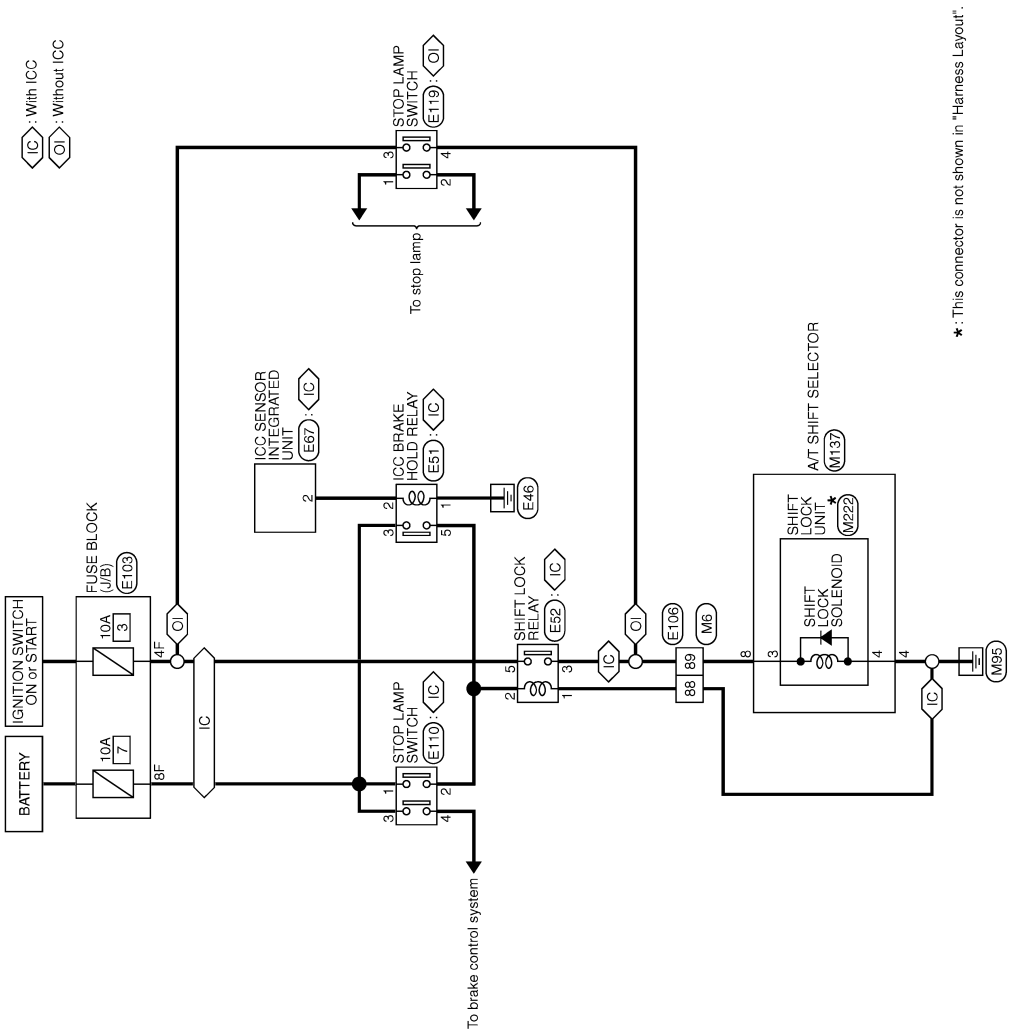

A/T SHIFT LOCK SYSTEM

2010/08/18

JCDWM1194GB

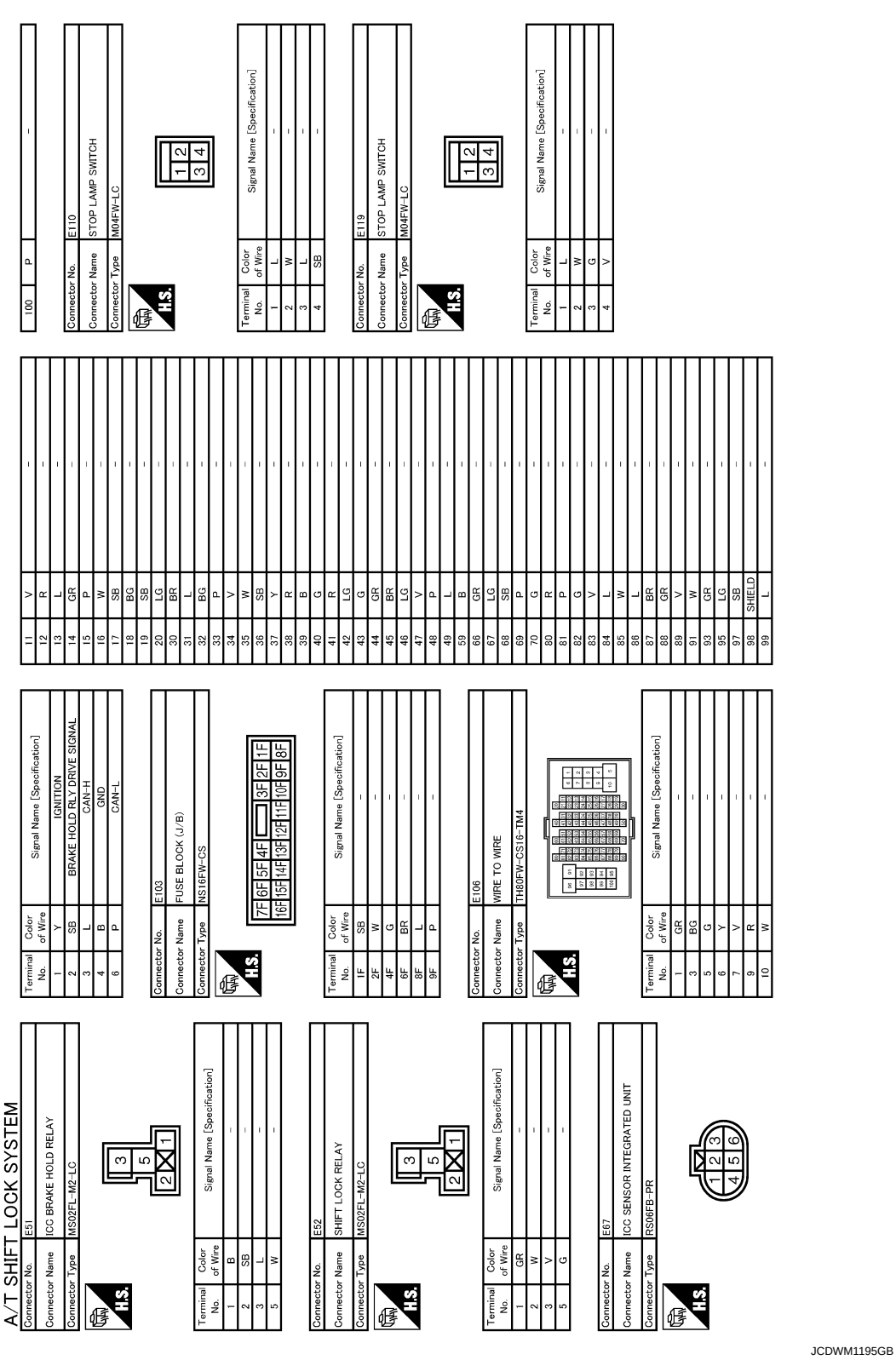

JCDWM1195GB

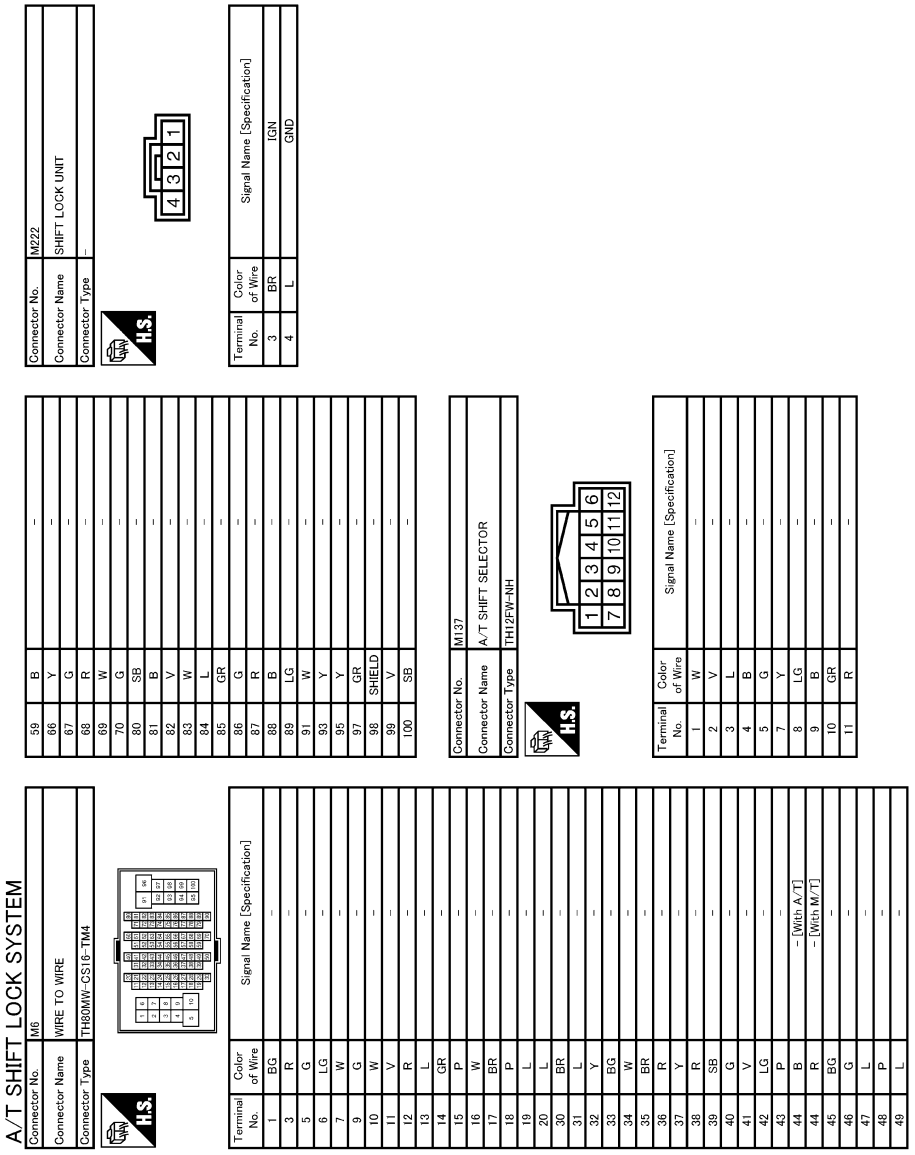

JCDWM1196GB

WITH ICC

WITH ICC : Component Function Check

INFOID:0000000006207772

1. CHECK A/T SHIFT LOCK OPERATION (STEP 1)

1. Turn ignition switch ON.
2. Shift the selector lever to the “P” position.

3. Attempt to shift the selector lever to any other position with the brake pedal released.

Can the selector lever be shifted to any other position?

YES >> Go to TM-219, "WITH ICC : Diagnosis Procedure".
NO >> GO TO 2.

2.CHECK A/T SHIFT LOCK OPERATION (STEP 2)

Attempt to shift the selector lever to any other position with the brake pedal depressed.

Can the selector lever be shifted to any other position?

YES >> INSPECTION END
NO >> Go to TM-219, "WITH ICC : Diagnosis Procedure".

WITH ICC : Diagnosis Procedure

INFOID:0000000006207773

1.CHECK POWER SOURCE (PART 1)

1. Turn ignition switch OFF.
2. Disconnect shift lock relay.
3. Check voltage between shift lock relay vehicle side harness connector terminal and ground.

Shift lock relay vehicle side harness connector		Ground	Condition	Voltage (Approx.)
Connector	Terminal			
E52	2		Depressed brake pedal.	Battery voltage
			Released brake pedal.	0 V

Is the inspection result normal?

YES >> GO TO 2.
NO >> GO TO 10.

2.CHECK GROUND CIRCUIT (PART 1)

Check continuity between shift lock relay vehicle side harness connector terminal and ground.

Shift lock relay vehicle side harness connector		Ground	Continuity
Connector	Terminal		
E52	1		Existed

Is the inspection result normal?

YES >> GO TO 3.
NO >> Repair or replace damaged parts.

3.CHECK SHIFT LOCK RELAY

Check shift lock relay. Refer to TM-223, "WITH ICC : Component Inspection (Shift Lock Relay)".

Is the inspection result normal?

YES >> GO TO 4.
NO >> Repair or replace damaged parts.

4.CHECK POWER SOURCE (PART 2)

1. Turn ignition switch ON.
2. Check voltage between shift lock relay vehicle side harness connector terminal and ground.

Shift lock relay vehicle side harness connector		Ground	Voltage (Approx.)
Connector	Terminal		
E52	5		Battery voltage

Is the inspection result normal?

YES >> GO TO 5.
NO >> GO TO 20.

5.CHECK HARNESS BETWEEN SHIFT LOCK RELAY AND A/T SHIFT SELECTOR (PART 1)

1. Turn ignition switch OFF.
2. Disconnect A/T shift selector connector.
3. Check continuity between shift lock relay vehicle side harness connector terminal and A/T shift selector vehicle side harness connector terminal

Shift lock relay vehicle side harness connector		A/T shift selector vehicle side harness connector		Continuity
Connector	Terminal	Connector	Terminal	
E52	3	M137	8	Existed

Is the inspection result normal?

YES >> GO TO 6.
NO >> Repair or replace damaged parts.

6. CHECK HARNESS BETWEEN SHIFT LOCK RELAY AND A/T SHIFT SELECTOR (PART 2)

Check continuity between shift lock relay vehicle side harness connector terminal and ground.

Shift lock relay vehicle side harness connector		Ground	Continuity
Connector	Terminal		
E52	3		Not existed

Is the inspection result normal?

YES >> GO TO 7.
NO >> Repair or replace damaged parts.

7. CHECK GROUND CIRCUIT (PART 2)

Check continuity between A/T shift selector vehicle side harness connector terminal and ground.

A/T shift selector vehicle side harness connector		Ground	Continuity
Connector	Terminal		
M137	4		Existed

Is the inspection result normal?

YES >> GO TO 8.
NO >> Repair or replace damaged parts.

8. CHECK HARNESS BETWEEN A/T SHIFT SELECTOR AND SHIFT LOCK UNIT

1. Disconnect shift lock unit connector.
2. Check continuity between A/T shift selector connector terminals and shift lock unit A/T shift selector side connector terminals.

A/T shift selector connector		Shift lock unit A/T shift selector side connector		Continuity
Connector	Terminal	Connector	Terminal	
M137	8	M222	3	Existed
	4		4	

Is the inspection result normal?

YES >> GO TO 9.
NO >> Repair or replace damaged parts.

9. CHECK SHIFT LOCK UNIT

1. Remove shift lock unit. Refer to TM-276, "2WD : Exploded View" (2WD) or TM-278, "AWD : Exploded View" (AWD).
2. Check shift lock unit. Refer to TM-223, "WITH ICC : Component Inspection (Shift Lock Solenoid)".

Is the inspection result normal?

YES >> Check intermittent incident. Refer to GI-43, "Intermittent Incident".
NO >> Replace shift lock unit. Refer to TM-276, "2WD : Exploded View" (2WD) or TM-278, "AWD : Exploded View" (AWD).

10. CHECK POWER SOURCE (PART 3)

1. Disconnect stop lamp switch connector.
2. Check voltage between stop lamp switch vehicle side harness connector terminal and ground.

Stop lamp switch vehicle side harness connector		Ground	Voltage (Approx.)
Connector	Terminal		
E110	1		Battery voltage

Is the inspection result normal?

YES >> GO TO 15.
NO >> GO TO 11.

11. CHECK HARNESS BETWEEN FUSE BLOCK (J/B) AND STOP LAMP SWITCH (PART 1)

1. Disconnect fuse block (J/B) connector.
2. Check continuity between fuse block (J/B) vehicle side harness connector terminal and stop lamp switch vehicle side harness connector terminal.

Fuse block (J/B) vehicle side harness connector		Stop lamp switch vehicle side harness connector		Continuity
Connector	Terminal	Connector	Terminal	
E103	8F	E110	1	Existed

Is the inspection result normal?

YES >> GO TO 12.
NO >> Repair or replace damaged parts.

12. CHECK HARNESS BETWEEN FUSE BLOCK (J/B) AND STOP LAMP SWITCH (PART 2)

Check continuity between fuse block (J/B) vehicle side harness connector terminal and ground.

Fuse block (J/B) vehicle side harness connector		Ground	Continuity
Connector	Terminal		
E103	8F		Not existed

Is the inspection result normal?

YES >> GO TO 13.
NO >> Repair or replace damaged parts.

13. DETECT MALFUNCTIONING ITEM (PART 1)

Check the following.

- Harness for short or open between battery and fuse block (J/B). Refer to PG-6, "Wiring Diagram - BATTERY POWER SUPPLY -".
- Battery
- 10A fuse [No.7, located in the fuse block (J/B)]. Refer to PG-125, "Fuse, Connector and Terminal Arrangement".
- Fuse block (J/B)

Is the inspection result normal?

YES >> GO TO 14.
NO >> Repair or replace damaged parts.

14. CHECK DTC OF ICC

With CONSULT-III
Perform “Self Diagnostic Results” in “ICC”.

Is any malfunction detected?

YES >> Check the DTC detected item. Refer to CCS-107, "DTC Index".
NO >> Check intermittent incident. Refer to GI-43, "Intermittent Incident".

15. CHECK STOP LAMP SWITCH (PART 1)

Check stop lamp switch. Refer to TM-224, "WITH ICC : Component Inspection (Stop Lamp Switch)".

Is the inspection result normal?

YES >> GO TO 18.
NO >> GO TO 16.

16. CHECK INSTALLATION POSITION OF STOP LAMP SWITCH

Adjust stop lamp switch position. Refer to BR-7, "Inspection and Adjustment".

>> GO TO 17.

17. CHECK STOP LAMP SWITCH (PART 2)

Check stop lamp switch. Refer to TM-224, "WITH ICC : Component Inspection (Stop Lamp Switch)".

Is the inspection result normal?

YES >> INSPECTION END
NO >> Replace stop lamp switch. Refer to BR-18, "Exploded View".

18. CHECK HARNESS BETWEEN STOP LAMP SWITCH AND SHIFT LOCK RELAY (PART 1)

Check continuity between stop lamp switch vehicle side harness connector terminal and shift lock relay vehicle side harness connector terminal.

Stop lamp switch vehicle side harness connector		Shift lock relay vehicle side harness connector		Continuity
Connector	Terminal	Connector	Terminal	
E110	2	E52	2	Existed

Is the inspection result normal?

YES >> GO TO 19.
NO >> Repair or replace damaged parts.

19. CHECK HARNESS BETWEEN STOP LAMP SWITCH AND SHIFT LOCK RELAY (PART 2)

Check continuity between stop lamp switch vehicle side harness connector terminal and ground.

Stop lamp switch vehicle side harness connector		Ground	Continuity
Connector	Terminal		
E110	4		Not existed

Is the inspection result normal?

YES >> GO TO 14.
NO >> Repair or replace damaged parts.

20. CHECK HARNESS BETWEEN FUSE BLOCK (J/B) AND SHIFT LOCK RELAY (PART 1)

1. Turn ignition switch OFF.
2. Disconnect fuse block (J/B) connector.
3. Check continuity between fuse block (J/B) vehicle side harness connector terminal and shift lock relay vehicle side harness connector terminal.

Fuse block (J/B) vehicle side harness connector		Shift lock relay vehicle side harness connector		Continuity
Connector	Terminal	Connector	Terminal	
E103	4F	E52	5	Existed

Is the inspection result normal?

YES >> GO TO 21.
NO >> Repair or replace damaged parts.

21. CHECK HARNESS BETWEEN FUSE BLOCK (J/B) AND SHIFT LOCK RELAY (PART 2)

Check continuity between fuse block (J/B) vehicle side harness connector terminal and ground.

Fuse block (J/B) vehicle side harness connector		Ground	Continuity
Connector	Terminal		
E103	4F		Not existed

Is the inspection result normal?

YES >> GO TO 22.
NO >> Repair or replace damaged parts.

22. DETECT MALFUNCTIONING ITEM (PART 2)

Check the following.
- Harness for short or open between ignition switch and fuse block (J/B). Refer to PG-65, "Wiring Diagram - IGNITION POWER SUPPLY -".
- Ignition switch
- 10A fuse [No.3, located in the fuse block (J/B)]. Refer to PG-125, "Fuse, Connector and Terminal Arrangement".
- Fuse block (J/B)

Is the inspection result normal?

YES >> Check intermittent incident. Refer to GI-43, "Intermittent Incident".
NO >> Repair or replace damaged parts.

WITH ICC : Component Inspection (Shift Lock Solenoid)

INFOID:0000000006207774

1. CHECK SHIFT LOCK SOLENOID

Apply voltage to terminals 3 and 4 of shift lock unit connector, and then check that shift lock solenoid is activated.

CAUTION:
Connect the fuse between the terminals when applying the voltage.

Shift lock unit connector			Condition	Status
Connector	Terminal			
	+ (fuse)	–		
M222	3	4	Apply 12 V direct current between terminals 3 and 4.	Shift lock solenoid operates

Can the lock plate be moved up and down?

YES >> INSPECTION END
NO >> Replace shift lock unit. Refer to TM-276, "2WD : Exploded View" (2WD) or TM-278, "AWD : Exploded View" (AWD).

WITH ICC : Component Inspection (Shift Lock Relay)

INFOID:0000000006207775

1. CHECK SHIFT LOCK RELAY

Check continuity between shift lock relay terminals.

CAUTION:
Connect the fuse between the terminals when applying the voltage.

Shift lock relay connector			Condition	Continuity
Connector	Terminal			
E52	3	5	Apply 12 V direct current between terminals 1 and 2.	Existed
			OFF	Not existed

Is the inspection result normal?

YES >> INSPECTION END
NO >> Replace shift lock relay.

WITH ICC : Component Inspection (Stop Lamp Switch)

INFOID:0000000006207776

1.CHECK STOP LAMP SWITCH

Check continuity between stop lamp switch connector terminals.

Stop lamp switch connector			Condition	Continuity
Connector	Terminal			
E110	1	2	Brake pedal depressed	Existed
			Brake pedal released	Not existed

Is the inspection result normal?

YES >> INSPECTION END
NO >> Replace stop lamp switch. Refer to BR-18, "Exploded View".

WITHOUT ICC

WITHOUT ICC : Component Function Check

INFOID:0000000006207777

1.CHECK A/T SHIFT LOCK OPERATION (STEP 1)

1. Turn ignition switch ON.
2. Shift the selector lever to the “P” position.
3. Attempt to shift the selector lever to any other position with the brake pedal released.

Can the selector lever be shifted to any other position?

YES >> Go to TM-224, "WITHOUT ICC : Diagnosis Procedure".
NO >> GO TO 2.

2.CHECK A/T SHIFT LOCK OPERATION (STEP 2)

Attempt to shift the selector lever to any other position with the brake pedal depressed.

Can the selector lever be shifted to any other position?

YES >> INSPECTION END
NO >> Go to TM-224, "WITHOUT ICC : Diagnosis Procedure".

WITHOUT ICC : Diagnosis Procedure

INFOID:0000000006207778

1.CHECK POWER SOURCE (PART 1)

1. Turn ignition switch OFF.
2. Disconnect A/T shift selector connector.
3. Turn ignition switch ON.
4. Check voltage between A/T shift selector vehicle side harness connector terminal and ground.

A/T shift selector vehicle side harness connector		Ground	Condition	Voltage (Approx.)
Connector	Terminal			
M137	8		Depressed brake pedal.	Battery voltage
			Released brake pedal.	0 V

Is the inspection result normal?

YES >> GO TO 2.
NO >> GO TO 5.

2.CHECK GROUND CIRCUIT

Check continuity between A/T shift selector vehicle side harness connector terminal and ground.

A/T shift selector vehicle side harness connector		Ground	Continuity
Connector	Terminal		
M137	4		Existed

Is the inspection result normal?

YES >> GO TO 3.
NO >> Repair or replace damaged parts.

3. CHECK HARNESS BETWEEN A/T SHIFT SELECTOR AND SHIFT LOCK UNIT

1. Disconnect shift lock unit connector.
2. Check continuity between A/T shift selector connector terminals and shift lock unit A/T shift selector side connector terminals.

A/T shift selector connector		Shift lock unit A/T shift selector side connector		Continuity
Connector	Terminal	Connector	Terminal	
M137	8	M222	3	Existed
	4		4	

Is the inspection result normal?

YES >> GO TO 4.
NO >> Repair or replace damaged parts.

4. CHECK SHIFT LOCK UNIT

1. Remove shift lock unit. Refer to TM-276, "2WD : Exploded View" (2WD) or TM-278, "AWD : Exploded View" (AWD).
2. Check shift lock unit. Refer to TM-227, "WITHOUT ICC : Component Inspection (Shift Lock Solenoid)".

Is the inspection result normal?

YES >> Check intermittent incident. Refer to GI-43, "Intermittent Incident".
NO >> Replace shift lock unit. Refer to TM-276, "2WD : Exploded View" (2WD) or TM-278, "AWD : Exploded View" (AWD).

5. CHECK POWER SOURCE (PART 2)

1. Turn ignition switch OFF.
2. Disconnect stop lamp switch connector.
3. Turn ignition switch ON.
4. Check voltage between stop lamp switch vehicle side harness connector terminal and ground.

Stop lamp switch vehicle side harness connector		Ground	Voltage (Approx.)
Connector	Terminal		
E119	3		Battery voltage

Is the inspection result normal?

YES >> GO TO 6.
NO >> GO TO 9.

6. CHECK STOP LAMP SWITCH (PART 1)

Check stop lamp switch. Refer to TM-227, "WITHOUT ICC : Component Inspection (Stop Lamp Switch)".

Is the inspection result normal?

YES >> GO TO 7.
NO >> GO TO 12.

7. CHECK HARNESS BETWEEN STOP LAMP SWITCH AND SHIFT SELECTOR (PART 1)

Check continuity between stop lamp switch vehicle side harness connector terminal and A/T shift selector vehicle side harness connector terminal.

Stop lamp switch vehicle side harness connector		A/T shift selector vehicle side harness connector		Continuity
Connector	Terminal	Connector	Terminal	
E119	4	M137	8	Existed

Is the inspection result normal?

YES >> GO TO 8.
NO >> Repair or replace damaged parts.

8. CHECK HARNESS BETWEEN STOP LAMP SWITCH AND SHIFT SELECTOR (PART 2)

Check continuity between stop lamp switch vehicle side harness connector terminal and ground.

Stop lamp switch vehicle side harness connector		Ground	Continuity
Connector	Terminal		
E119	4		Not existed

Is the inspection result normal?

YES >> Check intermittent incident. Refer to GI-43, "Intermittent Incident".
NO >> Repair or replace damaged parts.

9. CHECK HARNESS BETWEEN FUSE BLOCK (J/B) AND STOP LAMP SWITCH (PART 1)

1. Turn ignition switch OFF.
2. Disconnect fuse block (J/B) connector.
3. Check continuity between fuse block (J/B) vehicle side harness connector terminal and stop lamp switch vehicle side harness connector terminal.

Fuse block (J/B) vehicle side harness connector		Stop lamp switch vehicle side harness connector		Continuity
Connector	Terminal	Connector	Terminal	
E103	4F	E119	3	Existed

Is the inspection result normal?

YES >> GO TO 10.
NO >> Repair or replace damaged parts.

10. CHECK HARNESS BETWEEN FUSE BLOCK (J/B) AND STOP LAMP SWITCH (PART 2)

Check continuity between fuse block (J/B) vehicle side harness connector terminal and ground.

Fuse block (J/B) vehicle side harness connector		Ground	Continuity
Connector	Terminal		
E103	4F		Not existed

Is the inspection result normal?

YES >> GO TO 11.
NO >> Repair or replace damaged parts.

11. DETECT MALFUNCTIONING ITEM

Check the following.

- Harness for short or open between ignition switch and fuse block (J/B). Refer to PG-65, "Wiring Diagram - IGNITION POWER SUPPLY -".
- Ignition switch
- 10A fuse [No.3, located in the fuse block (J/B)]. Refer to PG-125, "Fuse, Connector and Terminal Arrangement".
- Fuse block (J/B)

Is the inspection result normal?

YES >> Check intermittent incident. Refer to GI-43, "Intermittent Incident".
NO >> Repair or replace damaged parts.

12. CHECK INSTALLATION POSITION OF STOP LAMP SWITCH

Adjust stop lamp switch position. Refer to BR-7, "Inspection and Adjustment".

>> GO TO 13.

13. CHECK STOP LAMP SWITCH (PART 2)

Check stop lamp switch. Refer to TM-227, "WITHOUT ICC : Component Inspection (Stop Lamp Switch)".

Is the inspection result normal?

YES >> INSPECTION END

NO >> Replace stop lamp switch. Refer to BR-18, "Exploded View".

WITHOUT ICC : Component Inspection (Shift Lock Solenoid)

INFOID:0000000006207779

1.CHECK SHIFT LOCK SOLENOID

Apply voltage to terminals 3 and 4 of shift lock unit connector, and then check that shift lock solenoid is activated.

CAUTION:

Connect the fuse between the terminals when applying the voltage.

Shift lock unit connector			Condition	Status
Connector	Terminal			
	+ (fuse)	–		
M222	3	4	Apply 12 V direct current between terminals 3 and 4.	Shift lock solenoid operates

Can the lock plate be moved up and down?

YES >> INSPECTION END

NO >> Replace shift lock unit. Refer to TM-276, "2WD : Exploded View" (2WD) or TM-278, "AWD : Exploded View" (AWD).

WITHOUT ICC : Component Inspection (Stop Lamp Switch)

INFOID:0000000006207780

1.CHECK STOP LAMP SWITCH

Check continuity between stop lamp switch connector terminals.

Stop lamp switch connector			Condition	Continuity
Connector	Terminal			
E119	3	4	Brake pedal depressed	Existed
			Brake pedal released	Not existed

Is the inspection result normal?

YES >> INSPECTION END

NO >> Replace stop lamp switch. Refer to BR-18, "Exploded View".

SELECTOR LEVER POSITION INDICATOR

Description

INFOID:0000000006207781

Indicates selector lever position.

Component Function Check

INFOID:0000000006207782

1.CHECK SELECTOR LEVER POSITION INDICATOR (PART 1)

1. Turn ignition switch ON.
2. Check that each position indicator lamp of the selector lever position indicator turns on when shifting the selector lever from “P” to “M” position.

Is the inspection result normal?

YES >> GO TO 2.
NO >> Go to TM-228, "Diagnosis Procedure".

2.CHECK SELECTOR LEVER POSITION INDICATOR (PART 2)

Check that the night illumination of the selector lever position indicator turns on when setting the lighting switch in 1st position.

Is the inspection result normal?

YES >> INSPECTION END
NO >> Go to TM-228, "Diagnosis Procedure".

Diagnosis Procedure

INFOID:0000000006207783

1.CHECK MALFUNCTIONING ITEM

Which item is abnormal?

Position indicator lamp>> GO TO 2.
Illumination lamp>> GO TO 9.

2.CHECK POWER SOURCE (PART 1)

1. Turn ignition switch OFF.
2. Disconnect A/T shift selector connector.
3. Turn ignition switch ON.
4. Check voltage between A/T shift selector vehicle side harness connector terminal and ground.

A/T shift selector vehicle side harness connector		Ground	Voltage (Approx.)
Connector	Terminal		
M137	10		Battery voltage

Is the inspection result normal?

YES >> GO TO 3.
NO >> GO TO 6.

3.CHECK GROUND CIRCUIT

1. Turn ignition switch OFF.
2. Check continuity between A/T shift selector vehicle side harness connector terminal and ground.

A/T shift selector vehicle side harness connector		Ground	Continuity
Connector	Terminal		
M137	4		Existed

Is the inspection result normal?

YES >> GO TO 4.
NO >> Repair or replace damaged parts.

4.CHECK SHIFT POSITION SWITCH (PART 1)

1. Disconnect selector lever position indicator side connector of shift position switch.
2. Check continuity between A/T shift selector connector terminals and shift position switch connector terminals (indicator side).

A/T shift selector connector		Shift position switch connector (indicator side)		Condition	Continuity
Connector	Terminal	Connector	Terminal		
M137	4	M221	7	Selector lever in “D” position.	Existed
			2, 3, 4, 5, 6, 9, 10, 11		Not existed
			9	Selector lever in “M” position.	Existed
			2, 3, 4, 5, 6, 7, 10, 11		Not existed
	10		2, 6	Selector lever in “N” and “M” positions.	Existed
			3, 4, 5, 7, 9, 10, 11		Not existed
			3, 6	Selector lever in “D” position.	Existed
			2, 4, 5, 7, 9, 10, 11		Not existed
			4, 6	Selector lever in “R” position.	Existed
			2, 3, 5, 7, 9, 10, 11		Not existed
			5, 6	Selector lever in “P” position.	Existed
			2, 3, 4, 7, 9, 10, 11		Not existed

Is the inspection result normal?

YES >> GO TO 5.
NO >> Repair or replace damaged parts.

5. CHECK SELECTOR LEVER POSITION INDICATOR

Check selector lever position indicator. Refer to TM-230, "Component Inspection (Selector Lever Position Indicator)".

Is the inspection result normal?

YES >> Check intermittent incident. Refer to GI-43, "Intermittent Incident".
NO >> Replace damaged parts.

6. CHECK HARNESS BETWEEN A/T SHIFT SELECTOR AND BCM (PART 1)

1. Turn ignition switch OFF.
2. Disconnect BCM connector.
3. Check continuity between A/T shift selector vehicle side harness connector terminal and BCM vehicle side harness connector terminal.

A/T shift selector vehicle side harness connector		BCM vehicle side harness connector		Continuity
Connector	Terminal	Connector	Terminal	
M137	10	M122	96	Existed

Is the inspection result normal?

YES >> GO TO 7.
NO >> Repair or replace damaged parts.

7. CHECK HARNESS BETWEEN A/T SHIFT SELECTOR AND BCM (PART 2)

Check continuity between A/T shift selector vehicle side harness connector terminal and ground.

A/T shift selector vehicle side harness connector		Ground	Continuity
Connector	Terminal		
M137	10		Not existed

Is the inspection result normal?

YES >> GO TO 8.
NO >> Repair or replace damaged parts.

8.CHECK BCM INPUT/OUTPUT SIGNAL

Check BCM input/output signal. Refer to BCS-43, "Reference Value".

Is the inspection result normal?

YES >> Check intermittent incident. Refer to GI-43, "Intermittent Incident".
NO >> Repair or replace damaged parts.

9.CHECK POWER SOURCE (PART 2)

1. Turn ignition switch OFF.
2. Disconnect A/T shift selector connector.
3. Turn ignition switch ON.
4. Check voltage between A/T shift selector vehicle side harness connector terminals.

A/T shift selector vehicle side harness connector			Condition	Voltage (Approx.)
Connector	Terminal			
	+	–		
M137	7	9	Lighting switch 1ST	Battery voltage

Is the inspection result normal?

YES >> GO TO 10.
NO >> Check illumination circuit. Refer to INL-41, "Wiring Diagram - ILLUMINATION -".

10.CHECK SHIFT POSITION SWITCH (PART 2)

1. Disconnect selector lever position indicator side connector of shift position switch.
2. Check continuity between A/T shift selector connector terminals and shift position switch connector terminals (indicator side).

A/T shift selector connector		Shift position switch connector (indicator side)		Continuity
Connector	Terminal	Connector	Terminal	
M137	7	M221	10	Existed
			2, 3, 4, 5, 6, 7, 9, 11	Not existed
	9		11	Existed
			2, 3, 4, 5, 6, 7, 9, 10	Not existed

Is the inspection result normal?

YES >> GO TO 5.
NO >> Repair or replace damaged parts.

Component Inspection (Selector Lever Position Indicator)

INFOID:0000000006207784

1.CHECK SELECTOR LEVER POSITION INDICATOR

Check that selector lever position indicator lamps turn on.

CAUTION:
Connect the fuse between the terminals when applying the voltage.

Shift position switch connector (indicator side)			Condition	Status
Connector	Terminal			
	+ (fuse)	–		
M221	2	7	Apply 12 V direct current between terminals 2 and 7.	“N” position indicator lamp turns on.
	3		Apply 12 V direct current between terminals 3 and 7.	“D” position indicator lamp turns on.
	4		Apply 12 V direct current between terminals 4 and 7.	“R” position indicator lamp turns on.
	5		Apply 12 V direct current between terminals 5 and 7.	“P” position indicator lamp turns on.
	6	9	Apply 12 V direct current between terminals 6 and 9.	“M” mode indicator lamp turns on.
	10	11	Apply 12 V direct current between terminals 10 and 11.	Illumination lamp turns on.

Is the inspection result normal?

YES >> INSPECTION END
NO >> Replace the selector lever position indicator. Refer to TM-281, "Removal and Installation".

ECU DIAGNOSIS INFORMATION

TCM

Reference Value

INFOID:0000000006207785

VALUES ON DIAGNOSIS TOOL

NOTE:

1. The CONSULT-III electrically displays shift timing and lock-up timing (that is, operation timing of each solenoid).
   Check for time difference between actual shift timing and the CONSULT-III display. If the difference is noticeable, mechanical parts (except solenoids, sensors, etc.) may be malfunctioning. Check mechanical parts in accordance with the specified diagnostic procedures.
2. Shift schedule (that implies gear position) on CONSULT-III may slightly differ from that is described in Service Manual. This occurs because of the reasons as per the following:

- Actual shift schedule has more or less tolerance or allowance
- Shift schedule in Service Manual refers to the point where shifting starts
- Gear position on CONSULT-III indicates the point where shifting completes

3. Display of solenoid valves on CONSULT-III changes at the start of shifting, while gear position is displayed upon completion of shifting (which is computed by TCM).

CONSULT-III MONITOR ITEM

Item name	Condition	Value / Status (Approx.)
VHCL/S SE-A/T	During driving	Approximately equals the speedometer reading.
ESTM VSP SIG	During driving	Approximately equals the speedometer reading.
OUTPUT REV	During driving (lock-up ON)	Tachometer / Gear ratio
INPUT SPEED	During driving (lock-up ON)	Approximately equals the engine speed.
F SUN GR REV	During driving	Revolution of front sun gear is indicated.
F CARR GR REV	During driving	Revolution of front carrier is indicated.
ENGINE SPEED	Engine running	Closely equals the tachometer reading.
TC SLIP SPEED	During driving	Engine speed – Input speed
ACCELE POSI	Accelerator pedal is released	0.0/8
	Accelerator pedal is fully depressed	8.0/8
THROTTLE POSI	Accelerator pedal is released	0.0/8
	Accelerator pedal is fully depressed	8.0/8
ATF TEMP 1	Ignition switch ON	Temperature of ATF in the oil pan is indicated.
ATF TEMP 2	Ignition switch ON	Temperature of ATF at the exit of torque converter.
ATF TEMP SE 1	0°C (32° F) – 20°C (68°F) – 80°C (176°F)	3.3 – 2.7 – 0.9 V
BATTERY VOLT	Ignition switch ON	Battery voltage (11 V – 14 V)
LINE PRES SOL	During driving	0.2 – 0.6 A
TCC SOLENOID	Slip lock-up is active	0.2 – 0.8 A
	Lock-up is active	0.8 A
	Other than the above	0 A
L/B SOLENOID	Low brake is engaged	0.6 – 0.8 A
	Low brake is disengaged	0 – 0.05 A

Item name	Condition	Value / Status (Approx.)
FR/B SOLENOID	Front brake is engaged	0.6 – 0.8 A
	Front brake is disengaged	0 – 0.05 A
HLR/C SOL	High and low reverse clutch is disengaged	0.6 – 0.8 A
	High and low reverse clutch is engaged	0 – 0.05 A
I/C SOLENOID	Input clutch is disengaged	0.6 – 0.8 A
	Input clutch is engaged	0 – 0.05 A
D/C SOLENOID	Direct clutch is disengaged	0.6 – 0.8 A
	Direct clutch is engaged	0 – 0.05 A
2346/B SOL	2346 brake is engaged	0.6 – 0.8 A
	2346 brake is disengaged	0 – 0.05 A
L/P SOL MON	During driving	0.2 – 0.6 A
TCC SOL MON	Slip lock-up is active	0.2 – 0.8 A
	Lock-up is active	0.8 A
	Other than the above	0 A
L/B SOL MON	Low brake is engaged	0.6 – 0.8 A
	Low brake is disengaged	0 – 0.05 A
FR/B SOL MON	Front brake is engaged	0.6 – 0.8 A
	Front brake is disengaged	0 – 0.05 A
HLR/C SOL MON	High and low reverse clutch is disengaged	0.6 – 0.8 A
	High and low reverse clutch is engaged	0 – 0.05 A
I/C SOL MON	Input clutch is disengaged	0.6 – 0.8 A
	Input clutch is engaged	0 – 0.05 A
D/C SOL MON	Direct clutch is disengaged	0.6 – 0.8 A
	Direct clutch is engaged	0 – 0.05 A
2346/B SOL MON	2346 brake is engaged	0.6 – 0.8 A
	2346 brake is disengaged	0 – 0.05 A
GEAR RATIO	Driving with 1GR	4.924
	Driving with 2GR	3.194
	Driving with 3GR	2.043
	Driving with 4GR	1.412
	Driving with 5GR	1.000
	Driving with 6GR	0.862
	Driving with 7GR	0.772
ENGINE TORQUE	During driving	Changes the value according to the acceleration or deceleration.
ENG TORQUE D	During driving	Changes the value according to the acceleration or deceleration.
INPUT TRQ S	During driving	Changes the value according to the acceleration or deceleration.
INPUT TRQ L/P	During driving	Changes the value according to the acceleration or deceleration.
TRGT PRES L/P	Selector lever in “P” and “N” positions	490 kPa
	Other than the above	490 – 1370 kPa
TRGT PRES TCC	Slip lock-up is active	0 – 600 kPa
	Lock-up is active	600 kPa
	Other than the above	0 kPa

Item name	Condition	Value / Status (Approx.)
TRGT PRES L/B	Low brake is engaged	1370 kPa
	Low brake is disengaged	0 kPa
TRGT PRES FR/B	Front brake is engaged	1370 kPa
	Front brake is disengaged	0 kPa
TRG PRE HLR/C	High and low reverse clutch is disengaged	1370 kPa
	High and low reverse clutch is engaged	0 kPa
TRGT PRES I/C	Input clutch is disengaged	1370 kPa
	Input clutch is engaged	0 kPa
TRGT PRES D/C	Direct clutch is disengaged	1370 kPa
	Direct clutch is engaged	0 kPa
TRG PRE 2346/B	2346 brake is engaged	1370 kPa
	2346 brake is disengaged	0 kPa
SHIFT PATTERN	During normal driving (without shift changes)	FF
VEHICLE SPEED	During driving	Approximately equals the speed-ometer reading.
RANGE SW 4	Selector lever in “P” and “N” positions	ON
	Other than the above	OFF
RANGE SW 3	Selector lever in “P”, “R” and “N” positions	ON
	Other than the above	OFF
RANGE SW 2	Selector lever in “P” and “R” positions	ON
	Other than the above	OFF
RANGE SW 1	Selector lever in “P” position	ON
	Other than the above	OFF
SFT DWN ST SW	Paddle shifter (shift-down) is pulled.	ON
	Other than the above	OFF
SFT UP ST SW	Paddle shifter (shift-up) is pulled.	ON
	Other than the above	OFF
DOWN SW LEVER	Selector lever is shifted to – side	ON
	Other than the above	OFF
UP SW LEVER	Selector lever is shifted to + side	ON
	Other than the above	OFF
NON M-MODE SW	Selector lever is shifted to manual shift gate side	OFF
	Other than the above	ON
MANU MODE SW	Selector lever is shifted to manual shift gate side	ON
	Other than the above	OFF
DS RANGE	Driving with DS mode	ON
	Other than the above	OFF
1 POSITION SW*	Selector lever in “1” position	ON
	Other than the above	OFF
OD CONT SW*	When overdrive control switch is depressed	ON
	When overdrive control switch is released	OFF
BRAKESW	Brake pedal is depressed	ON
	Brake pedal is released	OFF
POWERSHIFT SW*	Power mode	ON
	Other than the above	OFF

Item name	Condition	Value / Status (Approx.)
ASCD-OD CUT	When TCM receives ASCD OD cancel request signal	ON
	Other than the above	OFF
ASCD-CRUISE	ASCD operate	ON
	Other than the above	OFF
ABS SIGNAL	ABS operate	ON
	Other than the above	OFF
TCS GR/P KEEP	When TCM receives TCS gear keep request signal	ON
	Other than the above	OFF
TCS SIGNAL 2	When the reception value of A/T shift schedule change demand signal is “cold”	ON
	Other than the above	OFF
TCS SIGNAL 1	When the reception value of A/T shift schedule change demand signal is “warm”	ON
	Other than the above	OFF
LOW/B PARTS	At 4 - 5 - 6 gear shift control	FAIL
	Other than the above	NOTFAIL
HC/IC/FRB PARTS	At 1 - 2 - 3 gear shift control	FAIL
	Other than the above	NOTFAIL
IC/FRB PARTS	At 4 - 5 - 6 gear shift control	FAIL
	Other than the above	NOTFAIL
HLR/C PARTS	At 4 - 5 - 6 gear shift control	FAIL
	Other than the above	NOTFAIL
W/O THL POS	Accelerator pedal is fully depressed	ON
	Accelerator pedal is released	OFF
CLSD THL POS	Accelerator pedal is released	ON
	Accelerator pedal is fully depressed	OFF
DRV CST JUDGE	Accelerator pedal is depressed	DRIVE
	Accelerator pedal is released	COAST

Item name	Condition	Value / Status (Approx.)
SHIFT IND SIGNAL	When the selector lever is positioned in between each position.	OFF
	Selector lever in “P” position	P
	Selector lever in “R” position	R
	Selector lever in “N” position	N
	Selector lever in “D” position	D
	Selector lever in “D” position: 7GR	
	Selector lever in “D” position: 6GR	6
	Selector lever in “D” position: 5GR	5
	Selector lever in “D” position: 4GR	4
	Selector lever in “D” position: 3GR	3
	Selector lever in “D” position: 2GR	2
	Selector lever in “D” position: 1GR	1
	Selector lever in “M” position: 1GR	M1
	Selector lever in “M” position: 2GR	M2
	Selector lever in “M” position: 3GR	M3
	Selector lever in “M” position: 4GR	M4
	Selector lever in “M” position: 5GR	M5
	Selector lever in “M” position: 6GR	M6
	Selector lever in “M” position: 7GR	M7
	Driving with DS mode	DS
STARTER RELAY	Selector lever in “P” and “N” positions	ON
	Other than the above	OFF
F-SAFE IND/L	For 2 seconds after the ignition switch is turned ON	ON
	Other than the above	OFF
ATF WARN LAMP*	When TCM transmits the ATF indicator lamp signal	ON
	Other than the above	OFF
MANU MODE IND	Driving with manual mode	ON
	Other than the above	OFF
ON OFF SOL MON	Selector lever in “P” and “N” positions	ON
	Driving with 1GR to 3GR	
	Other than the above	OFF
START RLY MON	Selector lever in “P” and “N” positions	ON
	Other than the above	OFF
ON OFF SOL	Selector lever in “P” and “N” positions	ON
	Driving with 1GR to 3GR	
	Other than the above	OFF

Item name	Condition	Value / Status (Approx.)
SLCT LVR POSI	Selector lever in “N” and “P” positions	N/P
	Selector lever in “R” position	R
	Selector lever in “D” and “DS” positions	D
	Selector lever in “M” position: 7GR	
	Selector lever in “M” position: 6GR	6
	Selector lever in “M” position: 5GR	5
	Selector lever in “M” position: 4GR	4
	Selector lever in “M” position: 3GR	3
	Selector lever in “M” position: 2GR	2
	Selector lever in “M” position: 1GR	1
GEAR	During driving	1st, 2nd, 3rd, 4th, 5th, 6th, 7th
NEXT GR POSI	During driving	1st, 2nd, 3rd, 4th, 5th, 6th, 7th
SHIFT MODE	Driving with the D position	0 or 3
	Driving with the manual mode	4 or 8
D/C PARTS	At 1 - 2 gear shift control	FAIL
	Other than the above	NOTFAIL
FR/B PARTS	At control fixed to 1GR	FAIL
	Other than the above	NOTFAIL
2346/B PARTS	At control fixed to 1GR	FAIL
	Other than the above	NOTFAIL
2346B/DC PARTS	At 2 - 3 - 4 gear shift control	FAIL
	Other than the above	NOTFAIL

*: Not mounted but always display as OFF

TERMINAL LAYOUT

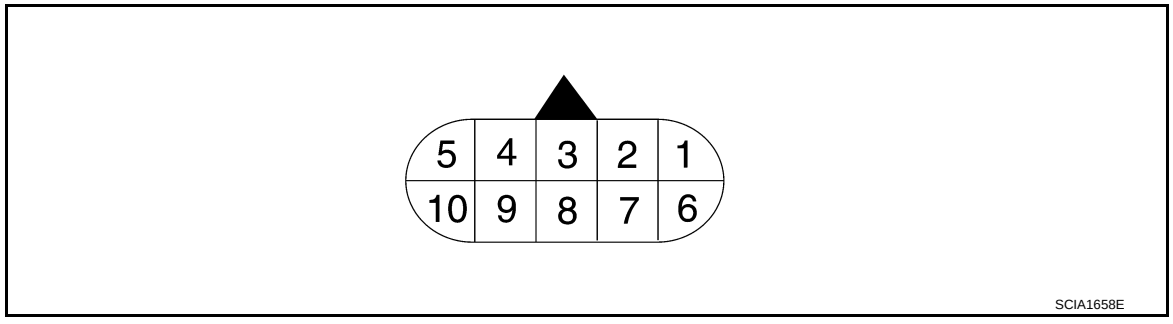

PHYSICAL VALUES

Terminal (Wire color)		Description		Condition	Value (Approx.)
+	–	Signal name	Input/ Output		
1 (Y)	Ground	Power supply	Input	Ignition switch ON	Battery voltage
				Ignition switch OFF	0 V
2 (BR)*1 (R)*2	Ground	Power supply (Memory back-up)	Input	Always	Battery voltage
3 (L)	—	CAN-H	Input/ Output	—	—

Terminal (Wire color)		Description		Condition		Value (Approx.)
+	–	Signal name	Input/ Output			
4 (V)	—	K-line	Input/ Output	—		—
5 (B)	Ground	Ground	Output	Always		0 V
6 (Y)*1 (G)*2	Ground	Power supply	Input	Ignition switch ON		Battery voltage
				Ignition switch OFF		0 V
7 (R)	Ground	Back-up lamp relay	Input	Ignition switch ON	Selector lever in “R” position.	0 V
					Selector lever in other than above.	Battery voltage
8 (P)	—	CAN-L	Input/ Output	—		—
9 (GR)	Ground	Starter relay	Output	Ignition switch ON	Selector lever in “N” and “P” positions.	Battery voltage
					Selector lever in other than above.	0 V
10 (B)	Ground	Ground	Output	Always		0 V

*1: VQ25HR models
*2: VQ37VHR models

Wiring Diagram - A/T CONTROL SYSTEM -

INFOID:0000000006207786

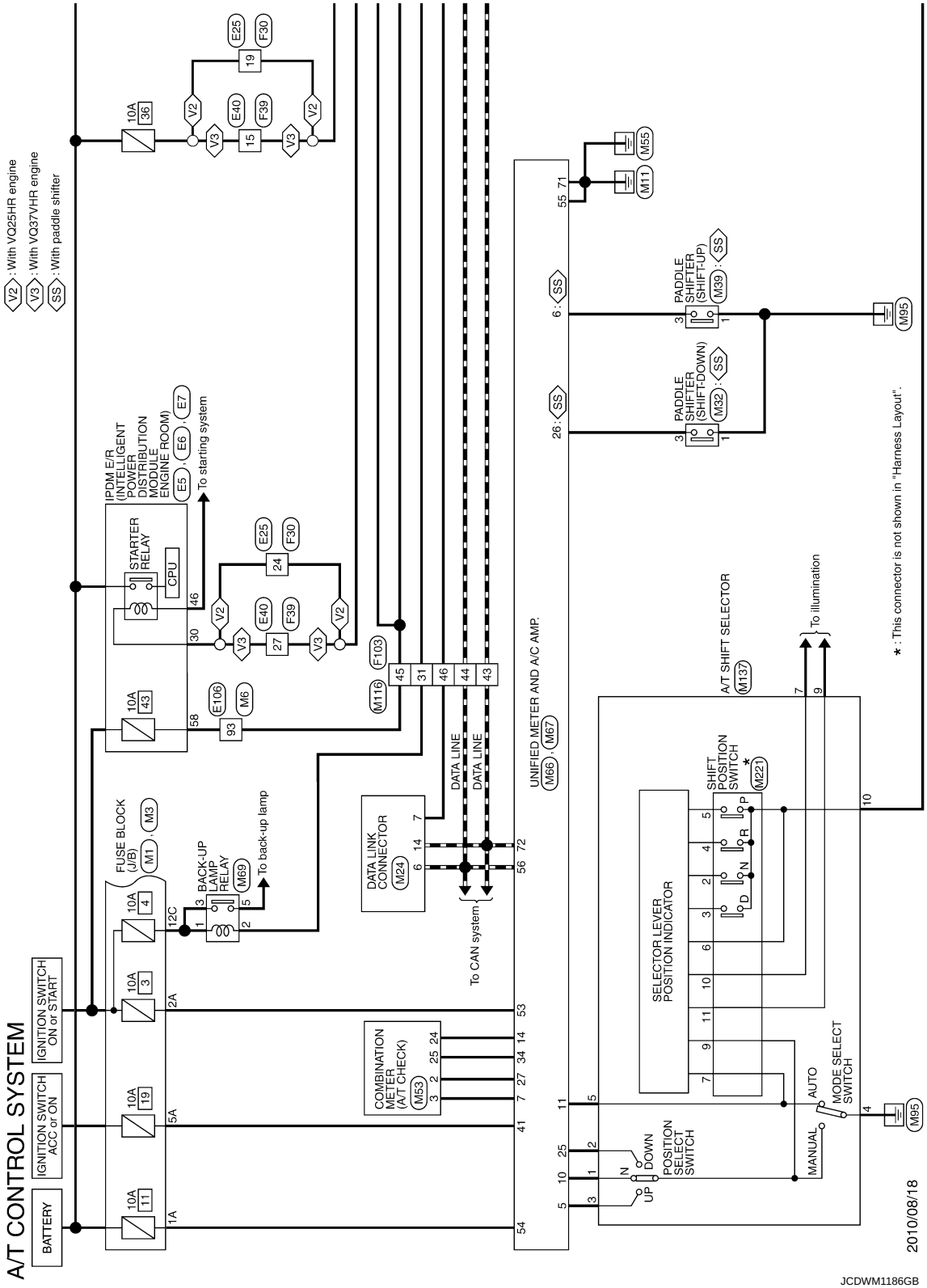

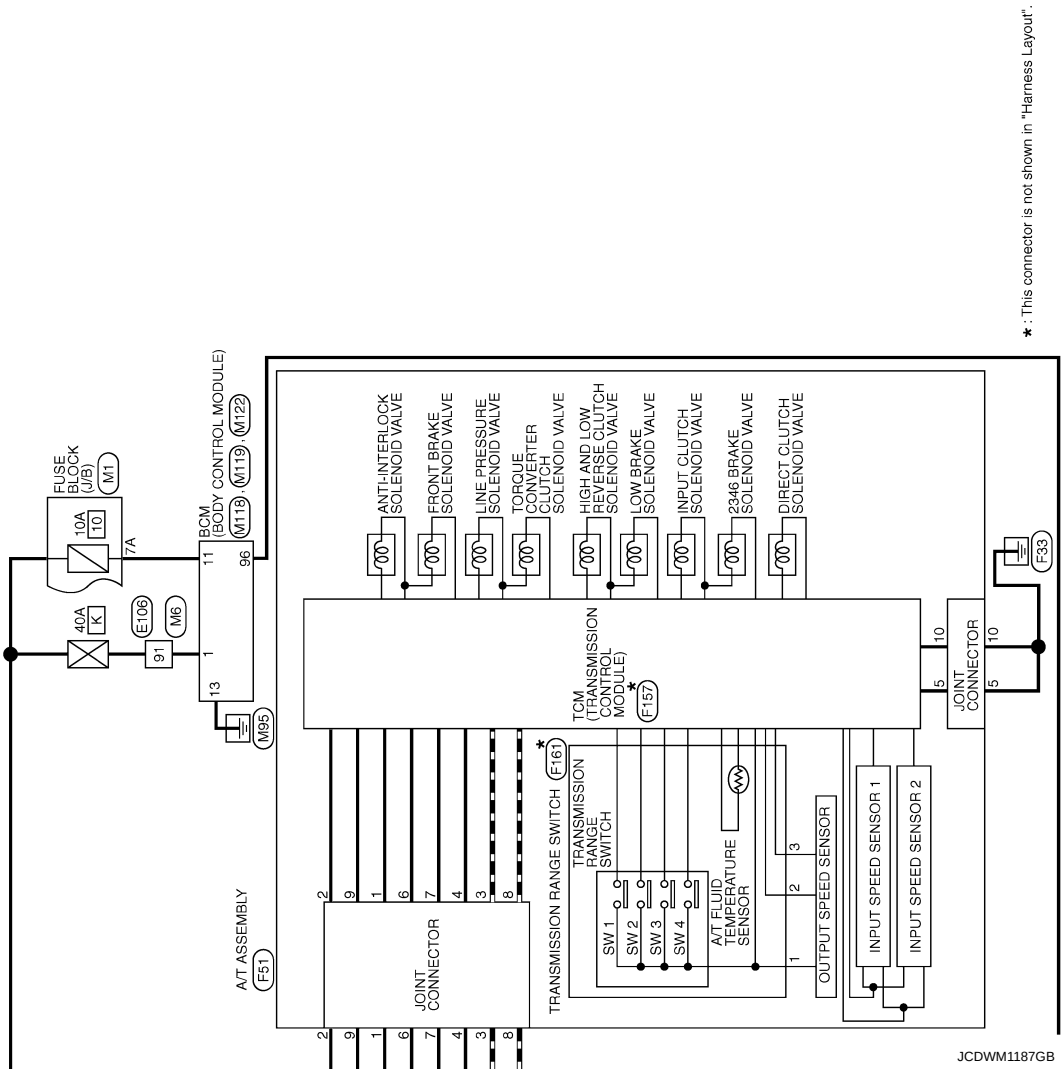
★: This connector is not shown in "Harness Layout".
FUSE BLOCK (J/B) M1
10A 10
7A
40A K
E106
M6
91
BCM (BODY CONTROL MODULE) M118, M119, M122
11
96
1
13
M95
ANTI-INTERLOCK SOLENOID VALVE
FRONT BRAKE SOLENOID VALVE
LINE PRESSURE SOLENOID VALVE
TORQUE CONVERTER CLUTCH SOLENOID VALVE
HIGH AND LOW REVERSE CLUTCH SOLENOID VALVE
LOW BRAKE SOLENOID VALVE
INPUT CLUTCH SOLENOID VALVE
2346 BRAKE SOLENOID VALVE
DIRECT CLUTCH SOLENOID VALVE
TCM (TRANSMISSION CONTROL MODULE) ★F157
JOINT CONNECTOR
10
5
F33
TRANSMISSION RANGE SWITCH ★F161
TRANSMISSION RANGE SWITCH
SW 1
SW 2
SW 3
SW 4
A/T FLUID TEMPERATURE SENSOR
OUTPUT SPEED SENSOR
INPUT SPEED SENSOR 1
INPUT SPEED SENSOR 2
A/T ASSEMBLY F51
JOINT CONNECTOR
2 9 1 6 7 4 3 8
JCDWM1187GB

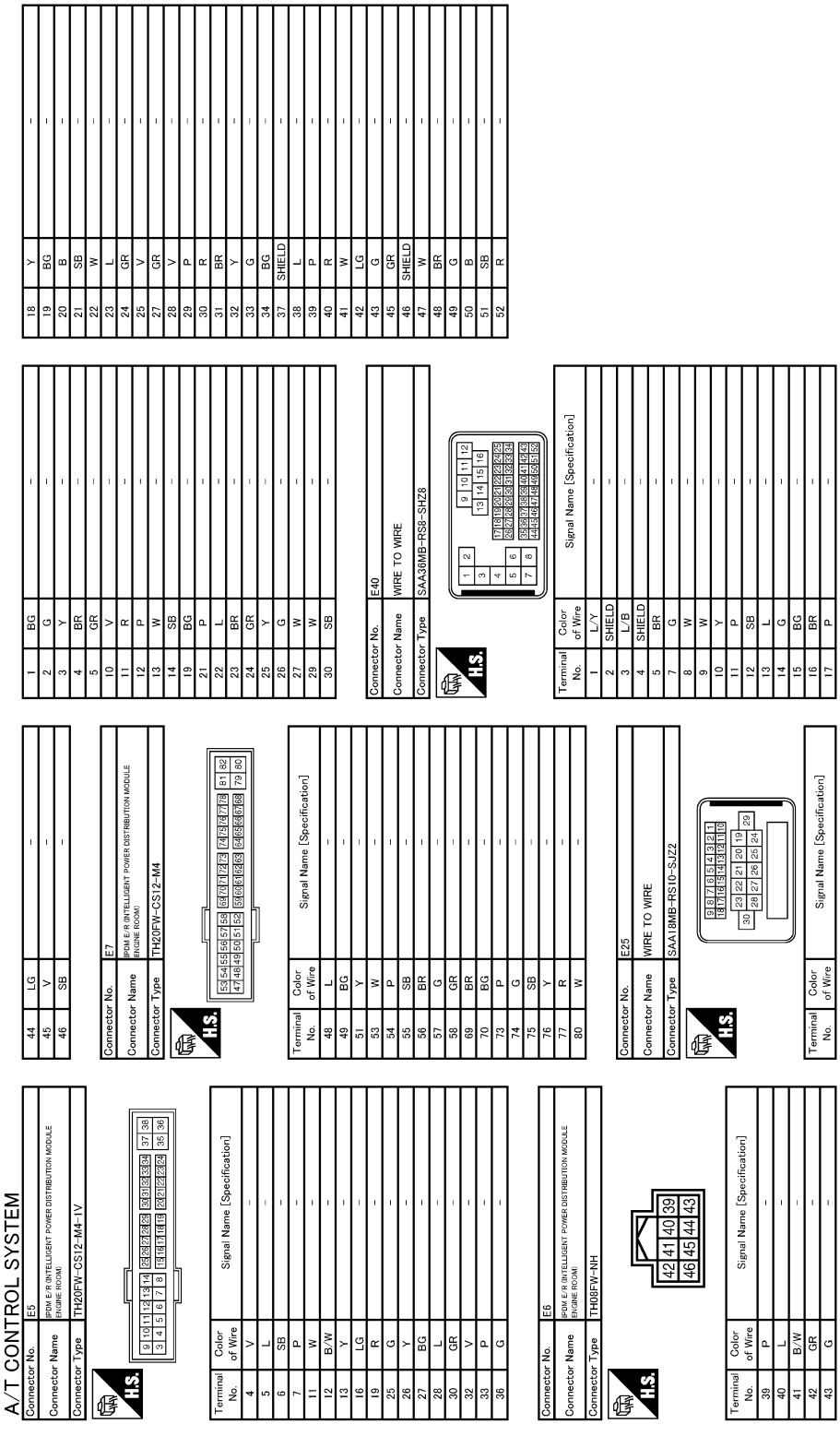
A/T CONTROL SYSTEM
Connector No. E5
Connector Name IPDM E/R (INTELLIGENT POWER DISTRIBUTION MODULE ENGINE ROOM)
Connector Type TH20FW-CS12-M4-1V
Terminal No. | Color of Wire | Signal Name [Specification]
4 V –
5 L –
6 SB –
7 P –
11 W –
12 B/W –
13 Y –
16 LG –
19 R –
25 G –
26 Y –
27 BG –
28 L –
30 GR –
32 V –
33 P –
36 G –
Connector No. E6
Connector Name IPDM E/R (INTELLIGENT POWER DISTRIBUTION MODULE ENGINE ROOM)
Connector Type TH08FW-NH
Terminal No. | Color of Wire | Signal Name [Specification]
39 P –
40 L –
41 B/W –
42 GR –
43 G –
44 LG –
45 V –
46 SB –
Connector No. E7
Connector Name IPDM E/R (INTELLIGENT POWER DISTRIBUTION MODULE ENGINE ROOM)
Connector Type TH20FW-CS12-M4
Terminal No. | Color of Wire | Signal Name [Specification]
48 L –
49 BG –
51 Y –
53 W –
54 P –
55 SB –
56 BR –
57 G –
58 GR –
69 BR –
70 BG –
73 P –
74 G –
75 SB –
76 Y –
77 R –
80 W –
Connector No. E25
Connector Name WIRE TO WIRE
Connector Type SAA18MB-RS10-SJ22
Terminal No. | Color of Wire | Signal Name [Specification]
1 BG –
2 G –
3 Y –
4 BR –
5 GR –
10 V –
11 R –
12 P –
13 W –
14 SB –
19 BG –
21 P –
22 L –
23 BR –
24 GR –
25 Y –
26 G –
27 W –
29 W –
30 SB –
Connector No. E40
Connector Name WIRE TO WIRE
Connector Type SAA36MB-RS8-SH28
Terminal No. | Color of Wire | Signal Name [Specification]
1 L/Y –
2 SHIELD –
3 L/B –
4 SHIELD –
5 BR –
7 G –
8 W –
9 W –
10 Y –
11 P –
12 SB –
13 L –
14 G –
15 BG –
16 BR –
17 P –
18 Y –
19 BG –
20 B –
21 SB –
22 W –
23 L –
24 GR –
25 V –
27 GR –
28 V –
29 P –
30 R –
31 BR –
32 Y –
33 G –
34 BG –
37 SHIELD –
38 L –
39 P –
40 R –
41 W –
42 LG –
43 G –
45 GR –
46 SHIELD –
47 W –
48 BR –
49 G –
50 B –
51 SB –
52 R –
JCDWM1188GB

A/T CONTROL SYSTEM

Connector No.	E106
Connector Name	WIRE TO WIRE
Connector Type	TH80FW-CS16-TM4

H.S.

Terminal No.	Color of Wire	Signal Name [Specification]
1	GR	–
3	BG	–
5	G	–
6	Y	–
7	V	–
9	R	–
10	W	–
11	V	–
12	R	–
13	L	–
17	SB	–
18	BG	–
19	SB	–
20	LG	–
30	BR	–
31	L	–
32	BG	–
33	P	–
34	V	–
35	W	– [AWD models]
36	SB	– [2WD models]
37	Y	–
38	R	–
39	B	–
40	G	–
41	R	–
42	LG	–
43	G	–
44	GR	–
45	BR	–
46	LG	–
47	V	–
48	P	–
49	L	–
59	B	–

66	GR	–
67	LG	–
68	SB	–
69	P	–
70	G	–
80	R	–
81	P	–
82	G	–
83	V	–
84	L	–
85	W	–
86	L	–
87	BR	–
88	GR	–
89	V	–
91	W	–
93	GR	–
95	LG	–
97	SB	–
98	SHIELD	–
99	L	–
100	P	–

Connector No.	F30
Connector Name	WIRE TO WIRE
Connector Type	SAA18FB-RS10-SJZ2

H.S.

Terminal No.	Color of Wire	Signal Name [Specification]
1	BG	–
2	G	–
3	GR	–
4	SB	–
5	BG	–
10	V	–
11	R	–
12	R	–
13	W	–
14	Y	–
19	BR	–
21	R	–
22	L	–
23	Y	–

24	GR	–
25	P	–
26	G	–
27	W	–
29	W	–
30	R	–

Connector No.	F39
Connector Name	WIRE TO WIRE
Connector Type	SAA36FB-RS8-SHZ8

H.S.

Terminal No.	Color of Wire	Signal Name [Specification]
1	L/Y	–
2	SHIELD	–
3	L/B	–
4	SHIELD	–
5	BR	–
7	G	–
8	W	–
9	W	–
10	G	–
11	R	–
12	P	–
13	L	–
14	LG	–
15	R	–
16	O	– [AWD models]
16	Y	– [2WD models]
17	W	–
18	LG	–
19	P	–
20	O	–
21	Y	–
22	G	–
23	Y	–
24	LG	–
25	V	–
27	GR	–
28	BR	–
29	L	–
30	R	–
31	P	–

32	W	–
33	SB	–
34	BR	– [AWD models]
34	O	– [2WD models]
37	B	– [AWD models]
37	SHIELD	– [2WD models]
38	W	–
39	Y	–
40	G	–
41	B	–
42	GR	–
43	R	–
45	O	–
46	SHIELD	–
47	W/L	–
48	LG	–
49	O/L	–
50	L/Y	–
51	W	–
52	L/G	–

Connector No.	F51
Connector Name	A/T ASSEMBLY
Connector Type	RK10FG-DGY

H.S.

Terminal No.	Color of Wire	Signal Name [Specification]
1	Y	–
2	BR	– [With VQ25HR engine]
2	R	– [With VQ37VHR engine]
3	L	–
4	V	–
5	B	–
6	Y	– [With VQ25HR engine]
6	G	– [With VQ37VHR engine]
7	R	–
8	P	–
9	GR	–
10	B	–

JCDWM1189GB

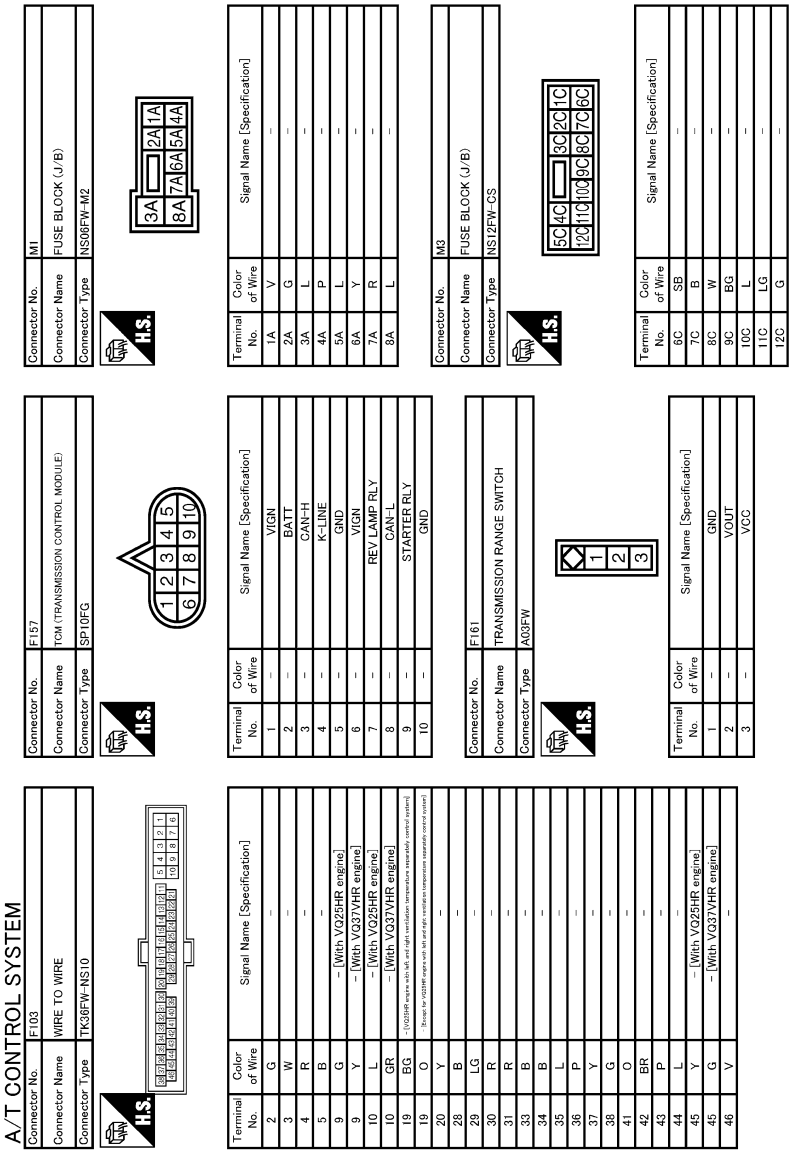

JCDWM1190GB

A/T CONTROL SYSTEM

Connector No.	M6
Connector Name	WIRE TO WIRE
Connector Type	TH80MW-CS16-TM4

H.S.

Terminal No.	Color of Wire	Signal Name [Specification]
1	BG	–
3	R	–
5	G	–
6	LG	–
7	W	–
9	G	–
10	W	–
11	V	–
12	R	–
13	L	–
14	GR	–
15	P	–
16	W	–
17	BR	–
18	P	–
19	L	–
20	L	–
30	BR	–
31	L	–
32	Y	–
33	BG	–
34	W	–
35	BR	–
36	R	–
37	Y	–
38	R	–
39	SB	–
40	G	–
41	V	–
42	LG	–
43	P	–
44	B	– [With A/T]
44	R	– [With M/T]
45	BG	–
46	G	–
47	L	–
48	P	–
49	L	–
58	B	–
66	Y	–
67	G	–
68	R	–
69	W	–
70	G	–
80	SB	–
81	B	–
82	V	–
83	W	–
84	L	–
85	GR	–
86	G	–
87	R	–
88	B	–
89	LG	–
91	W	–
93	Y	–
95	Y	–
97	GR	–
98	SHIELD	–
99	V	–
100	SB	–

Connector No.	M24
Connector Name	DATA LINK CONNECTOR
Connector Type	BD16FW-P

H.S.

Terminal No.	Color of Wire	Signal Name [Specification]
3	LG	–
4	B	–
5	B	–
6	L	–
7	V	–
8	G	–
11	SB	–
14	P	–
16	R	–

Connector No.	M32
Connector Name	PADDLE SHIFTER (SHIFT-DOWN)
Connector Type	A03FW

H.S.

Terminal No.	Color of Wire	Signal Name [Specification]
1	B	–
3	G	–

Connector No.	M39
Connector Name	PADDLE SHIFTER (SHIFT-UP)
Connector Type	A04FW

H.S.

Terminal No.	Color of Wire	Signal Name [Specification]
1	B	–
3	BG	–

Connector No.	M53
Connector Name	COMBINATION METER
Connector Type	SAB40FW

H.S.

Terminal No.	Color of Wire	Signal Name [Specification]
1	V	BATTERY POWER SUPPLY
2	LG	COMMUNICATION SIGNAL (METER->AMP.)
3	GR	COMMUNICATION SIGNAL (AMP.->METER)
5	B	GROUND
6	W	ALTERNATOR SIGNAL
7	LG	AIR BAG SIGNAL
10	W	SECURITY SIGNAL
15	B	GROUND
16	BR	METER CONTROL SWITCH GROUND
18	GR	ILL GND
19	B	ILL GND
20	R	ILL
21	G	IGNITION SIGNAL
22	B	GROUND
24	BR	COMMUNICATION SIGNAL (LCD->AMP.)
25	Y	COMMUNICATION SIGNAL (AMP.->LCD)
26	R	VEHICLE SPEED SIGNAL (8-PULSE)
27	P	PARKING BRAKE SWITCH SIGNAL
28	SB	BRAKE FLUID LEVEL SWITCH
29	P	SEAT BELT BUCKLE SW SIGNAL (DRIVER SIDE)
30	G	SEAT BELT BUCKLE SWITCH SIGNAL (PASSENGER SIDE)
31	L	WASHER LEVEL SWITCH SIGNAL
33	R	ILLUMINATION CONTROL SIGNAL
36	LG	SELECT SWITCH SIGNAL
37	Y	ENTER SWITCH SIGNAL
38	G	TRIP A/B RESET SWITCH SIGNAL
39	P	ILLUMINATION CONTROL SWITCH SIGNAL (-)
40	BG	ILLUMINATION CONTROL SWITCH SIGNAL (+)

JCDWM1191GB

A/T CONTROL SYSTEM

Connector No.	M66
Connector Name	UNIFIED METER AND A/C AMP.
Connector Type	TH40FW-NH

H.S.

1	2	3	4	5	6	7	8	9	10	11	12	13	14	15	16	17	18	19	20
21	22	23	24	25	26	27	28	29	30	31	32	33	34	35	36	37	38	39	40

Terminal No.	Color of Wire	Signal Name [Specification]
4	G	STOP LAMP SWITCH SIGNAL
5	L	MANUAL MODE SHIFT UP SIGNAL
6	BG	PADDLE SHIFTER UP SIGNAL
7	GR	COMMUNICATION SIGNAL (AMP.->METER)
8	L	VEHICLE SPEED SIGNAL (2-PULSE)
9	SB	SEAT BELT BUCKLE SWITCH SIGNAL (DRIVER SIDE)
10	W	MANUAL MODE SIGNAL
11	G	NON-MANUAL MODE SIGNAL
14	BR	COMMUNICATION SIGNAL (LCD->AMP.)
20	BR	ION ON / OFF SIGNAL
23	Y	AT SNOW SWITCH SIGNAL
25	V	MANUAL MODE SHIFT DOWN SIGNAL
26	G	PADDLE SHIFTER DOWN SIGNAL
27	LG	COMMUNICATION SIGNAL (METER->AMP.)
28	R	VEHICLE SPEED SIGNAL (8-PULSE)
30	V	PARKING BRAKE SWITCH SIGNAL
34	Y	COMMUNICATION SIGNAL (AMP.->LCD)
38	P	BLOWER MOTOR CONTROL SIGNAL

Connector No.	M67
Connector Name	UNIFIED METER AND A/C AMP.
Connector Type	TH32FW-NH

H.S.

41	42	43	44	45	46	47	48	49	50	51	52	53	54	55	56
57	58	59	60	61	62	63	64	65	66	67	68	69	70	71	72

Terminal No.	Color of Wire	Signal Name [Specification]
41	L	ACC POWER SUPPLY
42	BR	FUEL LEVEL SENSOR SIGNAL
43	BR	INTAKE SENSOR SIGNAL
44	LG	IN-VEHICLE SENSOR SIGNAL
45	V	AMBIENT SENSOR SIGNAL
46	Y	SUNLOAD SENSOR SIGNAL
47	G	EXHAUST GAS / OUTSIDE ODOR DETECTING SENSOR SIGNAL
53	W	IGNITION POWER SUPPLY
54	SB	BATTERY POWER SUPPLY
55	B	GROUND
56	L	CAN-H
57	LG	BRAKE FLUID LEVEL SWITCH
58	Y	FUEL LEVEL SENSOR GROUND
59	GR	INTAKE SENSOR GROUND
60	W	IN-VEHICLE SENSOR GROUND
61	B	AMBIENT SENSOR GROUND
62	SB	SUNLOAD SENSOR GROUND
63	L	ION CONTROL MODE OUTPUT SIGNAL
65	BG	ECV SIGNAL
69	P	A/C LAN SIGNAL
70	R	EACH DOOR MOTOR POWER SUPPLY
71	GR	GROUND
72	P	CAN-L

Connector No.	M69
Connector Name	BACK-UP LAMP RELAY
Connector Type	MS02FL-M2-LC

H.S.

3		
	5	
2		1

Terminal No.	Color of Wire	Signal Name [Specification]
1	R	–
2	W	–
3	LG	–
5	BG	–

Connector No.	M116
Connector Name	WIRE TO WIRE
Connector Type	TK36MW-NS10

H.S.

1	2	3	4	5	6	7	8	9	10	11	12	13	14	15	16	17	18	19	20	21	22	23	24	25	26	27	28	29	30	31	32	33	34	35	36

Terminal No.	Color of Wire	Signal Name [Specification]
2	W	–
3	BG	–
4	P	–
5	B	–
9	R	–
10	R	–
19	BG	–
20	Y	–
28	B	–
29	LG	–
30	LG	–
31	W	–
33	B	–
34	B	–
35	L	–
36	P	–
37	R	–
38	SB	–
41	BG	–
42	G	–
43	P	–
44	L	–
45	Y	–
46	SB	–

Connector No.	M118
Connector Name	BCM (BODY CONTROL MODULE)
Connector Type	M03FB-LC

H.S.

1	3	
	2	

Terminal No.	Color of Wire	Signal Name [Specification]
1	W	BAT (F/L)
2	Y	POWER WINDOW POWER SUPPLY (BAT)
3	BG	POWER WINDOW POWER SUPPLY (RAP)

Connector No.	M119
Connector Name	BCM (BODY CONTROL MODULE)
Connector Type	NS16FW-CS

H.S.

4	5	6	7		8	9	10
11	12	13	14	15	16	17	18	19

Terminal No.	Color of Wire	Signal Name [Specification]
4	LG	INTERIOR ROOM LAMP POWER SUPPLY
5	P	PASSENGER DOOR UNLOCK OUTPUT
7	SB	STEP LAMP OUTPUT
8	V	ALL DOOR, FUEL LID LOCK OUTPUT
9	G	DRIVER DOOR, FUEL LID UNLOCK OUTPUT
10	P	REAR DOOR UNLOCK OUTPUT
11	R	BAT (FUSE)
13	B	GND
14	W	PUSH-BUTTON IGNITION SW ILL GND
15	BG	ACC IND
17	W	TURN SIGNAL RH (FRONT)
18	BG	TURN SIGNAL LH (FRONT)
19	V	INT ROOM LAMP CONT

JCDWM1192GB

A/T CONTROL SYSTEM

Connector No.	M122
Connector Name	BCM (BODY CONTROL MODULE)
Connector Type	TH40FB-NH

H.S.

91	90	89	88	87	86	85	84	83	82	81	80	79	78	77	76	75	74	73	72
111	110	109	108	107	106	105	104	103	102	101	100	99	98	97	96	95	94	93	92

Terminal No.	Color of Wire	Signal Name [Specification]
72	R	ROOM ANT 2-
73	G	ROOM ANT 2+
74	SB	PASSENGER DOOR ANT-
75	BR	PASSENGER DOOR ANT+
76	V	DRIVER DOOR ANT-
77	LG	DRIVER DOOR ANT+
78	Y	ROOM ANT 1-
79	BR	ROOM ANT 1+
80	GR	NATS ANT AMP
81	W	NATS ANT AMP
82	SB	IGN RELAY (F/B) CONT
83	Y	KEYLESS ENTRY RECEIVER COMM
87	Y	COMBI SW INPUT 5
88	BG	COMBI SW INPUT 3
89	BR	PUSH SW
90	P	CAN-L
91	L	CAN-H
92	LG	KEY SLOT ILL
93	GR	ON IND
95	BG	ACC RELAY CONT
96	GR	A/T SHIFT SELECTOR POWER SUPPLY
97	L	S/L CONDITION 1
98	P	S/L CONDITION 2
99	R	SHIFT P [With A/T]
99	BR	ASCD CLUTCH SW [With M/T]
100	Y	PASSENGER DOOR REQUEST SW
101	P	DRIVER DOOR REQUEST SW
102	BG	BLOWER FAN MOTOR RELAY CONT
103	P	KEYLESS ENTRY RECEIVER POWER SUPPLY
106	SB	S/L UNIT POWER SUPPLY
107	LG	COMBI SW INPUT 1
108	R	COMBI SW INPUT 4
109	W	COMBI SW INPUT 2
110	G	HAZARD SW
111	Y	S/L UNIT COMM

Connector No.	M137
Connector Name	A/T SHIFT SELECTOR
Connector Type	TH12FW-NH

H.S.

1	2	3	4	5	6
7	8	9	10	11	12

Terminal No.	Color of Wire	Signal Name [Specification]
1	W	-
2	V	-
3	L	-
4	B	-
5	G	-
7	Y	-
8	LG	-
9	B	-
10	GR	-
11	R	-

Connector No.	M221
Connector Name	SHIFT POSITION SWITCH
Connector Type	TH12FW

H.S.

6	5	4	3	2	1
12	11	10	9	8	7

Terminal No.	Color of Wire	Signal Name [Specification]
2	L	N
3	BR	D
4	G	R
5	P	P
6	V	M
7	O	AT
9	Y	MT
10	R	ILL
11	B	GND

JCDWM1193GB

Fail-Safe

INFOID:0000000006207787

TCM has the electrical fail-safe mode. The mode is divided into a maximum of 3 phases (1st fail-safe, 2nd fail-safe and final fail-safe) and functions so that the operation can be continued even if the signal circuit of the main electronically controlled input/output parts is damaged.
Even if the electronic circuit is normal, the fail-safe mode may start under special conditions (such as when the brake pedal is depressed suddenly from a hard wheel spin status to stop the rotation of wheels). In this case, turn the ignition switch OFF and back to ON after 5 seconds to resume the normal shift pattern.

Consequently, the customer's vehicle may already return to the normal condition. Refer to TM-97, "Diagnosis Flow".

1st fail-safe	The mode that the vehicle can stop safely, to prompt the driver to stop if the malfunction occurs and to shift to 2nd fail-safe early. It shifts to 2nd fail-safe or final fail-safe after the vehicle stopped.
2nd fail-safe	The mode that the vehicle shifts to final fail-safe without changing the behavior, by identifying the malfunctioning parts in the condition that the driving force required for the driving is secured.
Final fail-safe	• Selects the shifting pattern that the malfunctioning parts identified at 1st and 2nd fail-safe are not used, and then secure the driving force that is required for the driving. • The mode that the shifting performance does not decrease by normal shift control.

FAIL-SAFE FUNCTION

DTC	Vehicle condition	Vehicle behavior for 1st fail-safe	Vehicle behavior for 2nd fail-safe	Vehicle behavior for final fail-safe
P0615	—	Starter is disabled	—	Starter is disabled
P0705	—	• Fixed in the “D” position (The shifting can be performed) • 30 km/h (19MPH) or less • Lock-up is prohibited • The shifting between the gears of 3 - 4 - 5 - 6 - 7 can be performed • Manual mode is prohibited • Shift position indicator is switched OFF • Starter relay is switched OFF (starter is disabled) • Back-up lamp is OFF • Large shift shock	—	• Fixed in the “D” position (The shifting can be performed) • 30 km/h (19 MPH) or less • Lock-up is prohibited • The shifting between the gears of 3 - 4 - 5 - 6 - 7 can be performed • Manual mode is prohibited • Shift position indicator is switched OFF • Starter relay is switched OFF (starter is disabled) • Back-up lamp is OFF • Large shift shock
P0710	Between the gears of 1 - 2 - 3	• The shifting between the gears of 1 - 2 - 3 can be performed • Manual mode is prohibited	—	• The shifting between the gears of 1 - 2 - 3 can be performed • Manual mode is prohibited
	Between the gears of 4 - 5 - 6 - 7	• Fix the gear while driving • Manual mode is prohibited	—	
P0717	Between the gears of 1 - 2 - 3	• The shifting between the gears of 1 - 2 - 3 can be performed • Manual mode is prohibited	—	• The shifting between the gears of 1 - 2 - 3 can be performed • Manual mode is prohibited
	Between the gears of 4 - 5 - 6 - 7	• Fix the gear while driving • Manual mode is prohibited	—	
P0720	Between the gears of 1 - 2 - 3	• Only downshift can be performed • Manual mode is prohibited • A vehicle speed signal from the unified meter and A/C amp. is regarded as an effective signal	—	• The shifting between the gears of 1 - 2 - 3 can be performed • Manual mode is prohibited
	Between the gears of 4 - 5 - 6 - 7	• Fix the gear at driving • Manual mode is prohibited • A vehicle speed signal from the unified meter and A/C amp. is regarded as an effective signal	—	

DTC	Vehicle condition		Vehicle behavior for 1st fail-safe	Vehicle behavior for 2nd fail-safe	Vehicle behavior for final fail-safe
P0729 P0731 P0732 P0733 P0734 P0735 P1734	Small gear ratio difference		Engine torque limit: Max 150Nm	—	Engine torque limit: Max 150Nm
	Great gear ratio difference	Neutral malfunction between the gears of 1 - 2 - 3 and 7	• Locks in 2GR, 3GR or 4GR • Manual mode is prohibited • Neutral	—	• Locks in 1GR • The shifting between the gears of 1 - 2 can be performed • The shifting between the gears of 1 - 2 - 3 can be performed • The shifting between the gears of 4 - 5 - 6 can be performed • Manual mode is prohibited
		Other than the above	• Driving with the gear ratio between 1GR and 2GR • Driving with the gear ratio between 2GR and 3GR • Locks in 1GR, 2GR, 3GR, 4GR,5GR or 6GR • Fix the gear while driving • Manual mode is prohibited • Neutral	• The shifting between the gears of 1 - 2 - 3 can be performed • Manual mode is prohibited	• Locks in 1GR • The shifting between the gears of 1 - 2 can be performed • The shifting between the gears of 1 - 2 - 3 can be performed • The shifting between the gears of 2 - 3 - 4 can be performed • The shifting between the gears of 3 - 4 can be performed • The shifting between the gears of 4 - 5 - 6 can be performed • Manual mode is prohibited
P0730	—		• Locks in 5GR, 6GR or 7GR • Manual mode is prohibited • Neutral	• The shifting between the gears of 1 - 2 - 3 can be performed • Manual mode is prohibited	• Locks in 1GR • The shifting between the gears of 1 - 2 can be performed • The shifting between the gears of 1 - 2 - 3 can be performed • Manual mode is prohibited
P0740	—		• Lock-up is prohibited • Slip lock-up is prohibited	—	• Lock-up is prohibited • Slip lock-up is prohibited
P0744	—		• Lock-up is prohibited • Slip lock-up is prohibited	—	• Lock-up is prohibited • Slip lock-up is prohibited
P0750 P0775 P0795 P2713 P2722 P2731 P2807	—		• Locks in 2GR, 3GR, 4GR, 5GR, 6GR or 7GR • Manual mode is prohibited	—	• Locks in 1GR • The shifting between the gears of 1 - 2 - 3 can be performed • The shifting between the gears of 3 - 4 - 5 can be performed • The shifting between the gears of 4 - 5 - 6 can be performed • The shifting between the gears of 1 - 2 - 3 - 4 - 5 - 6 can be performed • Manual mode is prohibited
P0780	—		• Locks in 3GR • Manual mode is prohibited • Neutral	—	• The shifting between the gears of 1 - 2 - 3 can be performed • Manual mode is prohibited

DTC	Vehicle condition	Vehicle behavior for 1st fail-safe	Vehicle behavior for 2nd fail-safe	Vehicle behavior for final fail-safe
P1705	—	• Downshift when accelerator pedal is depressed is prohibited • Upshift when accelerator pedal is released is prohibited • Manual mode is prohibited	• Downshift when accelerator pedal is depressed is prohibited • Upshift when accelerator pedal is released is prohibited • Manual mode is prohibited	• Downshift when accelerator pedal is depressed is prohibited • Upshift when accelerator pedal is released is prohibited • Manual mode is prohibited
P1730	—	• Locks in 1GR, 2GR, 3GR, 4GR,5GR, 6GR or 7GR • Neutral • Manual mode is prohibited	• The shifting between the gears of 1 - 2 - 3 can be performed • Manual mode is prohibited	• Locks in 1GR • The shifting between the gears of 2 - 3 - 4 can be performed • The shifting between the gears of 3 - 4 can be performed • The shifting between the gears of 4 - 5 - 6 can be performed • Manual mode is prohibited
P1815	Gate switch malfunction	Only the gate switch is prohibited	—	Only the gate switch is prohibited
	Paddle switch malfunction	Only the paddle switch is prohibited	—	Only the paddle switch is prohibited
	Malfunction of both switches	Manual mode is prohibited	—	Manual mode is prohibited
U0300 U1000	Between the gears of 1 - 2 - 3	• The shifting between the gears of 1 - 2 - 3 can be performed • Manual mode is prohibited	—	• The shifting between the gears of 1 - 2 - 3 can be performed • Line pressure is set to the maximum hydraulic pressure • Manual mode is prohibited
	Between the gears of 4 - 5 - 6 - 7	• Fix the gear at driving • Manual mode is prohibited	—	
P0720 and P1721	—	Locks in 5GR	—	Locks in 5GR

Protection Control

INFOID:0000000006207788

The TCM becomes the protection control status temporarily to protect the safety when the safety of TCM and transmission is lost. It automatically returns to the normal status if the safety is secured.
The TCM has the following protection control.

REVERSE INHIBIT CONTROL

Intercepts the torque transmission and shift to the neutral status if the selector lever is shifted to “R” position while the vehicle moves forward at the vehicle speed 10 km/h (7 MPH) or more.

Malfunction detection condition	Vehicle speed: 10 km/h (7 MPH) or more
Control at malfunction	Neutral
Normal return condition	• Vehicle speed: 8 km/h (5 MPH) or less and • Engine speed: 2,200 rpm or less
Vehicle behavior	• The torque transmission cannot be performed • There is a shock just before a vehicle stop

1ST ENGINE BRAKE PROTECTION CONTROL

Controls the engine brake so as not to make effective by turning the front brake solenoid output to OFF when each solenoid becomes the electricity pattern of 1st engine brake during driving at the vehicle speed 25 km/h or more in any positions other than “R” position and 1GR.

Malfunction detection condition	• Select lever and gear: Any position other than “R” position and 1GR and • Vehicle speed: More than 25 km/h (16 MPH)
Control at malfunction	Front brake solenoid output signal; OFF
Normal return condition	Other than detection condition of malfunction
Vehicle behavior	Does not exist

TCM HIGH TEMPERATURE PROTECTION CONTROL

Limit the accelerator opening and forcibly control the vehicle to the low torque driving when the electronic substrate in TCM reaches the high temperature.

Malfunction detection condition	TCM electronic substrate temperature • 145°C (293°F) and 120 seconds or • 150°C (302°F)
Control at malfunction	Accelerator opening: 0.5/8 or less
Normal return condition	• TCM electronic substrate temperature: Less than 140°C (284°F) and • Vehicle speed: 5 km/h (3 MPH) or less
Vehicle behavior	Accelerator opening: output torque of approximately 0.5/8

DTC Inspection Priority Chart

INFOID:0000000006207789

If some DTCs are displayed at the same time, perform inspections one by one based on the priority as per the following list.

Priority	Detected items (DTC)	Reference
1	U1000 CAN COMM CIRCUIT	TM-158, "DTC Logic"
2	P0615 STARTER RELAY	TM-159, "DTC Logic"
	P0705 T/M RANGE SENSOR A	TM-161, "DTC Logic"
	P0710 FLUID TEMP SENSOR A	TM-163, "DTC Logic"
	P0717 INPUT SPEED SENSOR A	TM-165, "DTC Logic"
	P0720 OUTPUT SPEED SENSOR	TM-167, "DTC Logic"
	P0740 TORQUE CONVERTER	TM-185, "DTC Logic"
	P0745 PC SOLENOID A	TM-189, "DTC Logic"
	P0750 SHIFT SOLENOID A	TM-190, "DTC Logic"
	P0775 PC SOLENOID B	TM-191, "DTC Logic"
	P0795 PC SOLENOID C	TM-194, "DTC Logic"
	P2713 PC SOLENOID D	TM-209, "DTC Logic"
	P2722 PC SOLENOID E	TM-210, "DTC Logic"
	P2731 PC SOLENOID F	TM-211, "DTC Logic"
	P2807 PC SOLENOID G	TM-212, "DTC Logic"

Priority	Detected items (DTC)	Reference
3	P0729 6GR INCORRECT RATIO	TM-171, "DTC Logic"
	P0730 INCORRECT GR RATIO	TM-173, "DTC Logic"
	P0731 1GR INCORRECT RATIO	TM-175, "DTC Logic"
	P0732 2GR INCORRECT RATIO	TM-177, "DTC Logic"
	P0733 3GR INCORRECT RATIO	TM-179, "DTC Logic"
	P0734 4GR INCORRECT RATIO	TM-181, "DTC Logic"
	P0735 5GR INCORRECT RATIO	TM-183, "DTC Logic"
	P0744 TORQUE CONVERTER	TM-187, "DTC Logic"
	P0780 SHIFT	TM-192, "DTC Logic"
	P1730 INTERLOCK	TM-199, "DTC Logic"
	P1734 7GR INCORRECT RATIO	TM-201, "DTC Logic"
4	U0300 CAN COMM DATA	TM-157, "DTC Logic"
	P0725 ENGINE SPEED	TM-169, "DTC Logic"
	P1705 TP SENSOR	TM-195, "DTC Logic"
	P1721 VEHICLE SPEED SIGNAL	TM-197, "DTC Logic"
	P1815 M-MODE SWITCH	TM-203, "DTC Logic"

DTC Index

INFOID:0000000006207790

NOTE:
- If some DTCs are displayed at the same time, perform inspections one by one based on the priority as per the following list. Refer to TM-250, "DTC Inspection Priority Chart".
- The IGN counter is indicated in Freeze frame data (FFD). Refer to TM-151, "CONSULT-III Function (TRANSMISSION)".

Items (CONSULT-III screen terms)	DTC*2		Reference
	MIL*1, “ENGINE” with CONSULT-III or GST	CONSULT-III only “TRANSMISSION”	
STARTER RELAY	—	P0615	TM-159, "DTC Logic"
T/M RANGE SENSOR A	P0705	P0705	TM-161, "DTC Logic"
FLUID TEMP SENSOR A	P0710	P0710	TM-163, "DTC Logic"
INPUT SPEED SENSOR A	P0717	P0717	TM-165, "DTC Logic"
OUTPUT SPEED SENSOR	P0720	P0720	TM-167, "DTC Logic"
ENGINE SPEED	—	P0725	TM-169, "DTC Logic"
6GR INCORRECT RATIO	P0729	P0729	TM-171, "DTC Logic"
INCORRECT GR RATIO	P0730	P0730	TM-173, "DTC Logic"
1GR INCORRECT RATIO	P0731	P0731	TM-175, "DTC Logic"
2 GR INCORRECT RATIO	P0732	P0732	TM-177, "DTC Logic"
3GR INCORRECT RATIO	P0733	P0733	TM-179, "DTC Logic"
4GR INCORRECT RATIO	P0734	P0734	TM-181, "DTC Logic"
5GR INCORRECT RATIO	P0735	P0735	TM-183, "DTC Logic"
TORQUE CONVERTER	P0740	P0740	TM-185, "DTC Logic"
TORQUE CONVERTER	P0744	P0744	TM-187, "DTC Logic"
PC SOLENOID A	P0745	P0745	TM-189, "DTC Logic"
SHIFT SOLENOID A	P0750	P0750	TM-190, "DTC Logic"
PC SOLENOID B	P0775	P0775	TM-191, "DTC Logic"
SHIFT	P0780	P0780	TM-192, "DTC Logic"

Items (CONSULT-III screen terms)	DTC*2		Reference
	MIL*1, “ENGINE” with CONSULT-III or GST	CONSULT-III only “TRANSMISSION”	
PC SOLENOID C	P0795	P0795	TM-194, "DTC Logic"
TP SENSOR	—	P1705	TM-195, "DTC Logic"
VEHICLE SPEED SIGNAL	—	P1721	TM-197, "DTC Logic"
INTERLOCK	P1730	P1730	TM-199, "DTC Logic"
7 GR INCORRECT RATIO	P1734	P1734	TM-201, "DTC Logic"
M-MODE SWITCH	—	P1815	TM-203, "DTC Logic"
PC SOLENOID D	P2713	P2713	TM-209, "DTC Logic"
PC SOLENOID E	P2722	P2722	TM-210, "DTC Logic"
PC SOLENOID F	P2731	P2731	TM-211, "DTC Logic"
PC SOLENOID G	P2807	P2807	TM-212, "DTC Logic"
CAN COMM DATA	—	U0300	TM-157, "DTC Logic"
CAN COMM CIRCUIT	U1000	U1000	TM-158, "DTC Logic"

*1: Refer to TM-150, "Diagnosis Description".
*2: These numbers are prescribed by SAE J2012.

SYMPTOM DIAGNOSIS

SYSTEM SYMPTOM

Symptom Table

INFOID:0000000006822399

- The diagnostics item numbers show the sequence for inspection. Inspect in order from item 1.
- Perform diagnoses of symptom table 1 before symptom table 2.

SYMPTOM TABLE 1

Symptom				Diagnostic item																							
				Control linkage TM-274	Output speed sensor TM-167	Vehicle speed signal TM-197	Accelerator pedal position sensor TM-195	Engine speed signal TM-169	Input speed sensor TM-165	A/T fluid temperature sensor TM-163	Battery voltage TM-213	Transmission range switch TM-161	Manual mode switch TM-203	Stop lamp switch SEC-59	Line pressure solenoid valve TM-189	Torque converter solenoid valve TM-185	Low brake solenoid valve TM-210	Front brake solenoid valve TM-194	High and low reverse clutch solenoid valve TM-209	Input clutch solenoid valve TM-191	Direct clutch solenoid valve TM-212	2346 brake solenoid valve TM-211	Anti-interlock solenoid valve TM-190	Starter relay TM-159	CAN communication TM-158
Poor performance	Driving performance	Shift point is high in “D” position.			1		2			3																	
		Shift point is low in “D” position.			1		2																				
		Large shock	When shifting gears	→ “D” position	4			7	6		6		5			3		2						3		1
				→ “R” position	4			7	6		6		5			3						2				1
				1GR ⇔ 2GR		4		2	5	4	4													3		1
				2GR ⇔ 3GR		4		2	5	4	4												3			1
				3GR ⇔ 4GR		4		2	5	4	4							3			3					1
				4GR ⇔ 5GR		4		2	5	4	4											3		3		1
				5GR ⇔ 6GR		4		2	5	4	4											3		3		1
				6GR ⇔ 7GR		4		2	5	4	4								3					3		1
				Downshift when accelerator pedal is depressed		3		2	4	3	3															1
				Upshift when accelerator pedal is released		3		2	4	3	3															1
				Lock-up		4		2	4	4	4						3									1
		Judder		Lock-up				2	1	1	4						3									
	Strange noise			In “R” position		2			1																		
				In “N” position		2			1																		
				In “D” position		2			1																		
				Engine at idle		2			1																		

Symptom				Diagnostic item																							
				Control linkage	Output speed sensor	Vehicle speed signal	Accelerator pedal position sensor	Engine speed signal	Input speed sensor	A/T fluid temperature sensor	Battery voltage	Transmission range switch	Manual mode switch	Stop lamp switch	Line pressure solenoid valve	Torque converter solenoid valve	Low brake solenoid valve	Front brake solenoid valve	High and low reverse clutch solenoid valve	Input clutch solenoid valve	Direct clutch solenoid valve	2346 brake solenoid valve	Anti-interlock solenoid valve	Starter relay	CAN communication
				TM-274	TM-167	TM-197	TM-195	TM-169	TM-165	TM-163	TM-213	TM-161	TM-203	SEC-59	TM-189	TM-185	TM-210	TM-194	TM-209	TM-191	TM-212	TM-211	TM-190	TM-159	TM-158
Function trouble	Gear does no change	“D” position	Locks in 1GR		1												1		1		1				
			Locks in 2GR																						
			Locks in 3GR																						
			Locks in 4GR																						
			Locks in 5GR								1														
			Locks in 6GR																						
			Locks in 7GR																						
			1GR → 2GR		1													1		1		1			
			2GR → 3GR																	1					
			3GR → 4GR		2				2	2							2	2	2	2					1
			4GR → 5GR																	1	1				
			5GR → 6GR																	1					
			6GR → 7GR														1	1	1	1			1		
			5GR → 4GR																	1					
			4GR → 3GR														1		1				1		
			3GR → 2GR									1									1				
			2GR → 1GR									1									1	1			
			Does not lock-up		2			2	2	2	4	5		3	2	2	2	2	2	2	2	2	2		1
		“M” position	1GR ⇔ 2GR		3				3	3		3	2		3	3	3	3	3	3	3	3	3		1
			2GR ⇔ 3GR		3				3	3		3	2		3	3	3	3	3	3	3	3	3		1
			3GR ⇔ 4GR		3				3	3		3	2		3	3	3	3	3	3	3	3	3		1
			4GR ⇔ 5GR		3				3	3		3	2		3	3	3	3	3	3	3	3	3		1
			5GR ⇔ 6GR		3				3	3		3	2		3	3	3	3	3	3	3	3	3		1
			6GR ⇔ 7GR		3				3	3		3	2		3	3	3	3	3	3	3	3	3		1

Symptom					Diagnostic item																									
					Control linkage (TM-274)	Output speed sensor (TM-167)	Vehicle speed signal (TM-197)	Accelerator pedal position sensor (TM-195)	Engine speed signal (TM-169)	Input speed sensor (TM-165)	A/T fluid temperature sensor (TM-163)	Battery voltage (TM-213)	Transmission range switch (TM-161)	Manual mode switch (TM-203)	Stop lamp switch (SEC-59)	Line pressure solenoid valve (TM-189)	Torque converter clutch solenoid valve (TM-185)	Low brake solenoid valve (TM-210)	Front brake solenoid valve (TM-194)	High and low reverse clutch solenoid valve (TM-209)	Input clutch solenoid valve (TM-191)	Direct clutch solenoid valve (TM-212)	2346 brake solenoid valve (TM-211)	Anti-interlock solenoid valve (TM-190)	Starter relay (TM-159)	CAN communication (TM-158)
Function trouble	Poor shifting	Slip	When shifting gears	1GR ⇔ 2GR		3			3	3	4					2							2			1
				2GR ⇔ 3GR		3			3	3	4					2						2					1
				3GR ⇔ 4GR		3			3	3	4					2		2		2				2			1
				4GR ⇔ 5GR		3			3	3	4					2					2		2			1
				5GR ⇔ 6GR		3			3	3	4					2						2	2			1
				6GR ⇔ 7GR		3			3	3	4					2			2				2			1
		Engine brake does not work	“D” position → “M” position			5			5	5	6		4	2		3			3	3						1
			“M” position	7GR → 6GR		5			5	5	6		4	2		3			3				3			1
				6GR → 5GR		5			5	5	6		4	2		3						3	3			1
				5GR → 4GR		5			5	5	6		4	2		3					3		3			1
				4GR → 3GR		5			5	5	6		4	2		3		3		3				3		1
				3GR → 2GR		5			5	5	6		4	2		3				3		3				1
				2GR → 1GR		5			5	5	6		4	2		3			3				3			1

Symptom				Diagnostic item																								
				Control linkage	Output speed sensor	Vehicle speed signal	Accelerator pedal position sensor	Engine speed signal	Input speed sensor	A/T fluid temperature sensor	Battery voltage	Transmission range switch	Manual mode switch	Stop lamp switch	Line pressure solenoid valve	Torque converter clutch solenoid valve	Low brake solenoid valve	Front brake solenoid valve	High and low reverse clutch solenoid valve	Input clutch solenoid valve	Direct clutch solenoid valve	2346 brake solenoid valve	Anti-interlock solenoid valve	Starter relay	CAN communication
				TM-274	TM-167	TM-197	TM-195	TM-169	TM-165	TM-163	TM-213	TM-161	TM-203	SEC-59	TM-189	TM-185	TM-210	TM-194	TM-209	TM-191	TM-212	TM-211	TM-190	TM-159	TM-158
Function trouble	Poor power transmission	Slip	With selector lever in “D” position, acceleration is extremely poor.	5	3			3	3	4					2		2						2		1
			With selector lever in “R” position, acceleration is extremely poor.	5	3			3	3	4					2						2		2		1
			While starting off by accelerating in 1GR, engine races.		3			3	3	4					2		2						2		1
			While accelerating in 2GR, engine races.		3			3	3	4					2		2					2	2		1
			While accelerating in 3GR, engine races.		3			3	3	4					2		2				2	2			1
			While accelerating in 4GR, engine races.		3			3	3	4					2				2		2	2			1
			While accelerating in 5GR, engine races.		3			3	3	4					2				2	2	2		2		1
			While accelerating in 6GR, engine races.		3			3	3	4					2				2	2		2	2		1
			While accelerating in 7GR, engine races.		3			3	3	4					2			2	2	2			2		1
			Lock-up		3			3	3	4					2	2									1
			No creep at all.												1	1	1	1	1	1	1	1	1		
			Extremely large creep.					1																	

Symptom			Diagnostic item																						
			Control linkage TM-274	Output speed sensor TM-167	Vehicle speed signal TM-197	Accelerator pedal position sensor TM-195	Engine speed signal TM-169	Input speed sensor TM-165	A/T fluid temperature sensor TM-163	Battery voltage TM-213	Transmission range switch TM-161	Manual mode switch TM-203	Stop lamp switch SEC-59	Line pressure solenoid valve TM-189	Torque converter clutch solenoid valve TM-185	Low brake solenoid valve TM-210	Front brake solenoid valve TM-194	High and low reverse clutch solenoid valve TM-209	Input clutch solenoid valve TM-191	Direct clutch solenoid valve TM-212	2346 brake solenoid valve TM-211	Anti-interlock solenoid valve TM-190	Starter relay TM-159	CAN communication TM-158
Function trouble	Power transmission cannot be performed	Vehicle cannot run in all position.	3								2			1	1	1	1	1	1	1	1	1		
		Driving is not possible in “D” position.	3								2			1	1	1	1	1	1	1	1	1		
		Driving is not possible in “R” position.	3								2			1						1		1		
		Engine stall		4		5	5			6			3		2								1	
		Engine stalls when selector lever shifted “N” → “D” or “R”.		4		5	5				3				2								1	
		Engine does not start in “N” or “P” position.	3							1	2												1	
		Engine starts in position other than “N” or “P”.	3								2												1	
	Poor operation	Vehicle does not enter parking condition.	1								2													
		Parking condition is not cancelled.	1								2													
		Vehicle runs with A/T in “P” position.	1								2													
		Vehicle moves forward with the “R” position.	1								2													
		Vehicle runs with A/T in “N” position.	1								2													
		Vehicle moves backward with the “D” position.	1								2													

SYMPTOM TABLE 2

Symptom				Diagnostic item														
				Oil pump TM-379	Torque converter TM-316	Low brake* TM-316	Front brake TM-316	High and low reverse clutch TM-402	Input clutch TM-391	Direct clutch TM-405	2346 brake TM-379	Reverse brake TM-316	1st one-way clutch TM-316	2nd one-way clutch TM-397	gear TM-316	control valve TM-283	Parking component TM-316
Poor performance	Driving performance	Shift point is high in “D” position.															
		Shift point is low in “D” position.															
		Large shock	When shifting gears	→ “D” position	1		2										2	
				→ “R” position	1								1				2	
				1GR ⇔ 2GR								1					2	
				2GR ⇔ 3GR							1						2	
				3GR ⇔ 4GR			2		1								2	
				4GR ⇔ 5GR						1		1					2	
				5GR ⇔ 6GR							1	1					2	
				6GR ⇔ 7GR				1				1					2	
				Downshift when accelerator pedal is depressed			2	1	1	1	1	1		1	1		2	
				Upshift when accelerator pedal is released			2	1	1	1	1	1		1	1		2	
				Lock-up		1											2	
		Judder		Lock-up		1											2	
	Strange noise			In “R” position	1	1							1			1	2	
				In “N” position	1	1										1	2	
				In “D” position	1	1	1									1	2	
				Engine at idle	1	1										1	2	

*: Parts behind drum support is impossible to perform inspection by disassembly. Refer to TM-122, "Cross-Sectional View".

Symptom				Diagnostic item														
				Oil pump TM-379	Torque converter TM-316	Low brake* TM-316	Front brake TM-316	High and low reverse clutch TM-402	Input clutch TM-391	Direct clutch TM-405	2346 brake TM-379	Reverse brake TM-316	1st one-way clutch TM-316	2nd one-way clutch TM-397	gear TM-316	control valve TM-283	Parking component TM-316	
Function trouble	Gear does no change	“D” position	Locks in 1GR				1		1		1					2		
			Locks in 2GR													1		
			Locks in 3GR													1		
			Locks in 4GR													1		
			Locks in 5GR													1		
			Locks in 6GR													1		
			Locks in 7GR													1		
			1GR → 2GR				1		1		1					2		
			2GR → 3GR							1						2		
			3GR → 4GR			2	1	1	1							2		
			4GR → 5GR							1	1					2		
			5GR → 6GR							1						2		
			6GR → 7GR			2	1	1	1							2		
			5GR → 4GR						1							2		
			4GR → 3GR			2		1								2		
			3GR → 2GR							1				1		2		
			2GR → 1GR							1	1		1			2		
			Does not lock-up		1	2	1	1	1	1	1		1	1		2		
		“M” position	1GR ⇔ 2GR			2	1	1	1	1	1		1	1		2		
			2GR ⇔ 3GR			2	1	1	1	1	1		1	1		2		
			3GR ⇔ 4GR			2	1	1	1	1	1		1	1		2		
			4GR ⇔ 5GR			2	1	1	1	1	1		1	1		2		
			5GR ⇔ 6GR			2	1	1	1	1	1		1	1		2		
			6GR ⇔ 7GR			2	1	1	1	1	1		1	1		2		

*: Parts behind drum support is impossible to perform inspection by disassembly. Refer to TM-122, "Cross-Sectional View".

Symptom					Diagnostic item														
					Oil pump TM-379	Torque converter TM-316	Low brake* TM-316	Front brake TM-316	High and low reverse clutch TM-402	Input clutch TM-391	Direct clutch TM-405	2346 brake TM-379	Reverse brake TM-316	1st one-way clutch TM-316	2nd one-way clutch TM-397	gear TM-316	control valve TM-283	Parking component TM-316
Function trouble	Poor shifting	Slip	When shifting gears	1GR ⇔ 2GR	1							1		1			2	
				2GR ⇔ 3GR	1						1						2	
				3GR ⇔ 4GR	1		2		1								2	
				4GR ⇔ 5GR	1					1		1					2	
				5GR ⇔ 6GR	1						1	1					2	
				6GR ⇔ 7GR	1			1				1					2	
		Engine brake does not work	“D” position → “M” position		1			1	1					1	1		2	
			“M” position	7GR → 6GR	1			1				1					2	
				6GR → 5GR	1						1	1					2	
				5GR → 4GR	1					1		1					2	
				4GR → 3GR	1		2		1								2	
				3GR → 2GR	1				1		1			1	1		2	
				2GR → 1GR	1			1				1		1			2	

Symptom				Diagnostic item														
				Oil pump TM-379	Torque converter TM-316	Low brake* TM-316	Front brake TM-316	High and low reverse clutch TM-402	Input clutch TM-391	Direct clutch TM-405	2346 brake TM-379	Reverse brake TM-316	1st one-way clutch TM-316	2nd one-way clutch TM-397	gear TM-316	control valve TM-283	Parking component TM-316
Function trouble	Poor power transmission	Slip	With selector lever in “D” position, acceleration is extremely poor.	1	1	2							1		1	2	
			With selector lever in “R” position, acceleration is extremely poor.	1	1							1	1	1	1	2	
			While starting off by accelerating in 1GR, engine races.	1	1	2							1	1	1	2	
			While accelerating in 2GR, engine races.	1		2					1			1	1	2	
			While accelerating in 3GR, engine races.	1		2				1	1				1	2	
			While accelerating in 4GR, engine races.	1				1		1	1				1	2	
			While accelerating in 5GR, engine races.	1				1	1	1					1	2	
			While accelerating in 6GR, engine races.	1				1	1		1				1	2	
			While accelerating in 7GR, engine races.	1			1	1	1							2	
			Lock-up	1	1										1	2	
			No creep at all.	1	1	2	1	1	1	1	1		1	1	1	2	1
			Extremely large creep.		1												

*: Parts behind drum support is impossible to perform inspection by disassembly. Refer to TM-122, "Cross-Sectional View".

Symptom			Diagnostic item													
			Oil pump TM-379	Torque converter TM-316	Low brake* TM-316	Front brake TM-316	High and low reverse clutch TM-402	Input clutch TM-391	Direct clutch TM-405	2346 brake TM-379	Reverse brake TM-316	gear TM-316	1st one-way clutch TM-397	2nd one-way clutch TM-316	control valve TM-283	Parking component TM-316
Function trouble	Power transmission cannot be performed	Vehicle cannot run in all position.	1	1	2	1	1	1	1	1				1	2	1
		Driving is not possible in “D” position.	1	1	2	1	1	1	1	1		1	1	1	2	1
		Driving is not possible in “R” position.	1								1	1	1	1	2	1
		Engine stall		1												
		Engine stalls when selector lever shifted “N” → “D” or “R”.		1												
		Engine does not start in “N” or “P” position.		1												
		Engine starts in position other than “N” or “P”.														
	Poor operation	Vehicle does not enter parking condition.														1
		Parking condition is not cancelled.														1
		Vehicle runs with A/T in “P” position.			2	1	1	1	1	1	1				2	1
		Vehicle moves forward with the “R” position.			2	1	1	1	1	1					2	
		Vehicle runs with A/T in “N” position.			2	1	1	1	1	1	1				2	
		Vehicle moves backward with the “D” position.									1				2	

*: Parts behind drum support is impossible to perform inspection by disassembly. Refer to TM-122, "Cross-Sectional View".

PRECAUTION

PRECAUTIONS

Precaution for Supplemental Restraint System (SRS) "AIR BAG" and "SEAT BELT PRE-TENSIONER"

INFOID:0000000006207792

The Supplemental Restraint System such as “AIR BAG” and “SEAT BELT PRE-TENSIONER”, used along with a front seat belt, helps to reduce the risk or severity of injury to the driver and front passenger for certain types of collision. This system includes seat belt switch inputs and dual stage front air bag modules. The SRS system uses the seat belt switches to determine the front air bag deployment, and may only deploy one front air bag, depending on the severity of a collision and whether the front occupants are belted or unbelted. Information necessary to service the system safely is included in the “SRS AIR BAG” and “SEAT BELT” of this Service Manual.

WARNING:

Always observe the following items for preventing accidental activation.

- **To avoid rendering the SRS inoperative, which could increase the risk of personal injury or death in the event of a collision that would result in air bag inflation, all maintenance must be performed by an authorized NISSAN/INFINITI dealer.**
- **Improper maintenance, including incorrect removal and installation of the SRS, can lead to personal injury caused by unintentional activation of the system. For removal of Spiral Cable and Air Bag Module, see “SRS AIR BAG”.**
- **Never use electrical test equipment on any circuit related to the SRS unless instructed to in this Service Manual. SRS wiring harnesses can be identified by yellow and/or orange harnesses or harness connectors.**

PRECAUTIONS WHEN USING POWER TOOLS (AIR OR ELECTRIC) AND HAMMERS

WARNING:

Always observe the following items for preventing accidental activation.

- **When working near the Air Bag Diagnosis Sensor Unit or other Air Bag System sensors with the ignition ON or engine running, never use air or electric power tools or strike near the sensor(s) with a hammer. Heavy vibration could activate the sensor(s) and deploy the air bag(s), possibly causing serious injury.**
- **When using air or electric power tools or hammers, always switch the ignition OFF, disconnect the battery, and wait at least 3 minutes before performing any service.**

General Precautions

INFOID:0000000006207793

- **Turn ignition switch OFF and disconnect the battery cable from the negative terminal before connecting or disconnecting the A/T assembly connector. Because battery voltage is applied to TCM even if ignition switch is turned OFF.**

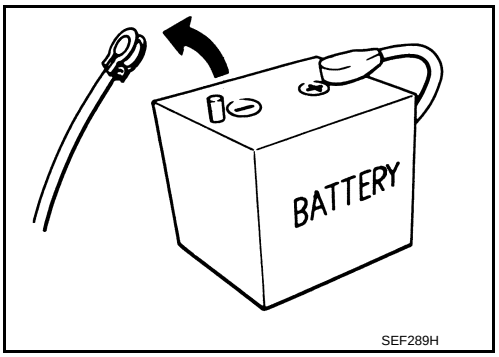

- **Perform “DTC (Diagnostic Trouble Code) CONFIRMATION PROCEDURE” after performing each TROUBLE DIAGNOSIS. If the repair is completed DTC should not be displayed in the “DTC CONFIRMATION PROCEDURE”.**
- Always use the specified brand of ATF. Refer to MA-13, "Fluids and Lubricants".
- Use lint-free paper not cloth rags during work.
- Dispose of the waste oil using the methods prescribed by law, ordinance, etc. after replacing the ATF.
- Before proceeding with disassembly, thoroughly clean the outside of the transmission. It is important to prevent the internal parts from becoming contaminated by dirt or other foreign matter.

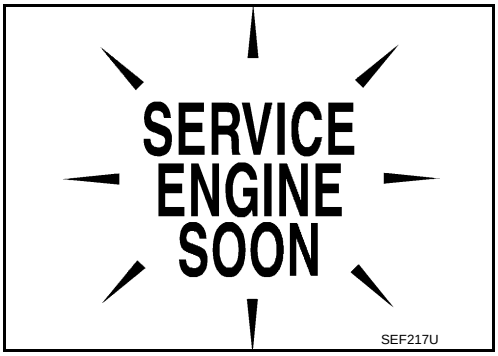

- Disassembly should be done in a clean work area.
- Use lint-free paper or towels for wiping parts clean. Common shop rags can leave fibers that could interfere with the operation of the transmission.
- Place disassembled parts in order for easier and proper assembly.
- All parts should be carefully cleaned with a general purpose, non-flammable solvent before inspection or reassembly.
- Gaskets, seals and O-rings should be replaced any time the A/T is disassembled.
- It is very important to perform functional tests whenever they are indicated.
- The valve body contains precision parts and requires extreme care when parts are removed and serviced. Place disassembled valve body parts in order for easier and proper assembly. Care will also prevent springs and small parts from becoming scattered or lost.
- Properly installed valves, sleeves, plugs, etc. will slide along bores in valve body under their own weight.
- Before assembly, apply a coat of recommended ATF to all parts. Apply petroleum jelly to protect O-rings and seals, or hold bearings and washers in place during assembly. Never use grease.
- Extreme care should be taken to avoid damage to O-rings, seals and gaskets when assembling.
- Clean or replace ATF cooler if excessive foreign material is found in oil pan or clogging strainer. Refer to TM-264, "Service Notice or Precaution".
- When the A/T drain plug is removed, only some of the ATF is drained. Old ATF will remain in torque converter and ATF cooling system.
  Always follow the procedures under “Changing” when changing ATF. Refer to TM-267, "Changing".
- Occasionally, the parking gear may be locked with the torque insufficiently released, when stopping the vehicle by shifting the selector lever from “D” or “R” to “P” position with the brake pedal depressed.
  In this case, the shock with a thud caused by the abrupt release of torque may occur when shifting the selector lever from “P” position to other positions.
  However, this symptom is not a malfunction which results in the damage of parts.

Service Notice or Precaution

INFOID:0000000006207794

ATF COOLER SERVICE

If ATF contains frictional material (clutches, bands, etc.), or if an A/T is repaired, overhauled, or replaced, inspect and clean the A/T fluid cooler mounted in the radiator or replace the radiator. Flush cooler lines using cleaning solvent and compressed air after repair. For A/T fluid cooler cleaning procedure, refer to TM-270, "Cleaning". For radiator replacement, refer to CO-15, "Exploded View".

PREPARATION

PREPARATION

Special Service Tool

INFOID:0000000006833971

The actual shapes of Kent-Moore tools may differ from those of special service tools illustrated here.

Tool number (Kent-Moore No.) Tool name	Description
ST33400001 (J-26082) Drift a: 60 mm (2.36 in) dia. b: 47 mm (1.85 in) dia. 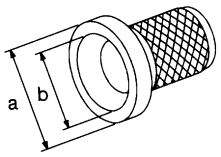 NT086	• Installing rear oil seal (2WD) • Installing oil pump housing oil seal
KV31102400 (J-34285 and J-34285-87) Clutch spring compressor a: 320 mm (12.60 in) b: 174 mm (6.85 in) 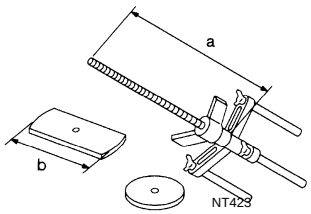 NT423	• Installing reverse brake return spring retainer • Removing and installing 2346 brake spring retainer
KV31103800 Clutch spring compressor 1. M12×1.75P 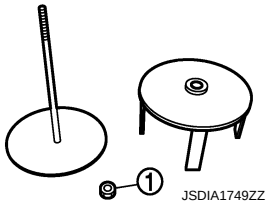 JSDIA1749ZZ	Removing and installing front brake spring retainer
ST25850000 (J-25721-A) Sliding hammer a: 179 mm (7.05 in) b: 70 mm (2.76 in) c: 40 mm (1.57 in) d: M12X1.75P 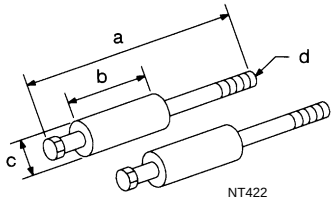 NT422	Remove oil pump assembly

Commercial Service Tool

INFOID:0000000006207795

Tool name	Description
Power tool 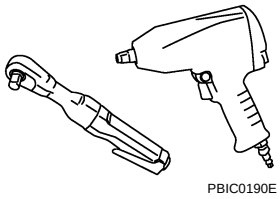 PBIC0190E	Loosening bolts and nuts
Drift a: 22 mm (0.87 in) dia. 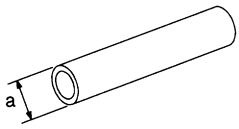 NT083	Installing manual shaft oil seals
Drift a: 64 mm (2.52 in) dia. 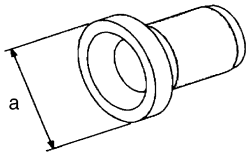 SCIA5338E	Installing rear oil seal (AWD)
Pin punch a: 4 mm (0.16 in) dia. 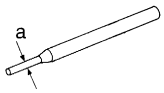 NT410	Remove retaining pin
1. 315268E000* O-ring 2. 310811EA5A* Charging pipe 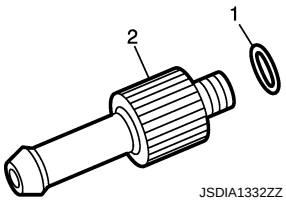 JSDIA1332ZZ	A/T fluid changing and adjustment

*: Always check with the Parts Department for the latest parts information.

PERIODIC MAINTENANCE

A/T FLUID

Inspection

INFOID:0000000006384219

FLUID LEAKAGE

- Check transmission surrounding area (oil seal and plug etc.) for fluid leakage.
- If anything is found, repair or replace damaged parts and adjust A/T fluid level. Refer to TM-269, "Adjustment".

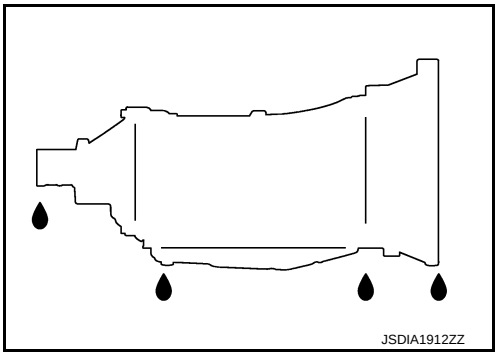

Changing

INFOID:0000000006207796

Recommended fluid
Fluid capacity : Refer to TM-407, "General Specification".

CAUTION:

- **Use only Genuine NISSAN Matic S ATF. Never mix with other ATF.**
- **Using ATF other than Genuine NISSAN Matic S ATF will cause deterioration in driveability and A/T durability, and may damage the A/T, which is not covered by the INFINITI new vehicle limited warranty.**
- **When filling ATF, be careful not to scatter heat generating parts such as exhaust.**

1. Step 1

a. Install the O-ring (315268E000) (A) to the charging pipe (310811EA5A) (B).

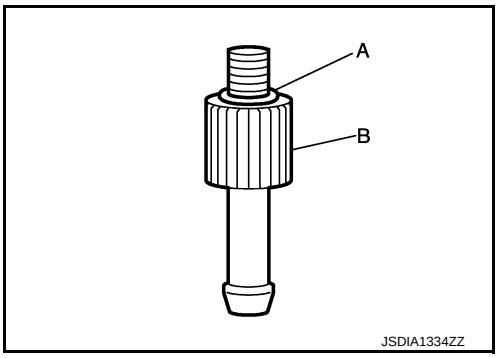

2. Step 2

a. Use CONSULT-III to check that the ATF temperature is 40°C (104°F) or less.
b. Lift up the vehicle.
c. Remove the drain plug from the oil pan, and then drain the ATF.
d. When the ATF starts to drip, temporarily tighten the drain plug to the oil pan.
NOTE:
Never replace drain plug and drain plug gasket with new ones yet.
e. Remove overflow plug from oil pan.

f. Install the charging pipe (A) to the overflow plug hole.
CAUTION:
Tighten the charging pipe by hand.

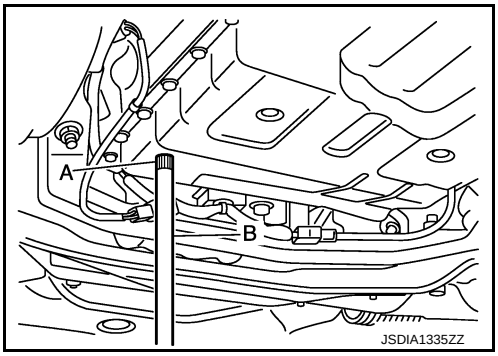

g. Install the bucket pump hose (B) to the charging pipe.
CAUTION:
Insert the bucket pump hose all the way to the end of the charging pipe.

h. Fill approximately 3 liters (3-1/8 US qt, 2-5/8 lmp qt) of the ATF.

i. Remove the bucket pump hose to remove the charging pipe, and then temporarily tighten the overflow plug to the oil pan.
CAUTION:
Quickly perform the procedure to avoid ATF leakage from the oil pan.

j. Lift down the vehicle.

k. Start the engine and wait for approximately 3 minutes.

l. Stop the engine.

3. Step 3

a. Repeat “Step 2”.

4. Final Step

a. Use CONSULT-III to check that the ATF temperature is 40°C (104°F) or less.

b. Lift up the vehicle.

c. Remove the drain plug from the oil pan, and then drain the ATF.

d. When the ATF starts to drip, tighten the drain plug to the oil pan to the specified torque. Refer to TM-283, "Exploded View".
CAUTION:
Never reuse drain plug and drain plug gasket.

e. Remove overflow plug from oil pan.

f. Install the charging pipe (A) to the overflow plug hole.
CAUTION:
Tighten the charging pipe by hand.

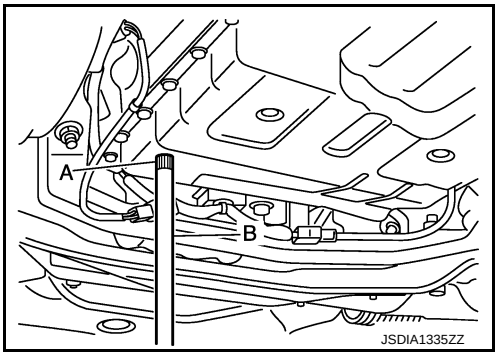

g. Install the bucket pump hose (B) to the charging pipe.
CAUTION:
Insert the bucket pump hose all the way to the end of the charging pipe.

h. Fill approximately 3 liters (3-1/8 US qt, 2-5/8 lmp qt) of the ATF.

i. Remove the bucket pump hose to remove the charging pipe, and then temporarily tighten the overflow plug to the oil pan.
CAUTION:
Quickly perform the procedure to avoid ATF leakage from the oil pan.

j. Lift down the vehicle.

k. Start the engine.

l. Make the ATF temperature approximately 40°C (104°F).
NOTE:
The ATF level is greatly affected by the temperature. Always check the ATF temperature on “ATF TEMP 1” of “Data Monitor” using CONSULT-III.

m. Park vehicle on level surface and set parking brake.

n. Shift the selector lever through each gear position. Leave selector lever in “P” position.

o. Lift up the vehicle when the ATF temperature reaches 40°C (104°F), and then remove the overflow plug from the oil pan.

p. When the ATF starts to drip, tighten the overflow plug to the oil pan to the specified torque. Refer to TM-283, "Exploded View".
CAUTION:
Never reuse overflow plug.

Adjustment

INFOID:0000000006207797

Recommended fluid	: Refer to TM-407, "General Specification".
Fluid capacity	

CAUTION:

- **Use only Genuine NISSAN Matic S ATF. Never mix with other ATF.**
- **Using ATF other than Genuine NISSAN Matic S ATF will cause deterioration in driveability and A/T durability, and may damage the A/T, which is not covered by the INFINITI new vehicle limited warranty.**
- **When filling ATF, be careful not to scatter heat generating parts such as exhaust.**

1. Install the O-ring (315268E000) (A) to the charging pipe (310811EA5A) (B).
2. Start the engine.
3. Make the ATF temperature approximately 40°C (104°F).
   NOTE:
   The ATF level is greatly affected by the temperature. Always check the ATF temperature on “ATF TEMP 1” of “Data Monitor” using CONSULT-III.
4. Park vehicle on level surface and set parking brake.
5. Shift the selector lever through each gear position. Leave selector lever in “P” position.
6. Lift up the vehicle.
7. Check the ATF leakage from transmission.
8. Remove overflow plug from oil pan.
9. Install the charging pipe (A) to the overflow plug hole.
   CAUTION:
   Tighten the charging pipe by hand.
10. Install the bucket pump hose (B) to the charging pipe.
    CAUTION:
    Insert the bucket pump hose all the way to the end of the charging pipe.
11. Fill approximately 0.5 liters (1/2 US qr, 1/2 lmp qt) of the ATF.
12. Check that the ATF leaks when removing the charging pipe and the bucket pump hose. If the ATF does not leak, refill the ATF.
13. When the ATF starts to drip, tighten the overflow plug to the oil pan to the specified torque. Refer to TM-283, "Exploded View".
    CAUTION:
    Never reuse overflow plug.

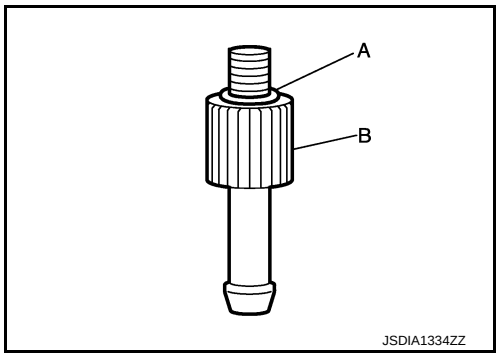

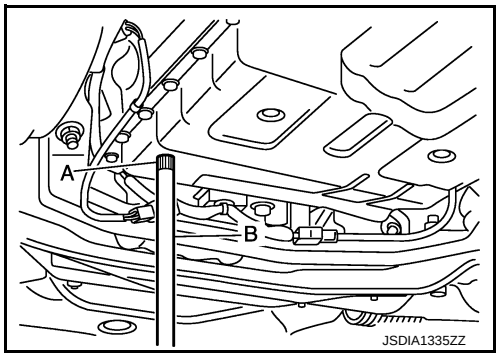

A/T FLUID COOLER

Cleaning

INFOID:0000000006207798

Whenever an A/T is replaced, the A/T fluid cooler mounted in the radiator must be inspected and cleaned.
Metal debris and friction material, if present, can become trapped in the A/T fluid cooler. This debris can contaminate the newly serviced A/T or, in severe cases, can block or restrict the flow of ATF. In either case, malfunction of the newly serviced A/T may result.
Debris, if present, may build up as ATF enters the cooler inlet. It will be necessary to back flush the cooler through the cooler outlet in order to flush out any built up debris.

CLEANING PROCEDURE

1. Position an oil pan under the A/T inlet and outlet cooler hoses.
2. Identify the inlet and outlet fluid cooler hoses.
3. Disconnect the A/T fluid cooler inlet and outlet rubber hoses from the steel cooler tubes or by-pass valve.
   NOTE:
   Replace the cooler hoses if rubber material from the hose remains on the tube fitting.
4. Allow any ATF that remains in the cooler hoses to drain into the oil pan.

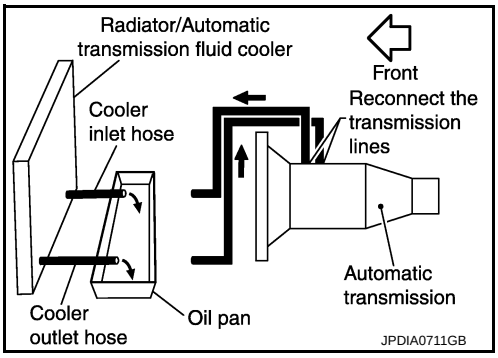

5. Insert the extension adapter hose of a can of Transmission Cooler Cleaner (Nissan P/N 999MP-AM006) into the cooler outlet hose.
   CAUTION:
   - **Wear safety glasses and rubber gloves when spraying the Transmission Cooler Cleaner.**
   - **Spray Transmission Cooler Cleaner only with adequate ventilation.**
   - **Avoid contact with eyes and skin.**
   - **Never breathe vapors or spray mist.**
6. Hold the hose and can as high as possible and spray Transmission Cooler Cleaner in a continuous stream into the cooler outlet hose until ATF flows out of the cooler inlet hose for 5 seconds.

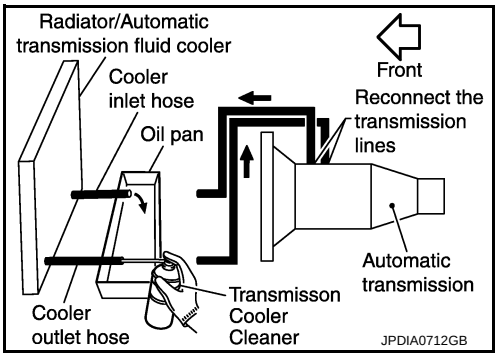

7. Insert the tip of an air gun into the end of the cooler outlet hose.
8. Wrap a shop rag around the air gun tip and of the cooler outlet hose.
9. Blow compressed air regulated to 5 to 9 kg/cm^2 (71 to 128 psi) through the cooler outlet hose for 10 seconds to force out any remaining ATF.
10. Repeat steps 5 through 9 three additional times.
11. Position an oil pan under the banjo bolts that connect the A/T fluid cooler steel lines to the A/T.
12. Remove the banjo bolts.

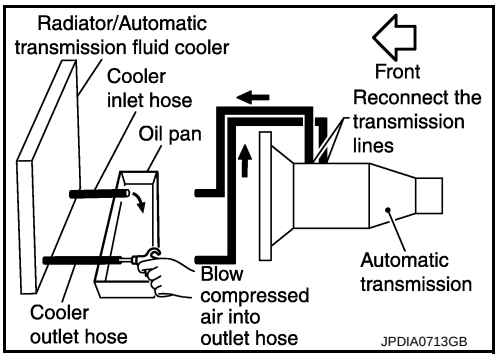

13. Flush each steel line from the cooler side back toward the A/T by spraying Transmission Cooler Cleaner in a continuous stream for 5 seconds.
14. Blow compressed air regulated to 5 to 9 kg/cm^2 (71 to 128 psi) through each steel line from the cooler side back toward the A/T for 10 seconds to force out any remaining ATF.
15. Ensure all debris is removed from the steel cooler lines.
16. Ensure all debris is removed from the banjo bolts and fittings.
17. Perform “DIAGNOSIS PROCEDURE”.

DIAGNOSIS PROCEDURE

NOTE:
Insufficient cleaning of the cooler inlet hose exterior may lead to inaccurate debris identification.

1. Position an oil pan under the A/T inlet and outlet cooler hoses.
2. Clean the exterior and tip of the cooler inlet hose.
3. Insert the extension adapter hose of a can of Transmission Cooler Cleaner (Nissan P/N 999MP-AM006) into the cooler outlet hose.
   CAUTION:
   - **Wear safety glasses and rubber gloves when spraying the Transmission Cooler Cleaner.**
   - **Spray Transmission Cooler Cleaner only with adequate ventilation.**
   - **Avoid contact with eyes and skin.**
   - **Never breathe vapors or spray mist.**
4. Hold the hose and can as high as possible and spray Transmission Cooler Cleaner in a continuous stream into the cooler outlet hose until ATF flows out of the cooler inlet hose for 5 seconds.

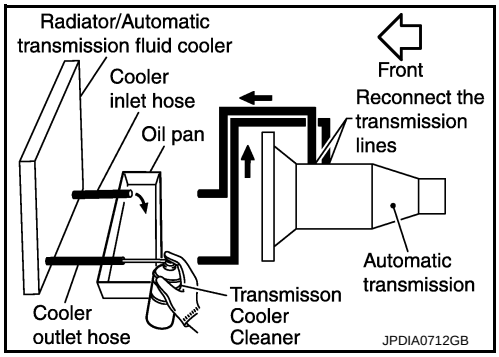

5. Tie a common white, basket-type coffee filter to the end of the cooler inlet hose.

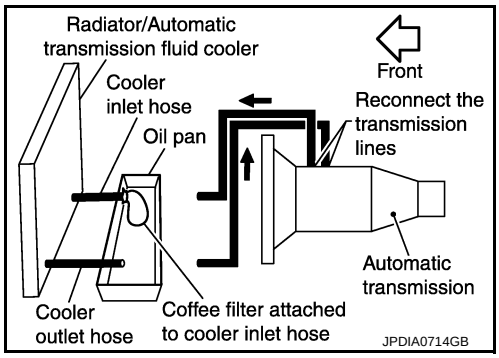

6. Insert the tip of an air gun into the end of the cooler outlet hose.
7. Wrap a shop rag around the air gun tip and end of cooler outlet hose.
8. Blow compressed air regulated to 5 to 9 kg/cm^2 (71 to 128 psi) through the cooler outlet hose to force any remaining ATF into the coffee filter.
9. Remove the coffee filter from the end of the cooler inlet hose.
10. Perform “INSPECTION PROCEDURE”.

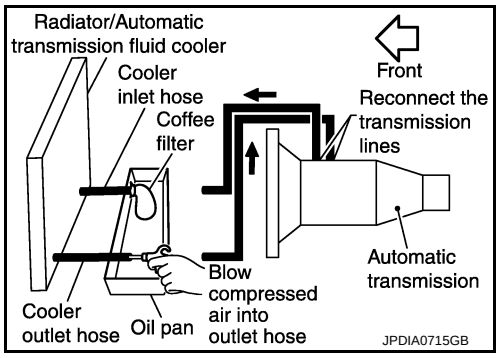

INSPECTION PROCEDURE

1. Inspect the coffee filter for debris.

a. If small metal debris less than 1 mm (0.040 in) in size or metal powder is found in the coffee filter, this is normal. If normal debris is found, the A/T fluid cooler/radiator can be re-used and the procedure is ended.

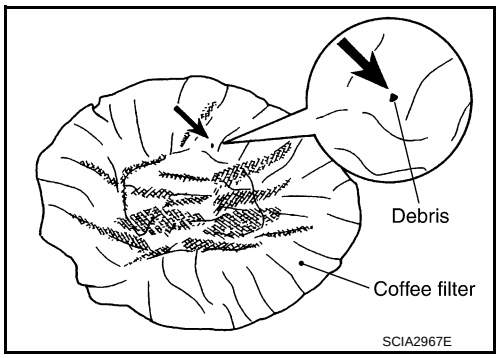

b. If one or more pieces of debris are found that are over 1 mm (0.040 in) in size and/or peeled clutch facing material is found in the coffee filter, the A/T fluid cooler is not serviceable. The A/T fluid cooler/radiator must be replaced and the inspection procedure is ended. Refer to CO-15, "Exploded View".

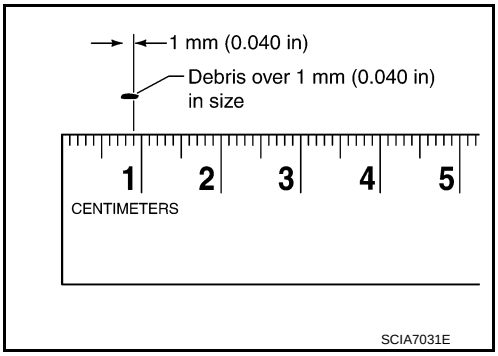

Inspection

INFOID:0000000006207799

After performing all procedures, ensure that all remaining oil is cleaned from all components.

STALL TEST

Inspection and Judgment

INFOID:0000000006207800

INSPECTION

1. Inspect the amount of engine oil. Replenish the engine oil if necessary.
2. Drive for about 10 minutes to warm up the vehicle so that the A/T fluid temperature is 50 to 80°C (122 to 176°F). Inspect the amount of ATF. Replenish if necessary.
3. Securely engage the parking brake so that the tires do not turn.
4. Start the engine, apply foot brake, and place selector lever in “D” position.
5. Gradually press down the accelerator pedal while holding down the foot brake.
6. Quickly read off the stall speed, and then quickly release the accelerator pedal.
   CAUTION:
   Never hold down the accelerator pedal for more than 5 seconds during this test.

   Stall speed : Refer to TM-408, "Stall Speed".
7. Shift the selector lever to “N” position.
8. Cool down the ATF.
   CAUTION:
   Run the engine at idle for at least 1 minute.
9. Repeat steps 5 through 8 with selector lever in “R” position.

JUDGMENT OF STALL TEST

	Selector lever position		Possible location of malfunction
	“D” and “M”	“R”	
Stall speed	H	O	• Low brake • 1st one-way clutch • 2nd one-way clutch
	O	H	• Reverse brake • 1st one-way clutch • 2nd one-way clutch
	L	L	• Engine and torque converter one-way clutch
	H	H	• Line pressure low

O: Stall speed within standard value position

H: Stall speed higher than standard value

L: Stall speed lower than standard value

Stall test standard value position

Does not shift-up “D” or “M” position 1 → 2	Slipping in 2GR, 3GR 4GR or 6GR	2346 brake slippage
Does not shift-up “D” or “M” position 2 → 3	Slipping in 3GR, 4GR or 5GR	Direct clutch slippage
Does not shift-up “D” or “M” position 3 → 4	Slipping in 4GR, 5GR, 6GR or 7GR	High and low reverse clutch slippage
Does not shift-up “D” or “M” position 4 → 5	Slipping in 5GR, 6GR or 7GR	Input clutch slippage
Does not shift-up “D” or “M” position 5 → 6	Slipping in 2GR, 3GR, 4GR or 6GR	2346 brake slippage
Does not shift-up “D” or “M” position 6 → 7	Slipping in 7GR	Front brake slippage

A/T POSITION

Inspection and Adjustment

INFOID:0000000006207801

INSPECTION

1. Place selector lever in “P” position, and turn ignition switch ON (engine stop).
2. Check that selector lever can be shifted to other than “P” position when brake pedal is depressed. Also check that selector lever can be shifted from “P” position only when brake pedal is depressed.
3. Shift the selector lever and check for excessive effort, sticking, noise or rattle.
4. Confirm that the selector lever stops at each position by feeling the engagement when it is moved through all the positions. Check whether or not the actual position the selector lever matches the position shown by the shift position indicator and the A/T body.
5. The method of operating the lever to individual positions correctly is shown in the figure.

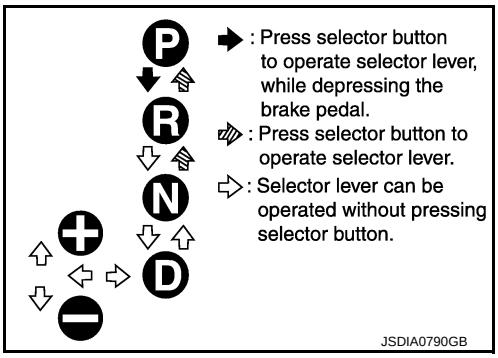

6. When selector button is pressed in “P”, “R”, or “N” position without applying forward/backward force to selector lever, check button operation for sticking.
7. Confirm that the back-up lamps illuminate only when lever is placed in the “R” position. Confirm that the back-up lamps do not illuminate when selector lever is pushed against “R” position in the “P” or “N” position.
8. Confirm that the engine can only be started with the selector lever in the “P” and “N” positions. (With selector lever in the “P” position, engine can be started even when selector lever is moved forward and backward.)
9. Make sure that A/T is locked completely in “P” position.
10. DS mode must be indicated on the combination meter when the selector lever is shifted to the manual shift gate. When the selector lever is shifted to the “+” or “–” side in the DS mode, manual mode should be indicated on the combination meter.
    In addition, a set shift position must be changed when the selector lever is shifted to the “+” or “–” side in the manual mode. (Only while driving.)

ADJUSTMENT

1. Loosen nut (⬅).
   - 2WD models

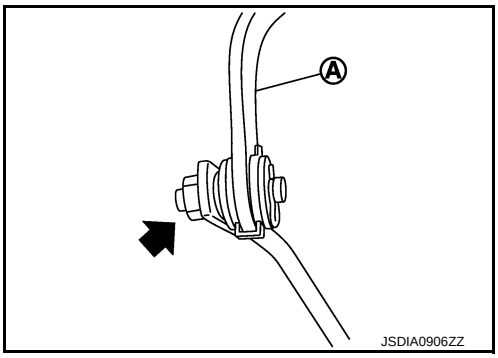

   - AWD models

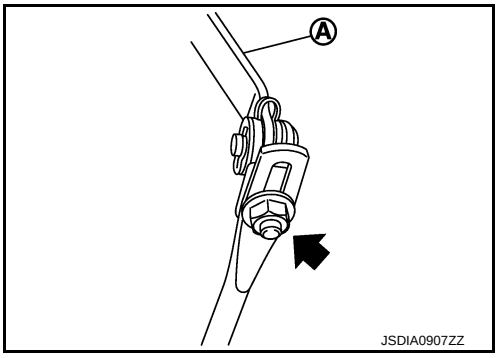

2. Place manual lever and selector lever in “P” position.
3. While pressing lower lever (A) toward rear of vehicle (in “P” position direction), tighten nut to specified torque. Refer to TM-276, "2WD : Exploded View" (2WD) or TM-278, "AWD : Exploded View" (AWD).

CAUTION:
Be careful not to touch the control rod while pressing lower lever of A/T shift selector assembly.
NOTE:
Press lower lever of A/T shift selector assembly with a force of 9.8 N (approximately 1 kg, 2.2 lb).

REMOVAL AND INSTALLATION

A/T SHIFT SELECTOR

2WD

2WD : Exploded View

INFOID:0000000006207803

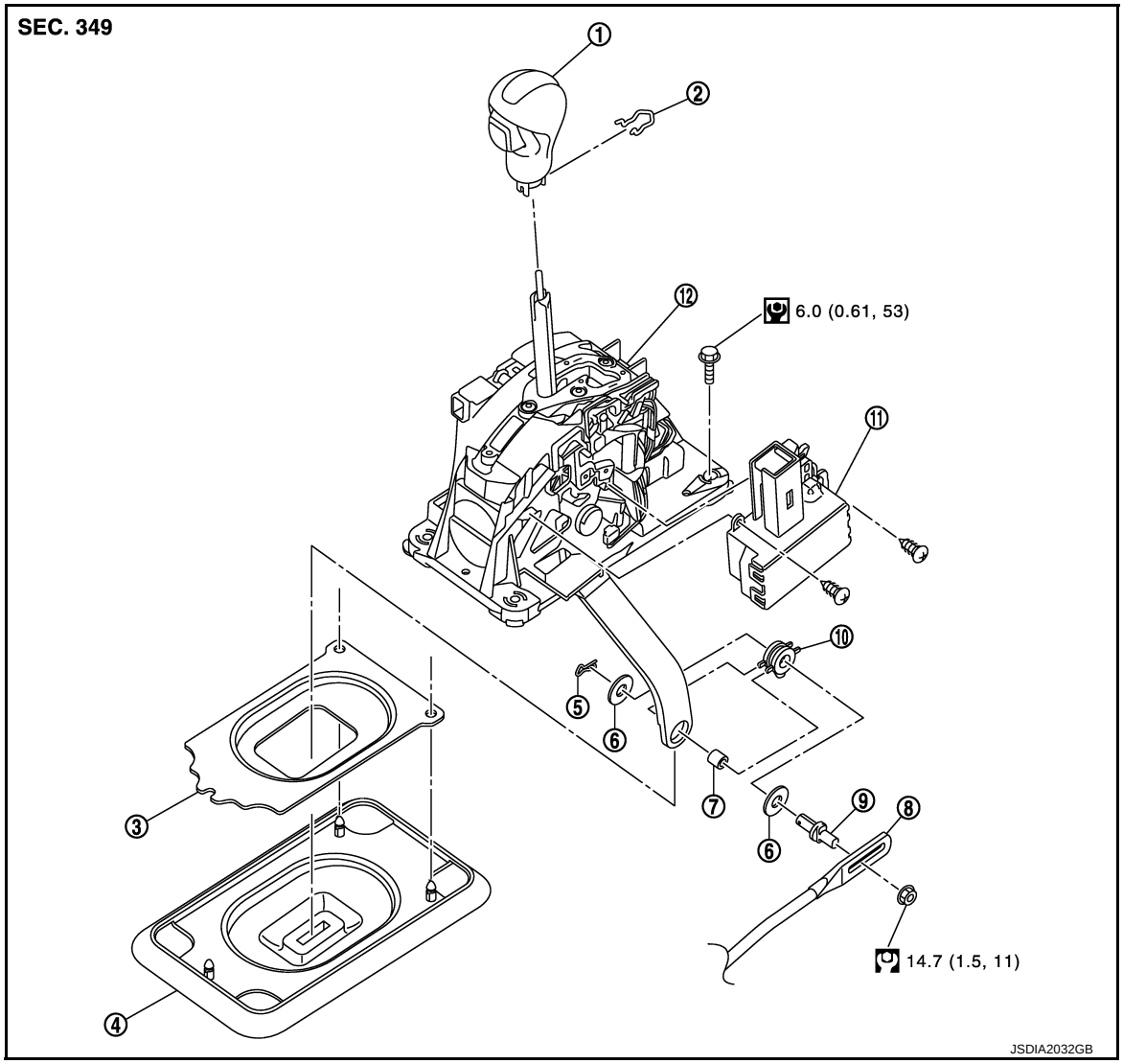

1.	Selector lever knob	2.	Lock pin	3.	Dust cover plate
4.	Dust cover	5.	Snap pin	6.	Washer
7.	Collar	8.	Control rod	9.	Pivot pin
10.	Insulator	11.	Shift lock unit	12.	A/T shift selector assembly

: Apply multi-purpose grease.

Refer to GI-4, "Components" for symbols not described on the above.

2WD : Removal and Installation

INFOID:0000000006207804

REMOVAL

1. Shift the selector lever to “P” position.
2. Remove control rod from A/T shift selector assembly.
3. Shift the selector lever to “N” position.

4. Remove knob cover (A) below selector lever downward.
5. Pull lock pin (1) out of selector lever knob (2).
6. Remove selector lever knob.
7. Remove center console assembly. Refer to IP-34, "A/T MODELS : Exploded View".
   CAUTION:
   When disconnecting selector lever position indicator connector from shift position switch, never twist or apply an excessive load to the connector.
8. Remove rear ventilator duct 2. Refer to VTL-10, "Exploded View".
9. Disconnect A/T shift selector connector and main harness.
10. Move passenger's seat to the end.
11. Shift the selector lever to "P" position.
12. Remove A/T shift selector assembly mounting bolts.
13. Slightly lift the A/T shift selector assembly (1) and slide it rightward. Then pull it out in the diagonally right direction.
14. Remove snap pin, washers, insulator, collar and pivot pin from A/T shift selector assembly.
15. Remove dust cover and dust cover plate from A/T shift selector assembly.
16. Remove dust cover from dust cover plate.
17. Remove shift lock unit from A/T shift selector assembly.

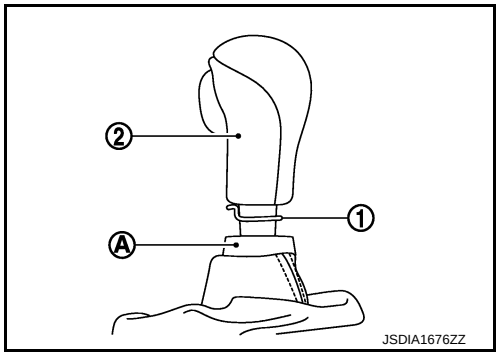

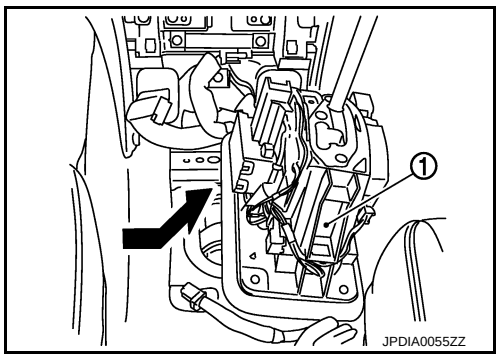

INSTALLATION

Note the following, and install in the reverse order of removal.

CAUTION:

- **Apply multi-purpose grease on the pin surface (that slides after installing a collar) of the pivot pin.**
- **Apply multi-purpose grease on the surface that the shift lock unit plate slides vertically.**

Refer to the followings when installing the selector lever knob to the A/T shift selector assembly.

1. Install the lock pin to the selector lever knob.
2. Insert the shift lever knob into the shift lever until it clicks.
   CAUTION:
   - **Install it straight, and never tap or apply any shock to install it.**
   - **Never press selector button.**

2WD : Inspection and Adjustment

INFOID:0000000006207805

INSPECTION AFTER INSTALLATION

Check A/T positions after adjusting A/T positions. Refer to TM-274, "Inspection and Adjustment".

ADJUSTMENT AFTER INSTALLATION

Adjust A/T positions. Refer to TM-274, "Inspection and Adjustment".

AWD

AWD : Exploded View

INFOID:0000000006207806

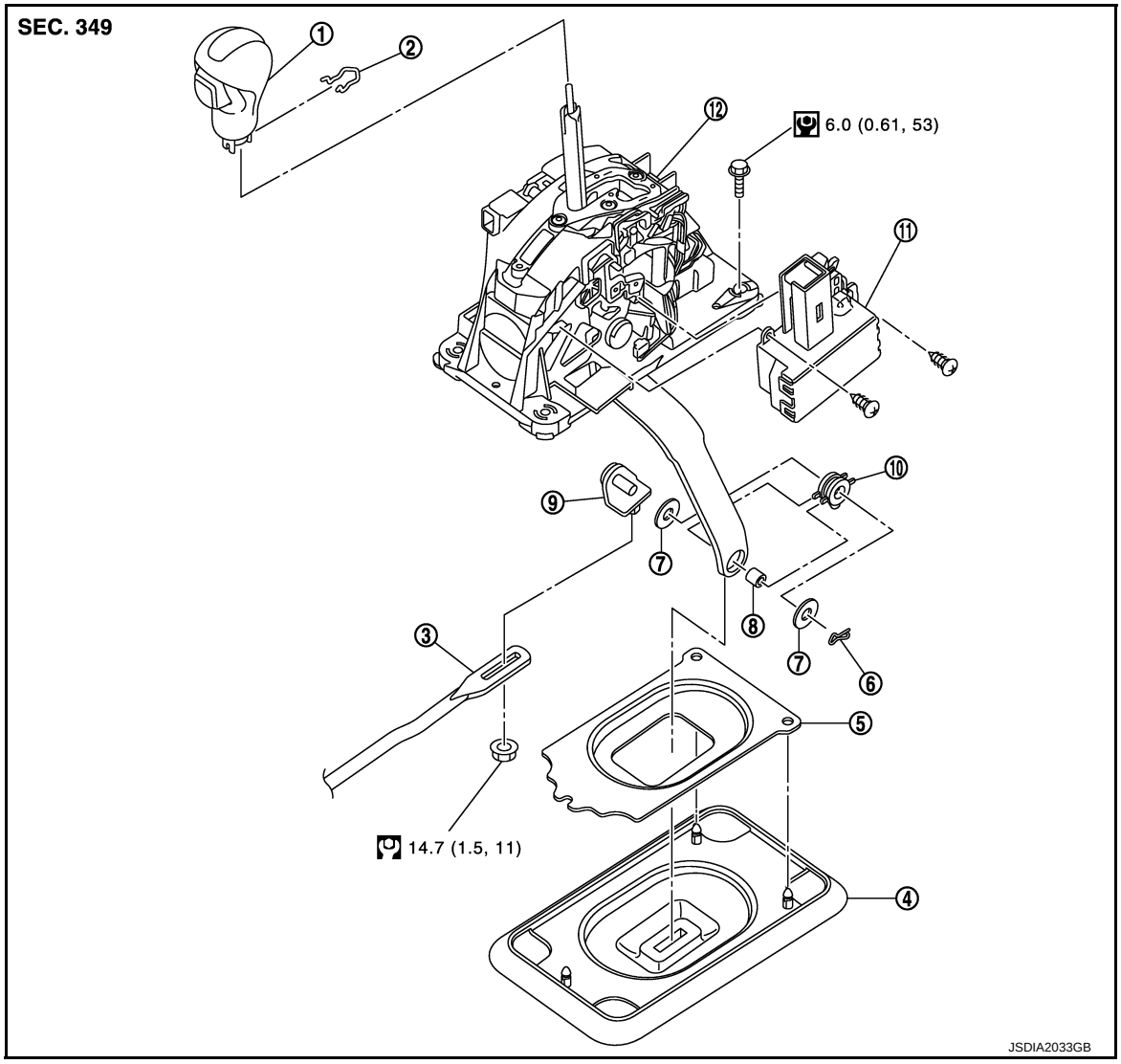

1.	Selector lever knob	2.	Lock pin	3.	Control rod
4.	Dust cover	5.	Dust cover plate	6.	Snap pin
7.	Washer	8.	Collar	9.	Pivot pin
10.	Insulator	11.	Shift lock unit	12.	A/T shift selector assembly

: Apply multi-purpose grease.

Refer to GI-4, "Components" for symbols not described on the above.

AWD : Removal and Installation

INFOID:0000000006207807

REMOVAL

1. Shift the selector lever to “P” position.
2. Remove control rod from A/T shift selector.
3. Shift the selector lever to “N” position.

4. Remove knob cover (A) below selector lever downward.
5. Pull lock pin (1) out of selector lever knob (2).
6. Remove selector lever knob.
7. Remove center console assembly. Refer to IP-34, "A/T MODELS : Exploded View".
   CAUTION:
   When disconnecting selector lever position indicator connector from shift position switch, never twist or apply an excessive load to the connector.
8. Remove rear ventilator duct 2. Refer to VTL-10, "Exploded View".
9. Disconnect A/T shift selector connector and main harness.
10. Move passenger's seat to the end.
11. Shift the selector lever to "P" position.
12. Remove A/T shift selector assembly mounting bolts.
13. Slightly lift the A/T shift selector assembly (1) and slide it rightward. Then pull it out in the diagonally right direction.
14. Remove snap pin, washers, insulator, collar and pivot pin from A/T shift selector assembly.
15. Remove dust cover and dust cover plate from A/T shift selector assembly.
16. Remove dust cover from dust cover plate.
17. Remove shift lock unit from A/T shift selector assembly.

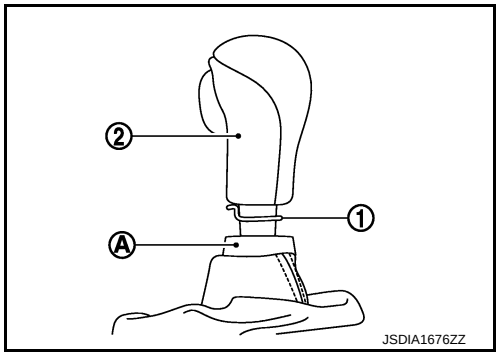

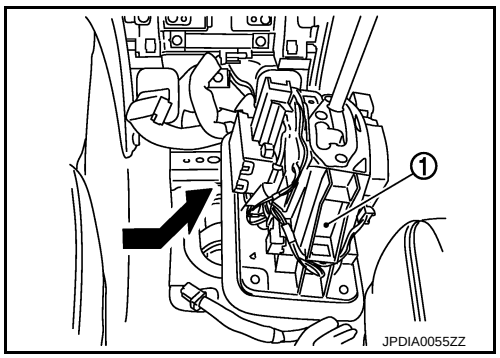

INSTALLATION

Note the following, and install in the reverse order of removal.

CAUTION:

- **Apply multi-purpose grease on the pin surface (that slides after installing a collar) of the pivot pin.**
- **Apply multi-purpose grease on the surface that the shift lock unit plate slides vertically.**

Refer to the followings when installing the selector lever knob to the A/T shift selector assembly.

1. Install the lock pin to the selector lever knob.
2. Insert the shift lever knob into the shift lever until it clicks.
   CAUTION:
   - **Install it straight, and never tap or apply any shock to install it.**
   - **Never press selector button.**

AWD : Inspection and Adjustment

INFOID:0000000006207808

INSPECTION AFTER INSTALLATION

Check A/T positions after adjusting A/T positions. Refer to TM-274, "Inspection and Adjustment".

ADJUSTMENT AFTER INSTALLATION

Adjust A/T positions. Refer to TM-274, "Inspection and Adjustment".

CONTROL ROD

Exploded View

INFOID:0000000006207809

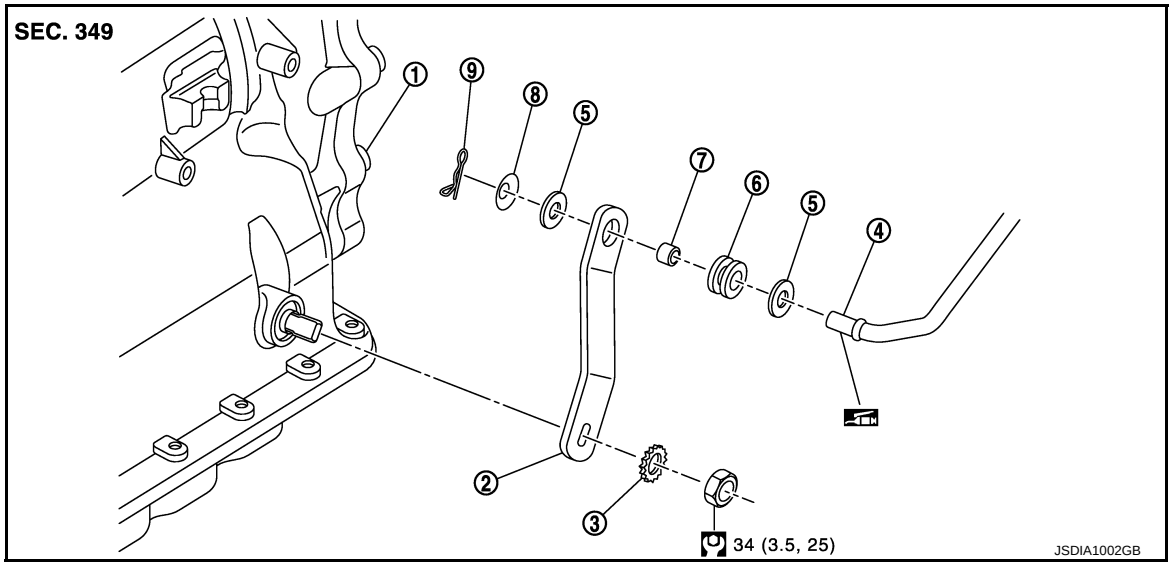

1. A/T assembly
2. Manual lever
3. Lock washer
4. Control rod
5. Washer
6. Insulator
7. Collar
8. Conical washer
9. Snap pin

: Apply multi-purpose grease.

Refer to GI-4, "Components" for symbols not described on the above.

Removal and Installation

INFOID:0000000006207810

REMOVAL

1. Shift the selector lever to “P” position.
2. Remove control rod from A/T shift selector assembly. Refer to TM-276, "2WD : Exploded View" (2WD) or TM-278, "AWD : Exploded View" (AWD).
3. Remove manual lever from A/T assembly.
4. Remove control rod from manual lever.
5. Remove insulator and collar from manual lever.

INSTALLATION

Note the following, and install in the reverse order of removal.

CAUTION:

Apply multi-purpose grease on the pin surface (that slides after installing collar) of the tip of the control rod.

Inspection and Adjustment

INFOID:0000000006207811

INSPECTION AFTER INSTALLATION

Check A/T positions after adjusting A/T positions. Refer to TM-274, "Inspection and Adjustment".

ADJUSTMENT AFTER INSTALLATION

Adjust A/T positions. Refer to TM-274, "Inspection and Adjustment".

SELECTOR LEVER POSITION INDICATOR

Removal and Installation

INFOID:0000000006485687

REMOVAL

1. Remove console finisher assembly. Refer to IP-35, "A/T MODELS : Removal and Installation".
2. Remove selector lever position indicator harness from hook of console pocket assembly.
3. Remove insert finisher (1).

: Screw

4. Remove selector lever position indicator (2).

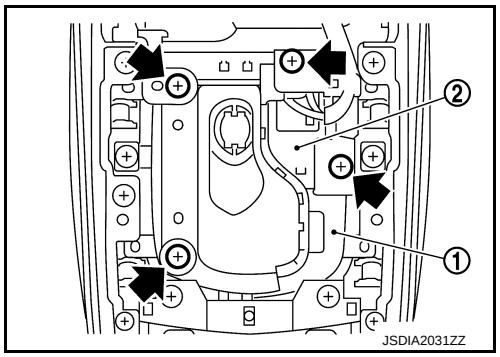

INSTALLATION

Install in the reverse order of removal.

PADDLE SHIFTER

Exploded View

INFOID:0000000006207812

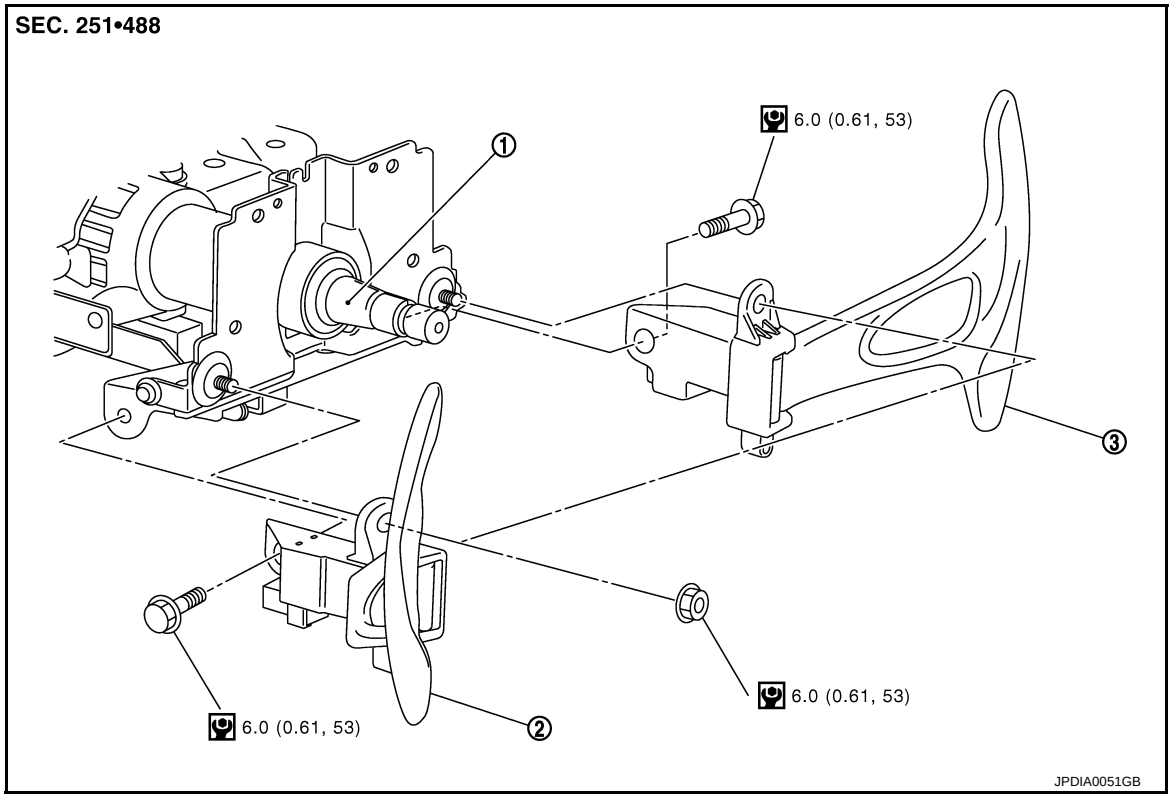

1. Steering column assembly
2. Paddle shifter (shift-down)
3. Paddle shifter (shift-up)

Refer to GI-4, "Components" for symbols in the figure.

Removal and Installation

INFOID:0000000006207813

REMOVAL

1. Remove steering column cover. Refer to IP-12, "A/T MODELS : Exploded View".
2. Disconnect paddle shifter connectors from each paddle shifter.
3. Remove paddle shifter mounting bolts and nuts.
4. Remove each paddle shifter from steering column assembly.

INSTALLATION

Install in the reverse order of removal.

CONTROL VALVE & TCM

Exploded View

INFOID:0000000006384342

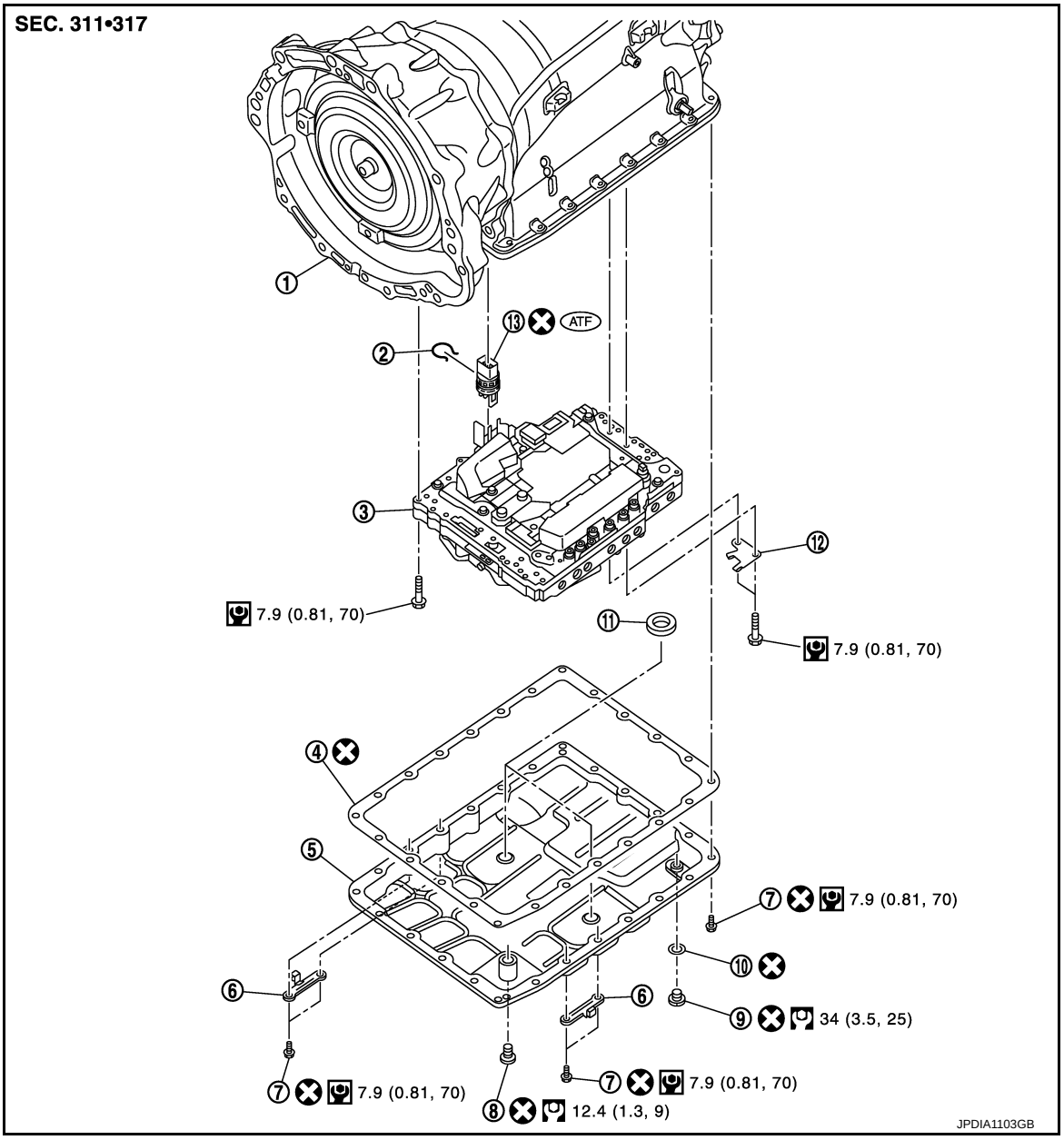

1. A/T
2. Snap ring
3. Control valve & TCM
4. Oil pan gasket
5. Oil pan
6. Clip
7. Oil pan mounting bolt
8. Overflow plug
9. Drain plug
10. Drain plug gasket
11. Magnet
12. Clip
13. Joint connector

Refer to GI-4, "Components" for symbols in the figure.

Removal and Installation

INFOID:0000000006384343

REMOVAL

1. Drain ATF through drain plug.
2. Remove exhaust mounting bracket with power tool. Refer to EX-5, "Exploded View".

3. Disconnect heated oxygen sensor 2 connectors (A).

⇦ : Vehicle front

⬅ : Bolt

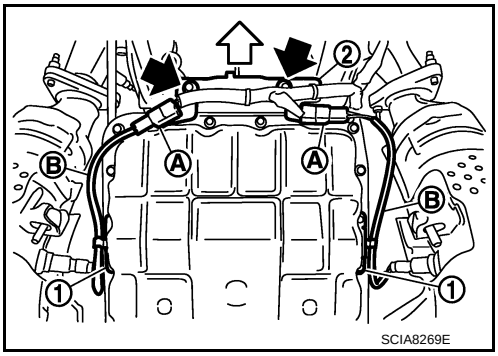

4. Remove heated oxygen sensor 2 harness (B) from clips (1).
5. Remove bracket (2) from A/T assembly. Refer to TM-310, "2WD : Exploded View" (2WD) or TM-313, "AWD : Exploded View" (4WD).
6. Remove clips (1).

⇦ : Vehicle front

⬅ : Oil pan mounting bolt

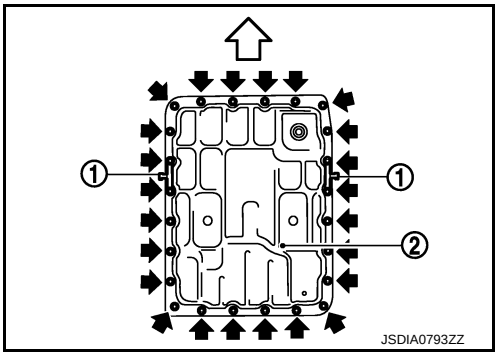

7. Remove oil pan (2) and oil pan gasket.
8. Remove magnets (1) from oil pan.

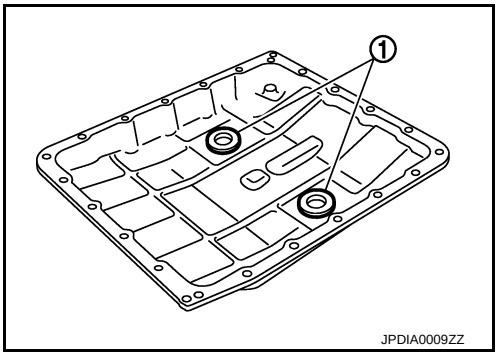

9. Remove snap ring (1) from A/T assembly connector (2).

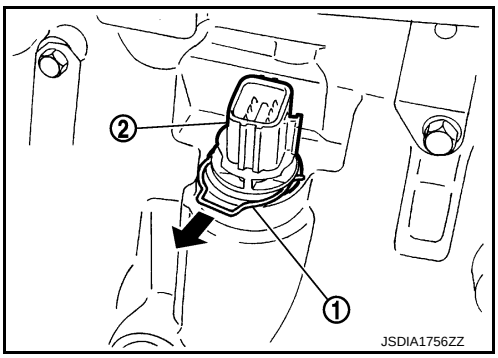

10. Push A/T assembly connector (1).

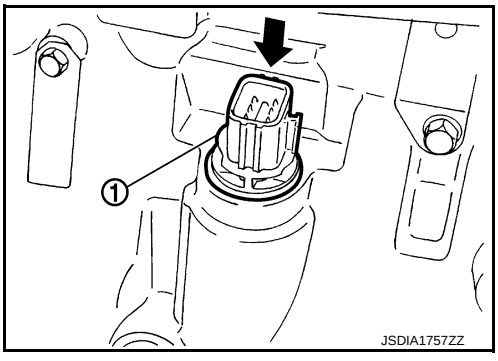

11. Disconnect output speed sensor connector (A).
CAUTION:
Be careful not to damage connector.
12. Disengage terminal clip (⬅).

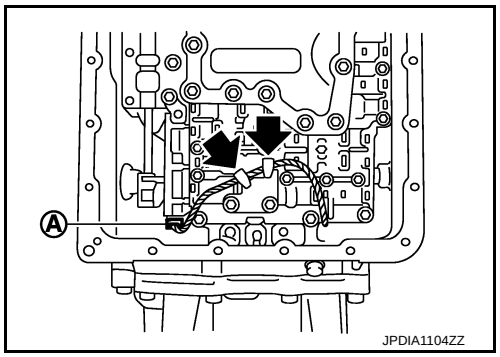

13. Remove bolts and clip (1) from the control valve & TCM.

⇦ : Vehicle front

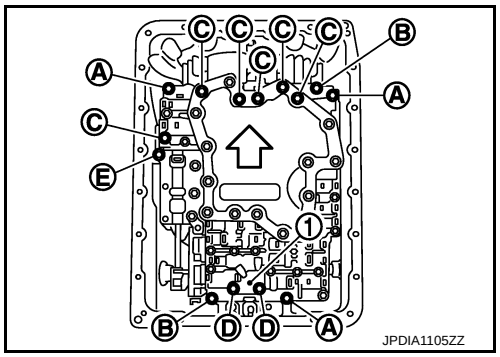

Bolt symbol	Length mm (in)	Number of bolts
A	43 (1.69)	3
B	40 (1.57)	2
C	54 (2.13)	6
D	50 (1.97)	2
E*	50 (1.97)	1

*: Reamer bolt

14. Remove the control valve & TCM from transmission case.
CAUTION:
When removing, be careful with the manual valve (1) notch and manual plate (2) height. Remove it vertically.

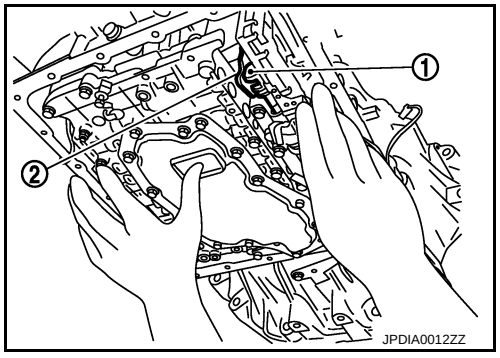

15. Remove A/T assembly connector (A) from the control valve & TCM using a flat-bladed screwdriver (B).
16. Disconnect TCM harness connector.
CAUTION:
Be careful not to damage connector.

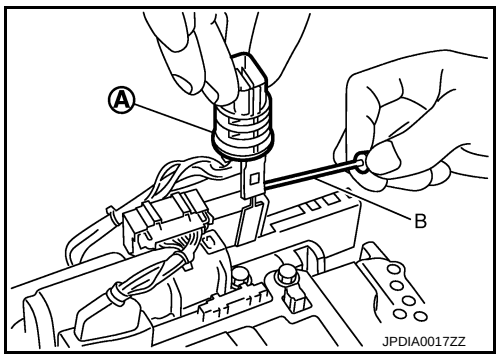

INSTALLATION

Note the following, and install in the reverse order of removal.

CAUTION:
- **Be careful not to damage connector when installing any connector.**
- **Never reuse A/T assembly connector.**
- **Apply ATF to O-ring of A/T assembly connector.**
- **Never reuse drain plug and drain plug gasket. In addition, install new drain plug and drain plug gasket after adjustment of A/T fluid filling.**
- Refer to the following when installing the control valve & TCM to transmission case.

CAUTION:

- **Make sure that input speed sensor securely installs input speed sensor holes (A).**
- **Hang down output speed sensor harness toward outside so as not to disturb installation of the control valve & TCM.**
- **Adjust joint connector of the control valve & TCM to terminal hole of transmission case.**

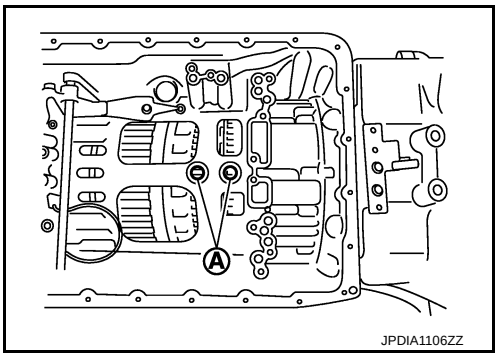

- **Assemble it so that manual valve (1) cutout is engaged with manual plate (2) projection.**

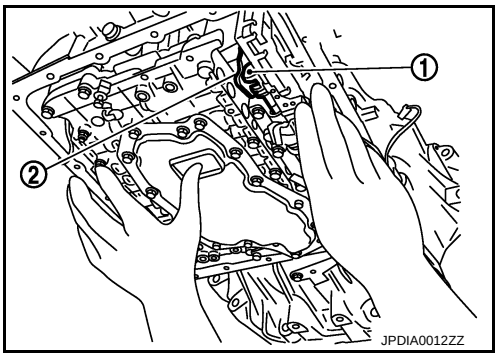

- Install bolts and clip (1) to the control valve & TCM. Tighten bolt (E) to the specified torque before tightening the other than bolts.

⇦ : Vehicle front

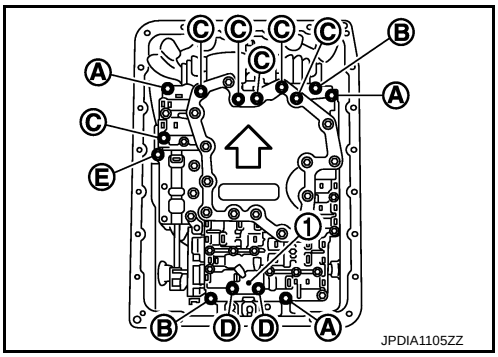

Bolt symbol	Length mm (in)	Number of bolts
A	43 (1.69)	3
B	40 (1.57)	2
C	54 (2.13)	6
D	50 (1.97)	2
E*	50 (1.97)	1

*: Reamer bolt

- Refer to the following when installing oil pan to transmission case.

CAUTION:

- **Clean foreign materials (gear wear particles) that adhere on the inside of the oil pan and on the magnet, and then assembly.**
- **Completely remove all moisture, oil and old gasket, etc. from oil pan gasket mounting surface of transmission case and oil pan.**
- **Never reuse oil pan gasket and oil pan mounting bolts.**
- **Install oil pan gasket in the direction to align hole position.**

- Tighten the oil pan mounting bolts to the specified torque in the numerical order as shown in the figure after temporarily tightening them.

⇦ : Vehicle front

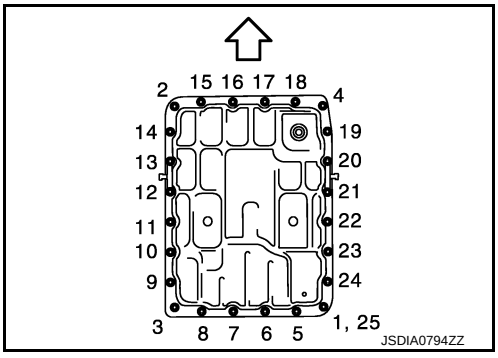

Inspection and Adjustment

INFOID:0000000006384344

INSPECTION AFTER REMOVAL

Check foreign materials in oil pan to help determine causes of malfunction. If the ATF is very dark, smells burned, or contains foreign particles, the frictional material (clutches, band) may need replacement. A tacky film that will not wipe clean indicates varnish build up. Varnish can cause valves, servo, and clutches to stick and can inhibit pump pressure.

- **If frictional material is detected, perform A/T fluid cooler cleaning. Refer to TM-270, "Cleaning".**

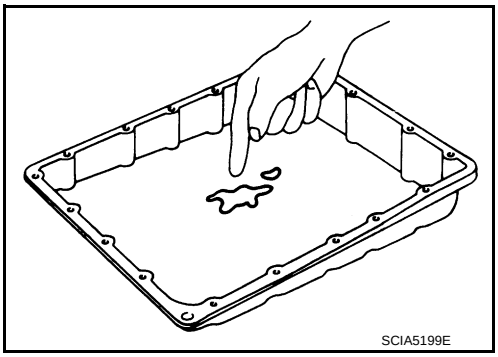
SCIA5199E

INSPECTION AFTER INSTALLATION

Check A/T fluid leakage. Refer to TM-267, "Inspection".

ADJUSTMENT AFTER INSTALLATION

Adjust A/T fluid level. Refer to TM-269, "Adjustment".

PARKING COMPONENTS

2WD

2WD : Exploded View

INFOID:0000000006412723

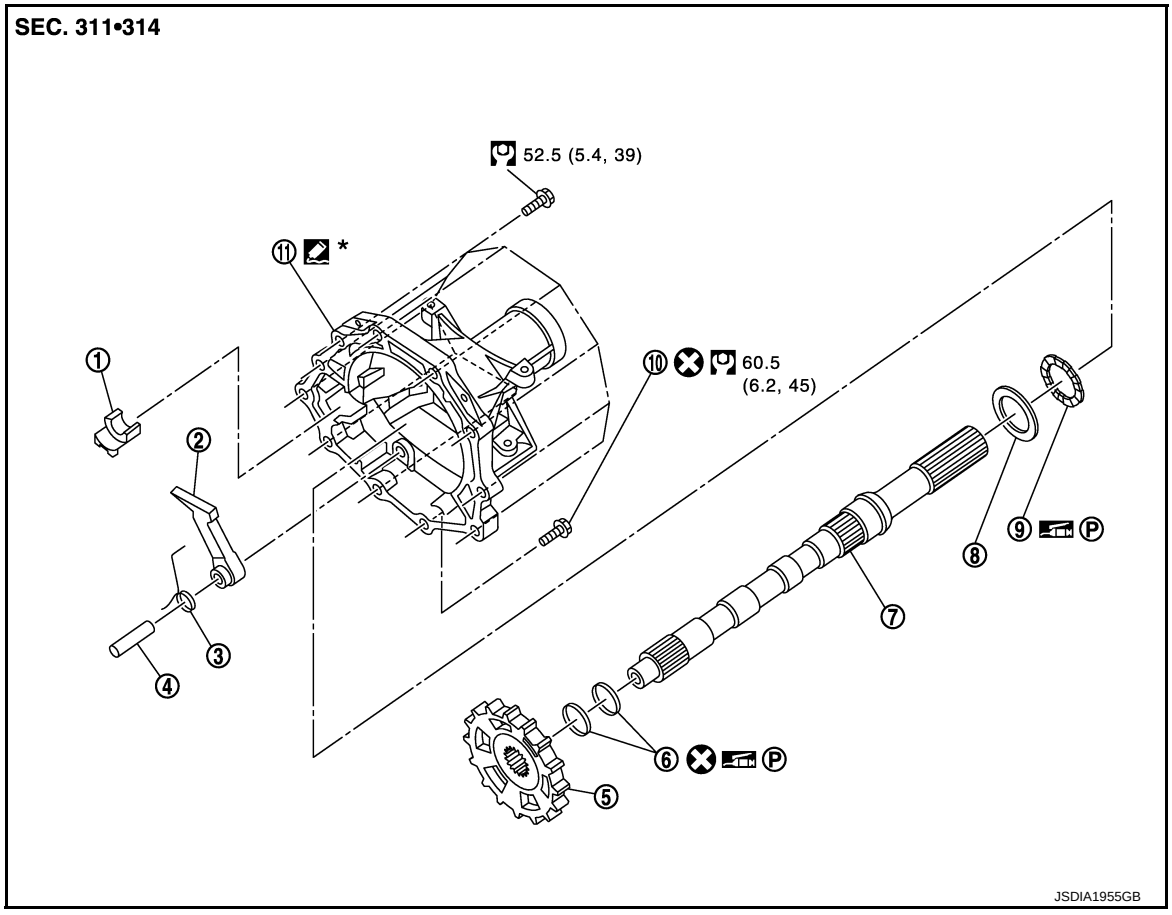

1.	Parking actuator support	2.	Parking pawl	3.	Return spring
4.	Pawl shaft	5.	Parking gear	6.	Seal ring
7.	Output shaft	8.	Bearing race	9.	Needle bearing
10.	Self-sealing bolt	11.	Rear extension		

*: Apply Genuine Anaerobic Liquid Gasket or equivalent. Refer to GI-22, "Recommended Chemical Products and Sealants".

Refer to GI-4, "Components" for symbols not described on the above.

2WD : Removal and Installation

INFOID:0000000006412724

REMOVAL

1. Drain ATF through drain plug.
2. Remove exhaust front tube and center muffler with power tool. Refer to EX-5, "Exploded View".
3. Remove propeller shaft assembly. Refer to DLN-102, "Exploded View".
4. Remove control rod. Refer to TM-276, "2WD : Exploded View".
5. Support A/T assembly with a transmission jack.
   CAUTION:
   When setting transmission jack, be careful not to allow it to collide against the drain plug.
6. Remove rear engine mounting member with power tool. Refer to EM-83, "2WD : Exploded View" (VQ25HR) or EM-224, "2WD : Exploded View" (VQ37VHR).
7. Remove engine mounting insulator (rear). Refer to EM-83, "2WD : Exploded View" (VQ25HR) or EM-224, "2WD : Exploded View" (VQ37VHR).

8. Remove tightening bolts for rear extension assembly and transmission case.

A : Bolt
B : Self-sealing bolt

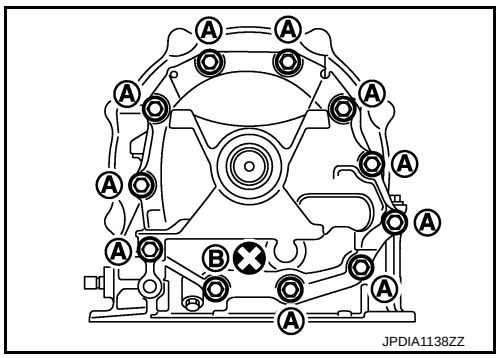

9. Tap rear extension assembly with a soft hammer (A).

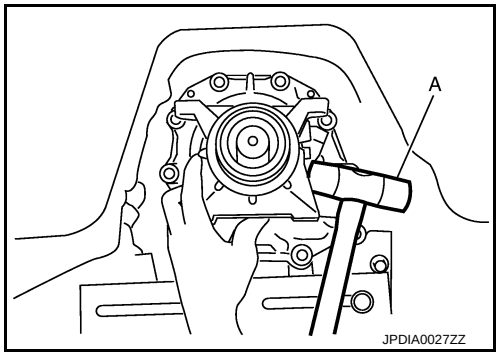

10. Remove rear extension assembly (with needle bearing) from transmission case.

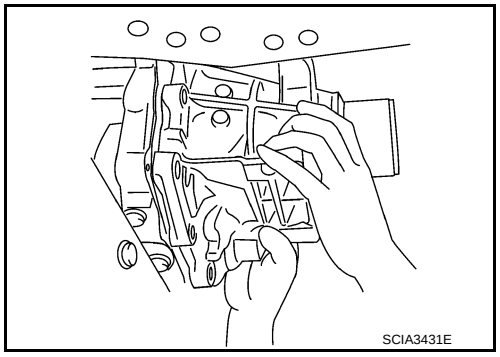

11. Remove bearing race (1) from output shaft (2).

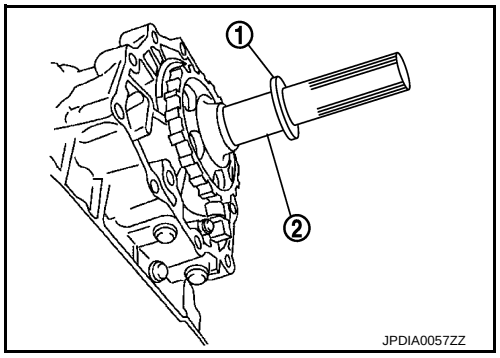

12. Remove output shaft (1) from transmission case by rotating left/right.

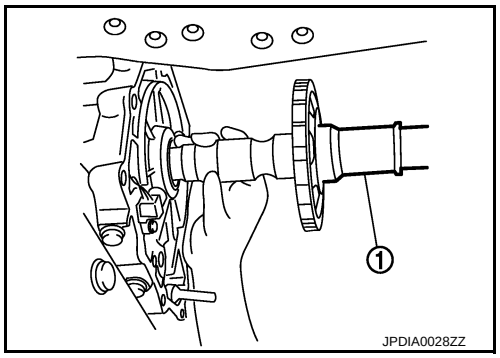

13. Remove parking gear (1) from output shaft (2).

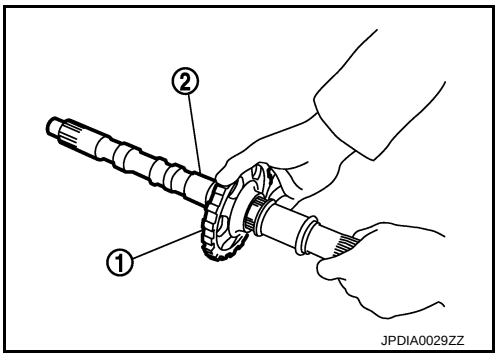

14. Remove seal rings (1) from output shaft.

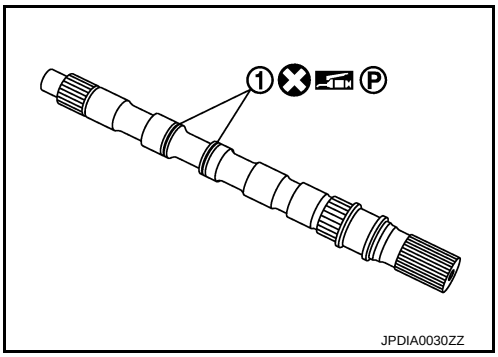

15. Remove needle bearing (1) from rear extension.

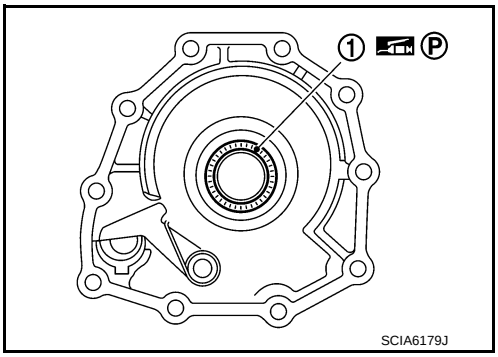

16. Remove parking actuator support (1) from rear extension.

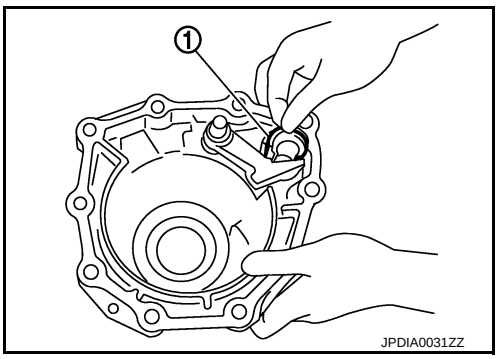

17. Remove parking pawl (with return spring) (1) and pawl shaft (2) from rear extension.

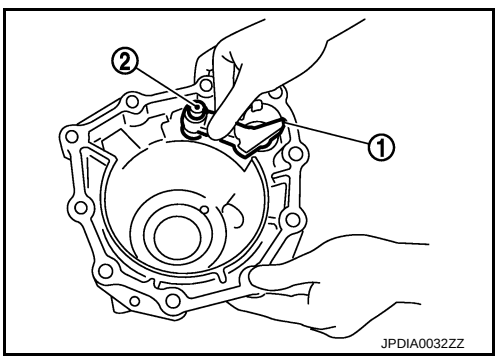

18. Remove return spring (1) from parking pawl (2).

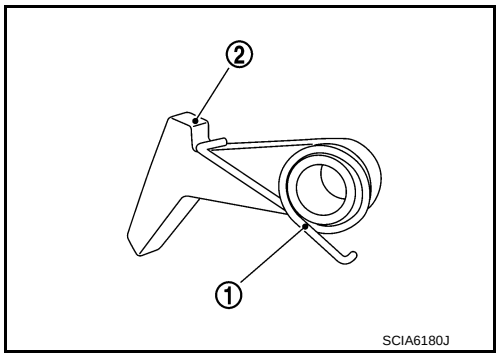

INSTALLATION

Note the following, and install in the reverse order of removal.

CAUTION:

- **Never reuse seal rings and drain plug gasket.**
- **Apply petroleum jelly to needle bearing and seal rings.**
- **Insert the tip of parking rod between the parking pawl and the parking actuator support when assembling the rear extension assembly.**
- Refer to the followings installing rear extension assembly.

- Apply recommended sealant (Genuine Anaerobic Liquid Gasket or equivalent. Refer to GI-22, "Recommended Chemical Products and Sealants".) to rear extension assembly as shown in the figure.

: Anaerobic Liquid Gasket (Loctite 518) or equivalent.

Sealant starting point and end-point (A)	**: Start and finish point shall be in the center of two bolts.**
Overlap width of sealant starting point and end-point (B)	**: 3 – 5 mm (0.12 – 0.20 in)**
Sealant width (C)	**: 1.0 – 2.0 mm (0.04 – 0.08 in)**
Sealant height (C)	**: 0.4 – 1.0 mm (0.016 – 0.04 in)**

CAUTION:

Completely remove all moisture, oil and old sealant, etc. from transmission case and rear extension assembly mounting surfaces.

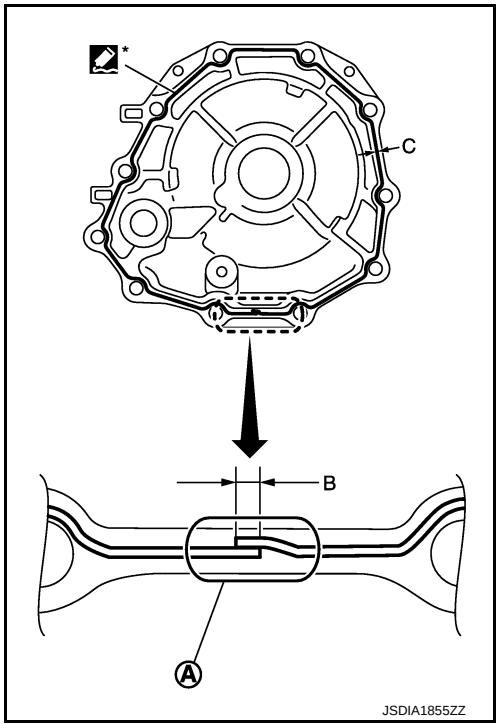

- Tighten rear extension assembly bolts to the specified torque.

A : Bolt
B : Self-sealing bolt

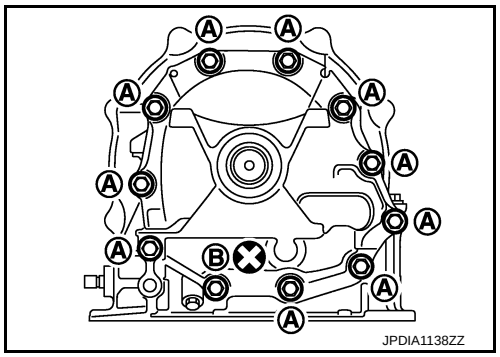

2WD : Inspection

INFOID:0000000006412725

INSPECTION AFTER REMOVAL

If the contact surface on parking actuator support (1), parking pawl (2) and etc. has excessive wear, abrasion, bend, or any other damage, replace the components.

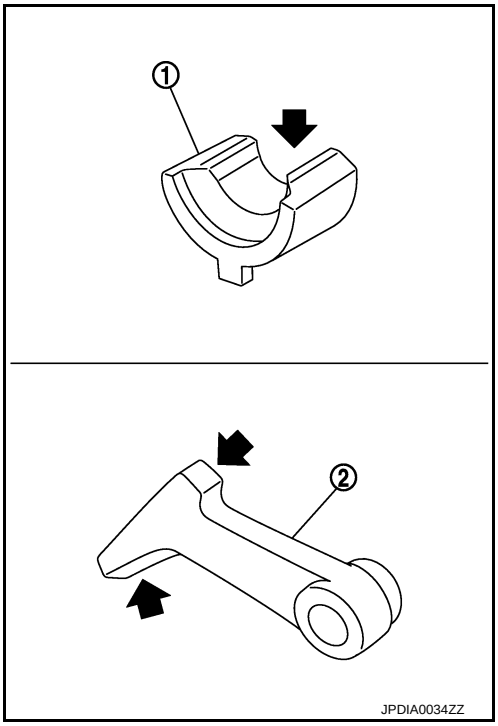

INSPECTION AFTER INSTALLATION

- Check A/T fluid leakage. Refer to TM-267, "Inspection".
- Check A/T positions after adjusting A/T positions. Refer to TM-274, "Inspection and Adjustment".

ADJUSTMENT AFTER INSTALLATION

Adjust A/T positions. Refer to TM-274, "Inspection and Adjustment".

REAR OIL SEAL

2WD

2WD : Exploded View

INFOID:0000000006412717

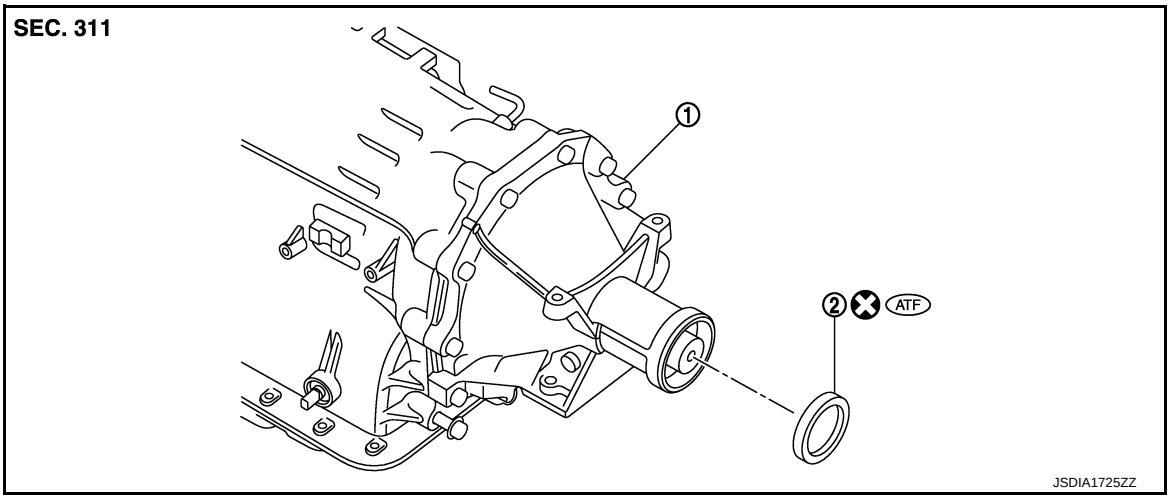

1. A/T
2. Rear oil seal

Refer to GI-4, "Components" for symbols in the figure.

2WD : Removal and Installation

INFOID:0000000006412718

REMOVAL

1. Separate propeller shaft assembly. Refer to DLN-102, "Exploded View".
2. Remove rear oil seal (1) using a flat-bladed screwdriver (A).
   CAUTION:
   Be careful not to scratch rear extension assembly.

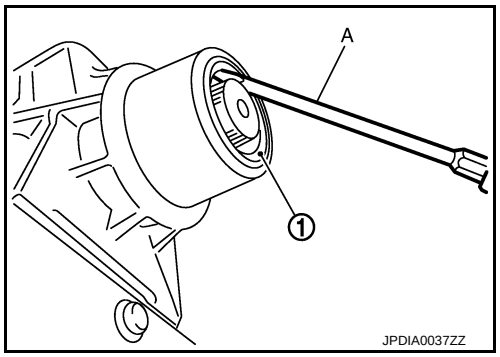

INSTALLATION

Note the following, and install in the reverse order of removal.

- As shown in the figure, use the drift [SST: ST33400001 (J-26082)] (A) to drive rear oil seal into rear extension assembly until it is flush.
  CAUTION:
  - **Never reuse rear oil seal.**
  - **Apply ATF to rear oil seal.**

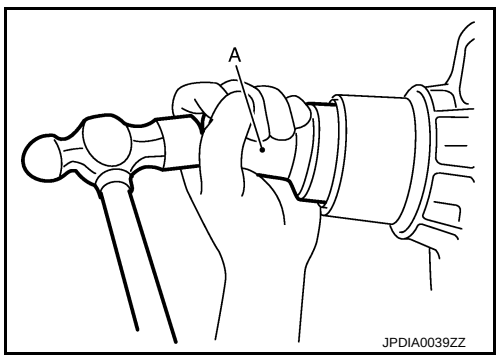

2WD : Inspection

INFOID:0000000006412719

INSPECTION AFTER INSTALLATION

Check A/T fluid leakage. Refer to TM-267, "Inspection".

ADJUSTMENT AFTER INSTALLATION

Adjust A/T fluid level. Refer to TM-269, "Adjustment".

AWD

AWD : Exploded View

INFOID:0000000006412720

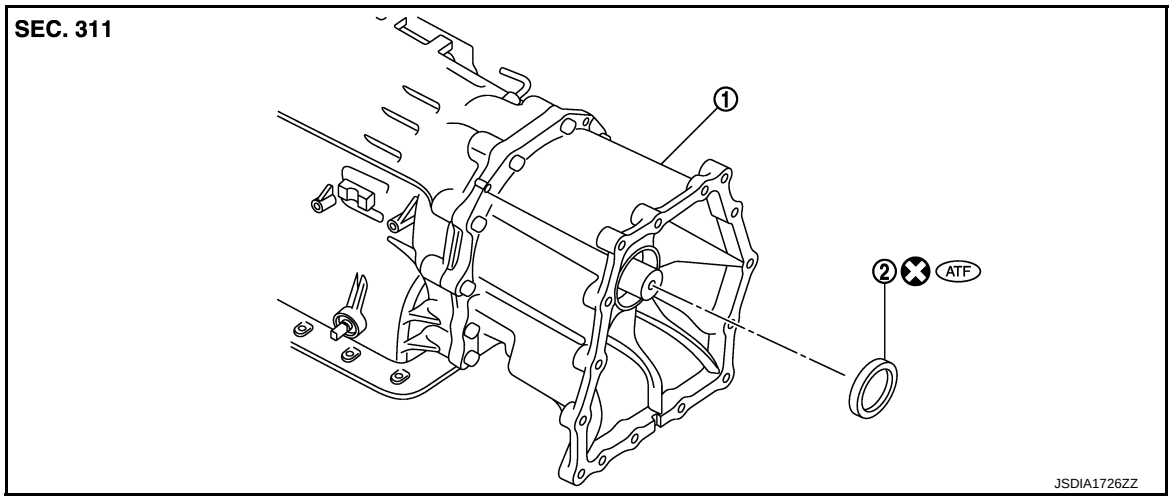

1. A/T
2. Rear oil seal

Refer to GI-4, "Components" for symbols in the figure.

AWD : Removal and Installation

INFOID:0000000006412721

REMOVAL

1. Remove transfer assembly from A/T assembly. Refer to DLN-62, "Exploded View".
2. Remove rear oil seal (1) using a flat-bladed screwdriver (A).
   CAUTION:
   Be careful not to scratch adapter case assembly.

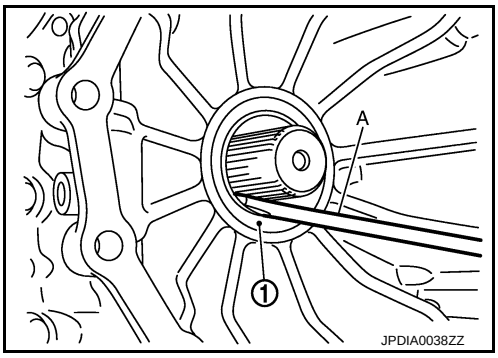

INSTALLATION

Note the following, and install in the reverse order of removal.

- As shown in the figure, use the drift [64 mm (2.52 in) dia. commercial service tool] (A) to drive rear oil seal into adapter case assembly until it is flush.

CAUTION:

- **Never reuse rear oil seal.**
- **Apply ATF to rear oil seal.**

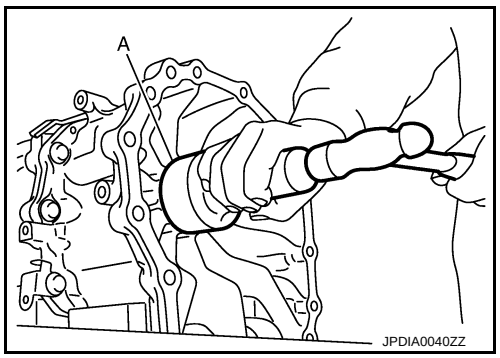

AWD : Inspection

INFOID:0000000006412722

INSPECTION AFTER INSTALLATION

Check A/T fluid leakage. Refer to TM-267, "Inspection".

ADJUSTMENT AFTER INSTALLATION

Adjust A/T fluid level. Refer to TM-269, "Adjustment".

OUTPUT SPEED SENSOR

2WD

2WD : Exploded View

INFOID:0000000006412711

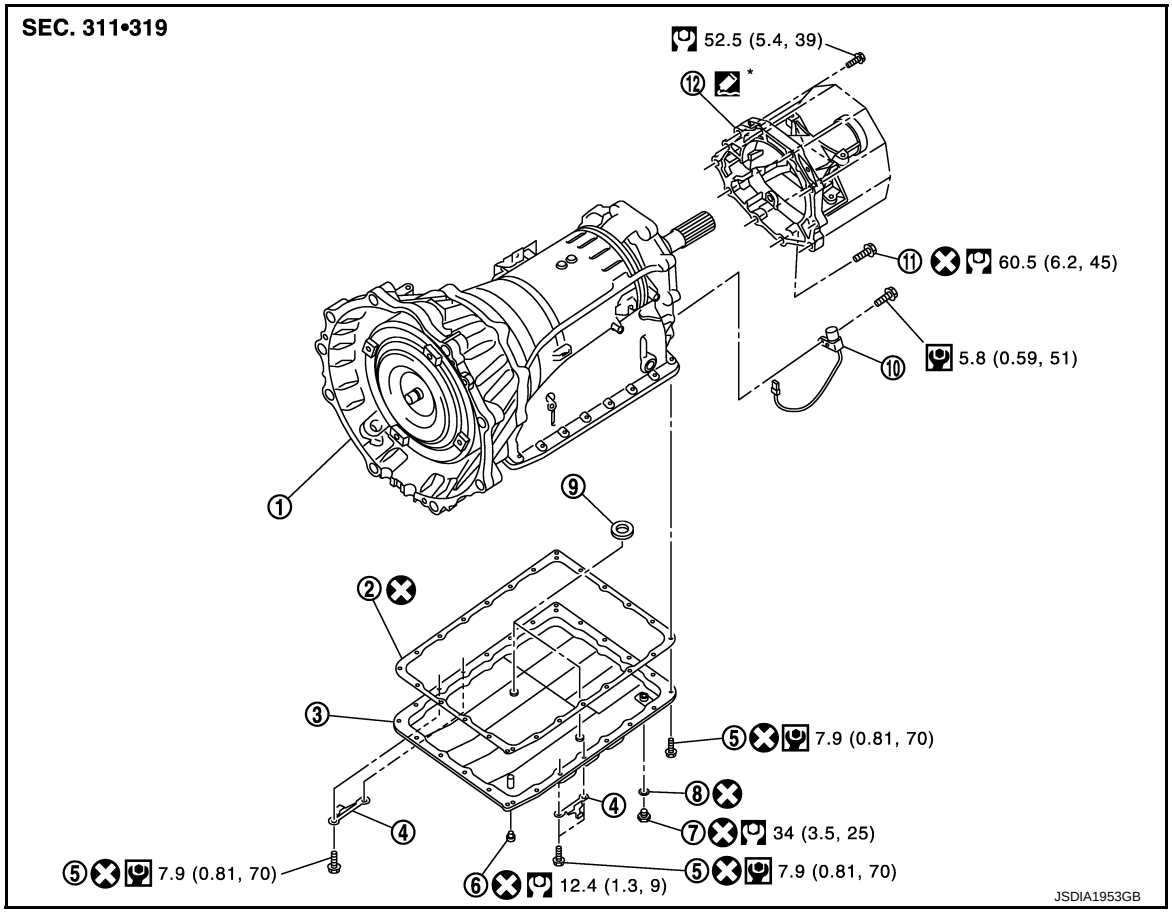

1.	A/T	2.	Oil pan gasket	3.	Oil pan
4.	Overflow plug	5.	Drain plug	6.	Drain plug gasket
7.	Oil pan mounting bolt	8.	Magnet	9.	Output speed sensor
10.	Rear extension	11.	Self-sealing bolt		

*: Apply Genuine Anaerobic Liquid Gasket or equivalent. Refer to GI-22, "Recommended Chemical Products and Sealants".

Refer to GI-4, "Components" for symbols not described on the above.

2WD : Removal and Installation

INFOID:0000000006412712

REMOVAL

1. Disconnect the battery cable from the negative terminal.
2. Drain ATF through drain plug.
3. Remove exhaust front tube and center muffler with power tool. Refer to EX-5, "Exploded View".
4. Remove propeller shaft assembly. Refer to DLN-102, "Exploded View".
5. Remove control rod. Refer to TM-276, "2WD : Exploded View".
6. Remove exhaust mounting bracket. Refer to EX-5, "Exploded View".

7. Disconnect heated oxygen sensor 2 harness connectors (A).

⇦ : Vehicle front

⬅ : Bolt

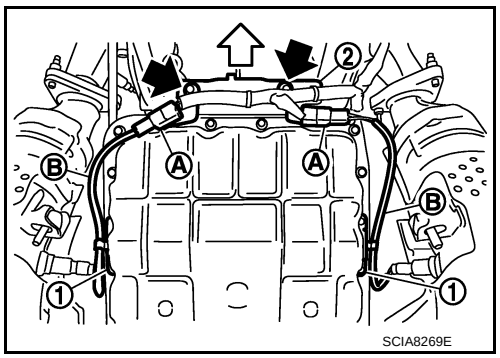

8. Remove heated oxygen sensor 2 harness (B) from clips (1).
9. Remove bracket (2) from transmission assembly.
10. Remove clips (1).

⇦ : Vehicle front

⬅ : Oil pan mounting bolt

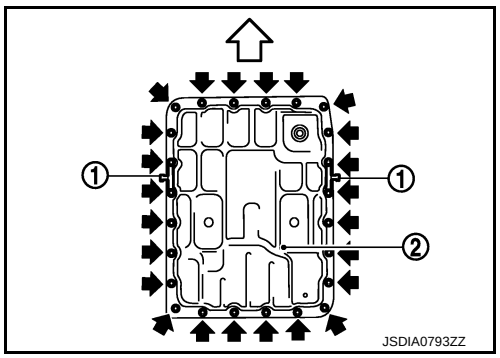

11. Remove oil pan (2) and oil pan gasket.
12. Support A/T assembly with a transmission jack.
CAUTION:
When setting transmission jack, place wooden blocks to prevent from damaging control valve & TCM and transmission case.
13. Remove rear engine mounting member with power tool. Refer to EM-83, "2WD : Exploded View" (VQ25HR), EM-224, "2WD : Exploded View" (VQ37VHR).
14. Remove engine mounting insulator (rear). Refer to EM-83, "2WD : Exploded View" (VQ25HR), EM-224, "2WD : Exploded View" (VQ37VHR).
15. Remove tightening bolts for rear extension assembly and transmission case.

A : Bolt

B : Self-sealing bolt

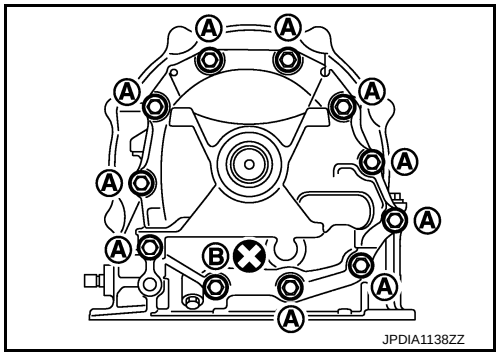

16. Tap rear extension assembly with a soft hammer (A).

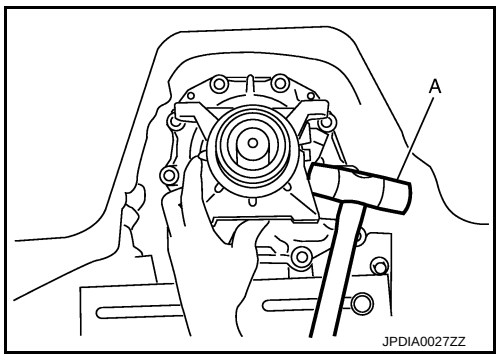

17. Remove rear extension assembly (with needle bearing) from transmission case.

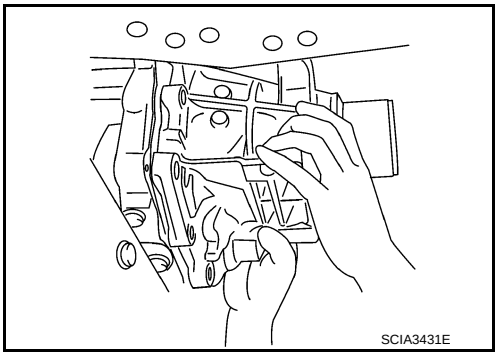

18. Disconnect output speed sensor connector (A).
CAUTION:
Be careful not to damage connector
19. Disengage terminal clips (⬅).

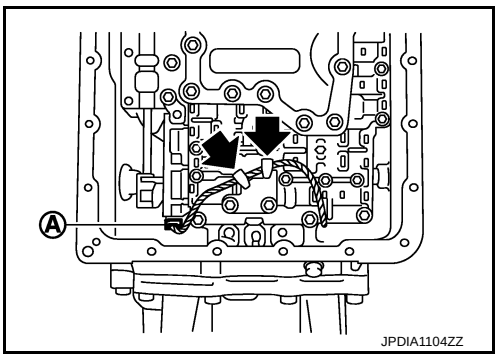

20. Remove output speed sensor (1) from transmission case.

⬅ : Bolt

CAUTION:
- **Never subject it to impact by dropping or hitting it.**
- **Never disassemble.**
- **Never allow metal filings, etc. to get on the sensor's front edge magnetic area.**
- **Never place in an area affected by magnetism.**

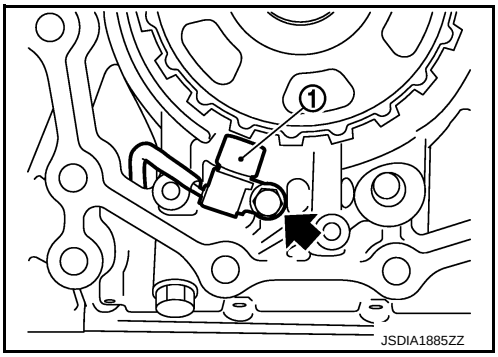

INSTALLATION

Note the following, and install in the reverse order removal.

CAUTION:
- **Insert the tip of parking rod between the parking pole and the parking actuator support when assembling the rear extension assembly.**
- **Never reuse drain plug gasket.**
- Refer to the followings when installing output speed sensor.
  CAUTION:
  - **Never subject it to impact by dropping or hitting it.**
  - **Never disassemble.**
  - **Never allow metal filings, etc. to get on the sensor's front edge magnetic area.**
  - **Never place in an area affected by magnetism.**
- Refer to the followings when installing rear extension assembly.

- Apply recommended sealant (Genuine Anaerobic Liquid Gasket or equivalent. Refer to GI-22, "Recommended Chemical Products and Sealants".) to rear extension assembly as shown in the figure.

Sealant starting point and end-point (A)	**: Start and finish point shall be in the center of two bolts.**
Overlap width of sealant starting point and end-point (B)	**: 3 – 5 mm (0.12 – 0.20 in)**
Sealant width (C)	**: 1.0 – 2.0 mm (0.04 – 0.08 in)**
Sealant height (C)	**: 0.4 – 1.0 mm (0.016 – 0.04 in)**

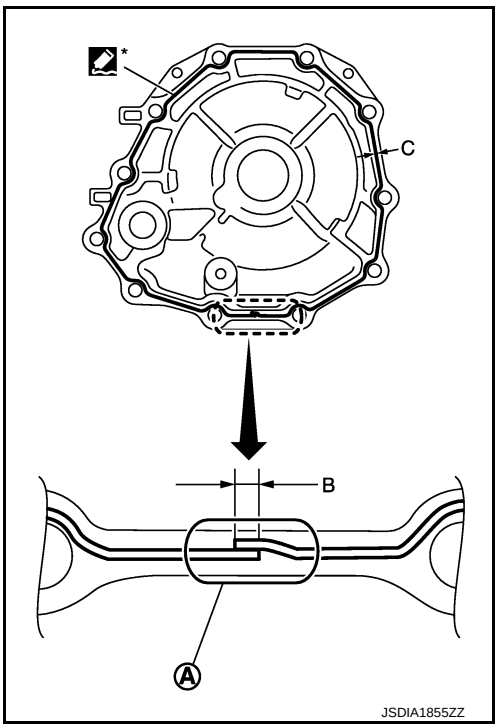

CAUTION:
Completely remove all moisture, oil and old sealant, etc. from transmission case and rear extension assembly mounting surfaces.

- Tighten rear extension assembly bolts to the specified torque.

A : Bolt
B : Self-sealing bolt

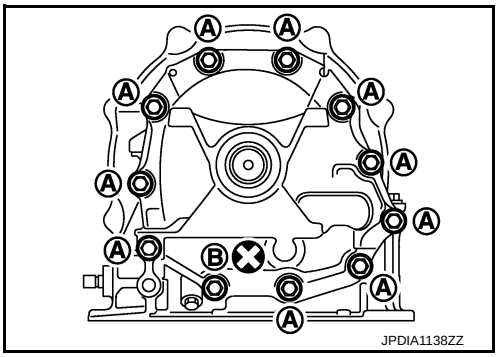

- Refer to the followings when installing oil pan (2) (with oil pan gasket) and clips (1) to transmission case.

⇦ : Vehicle front
⬅ : Oil pan mounting bolt

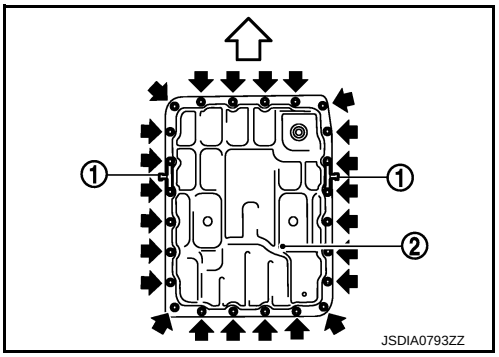

CAUTION:
- **Never reuse oil pan gasket and oil pan mounting bolts.**
- **Install oil pan gasket in the direction to align hole position.**
- **Install it so that drain plug comes to the position as shown in the figure.**
- **Be careful not to pinch harnesses.**
- **Completely remove all moisture, oil and old gasket, etc. from oil pan mounting surface.**

- Tighten oil pan mounting bolts to the specified torque in numerical order shown in the figure after temporarily tightening them. Tighten necessary oil pan mounting bolts with specified torque.

⇦ : Vehicle front

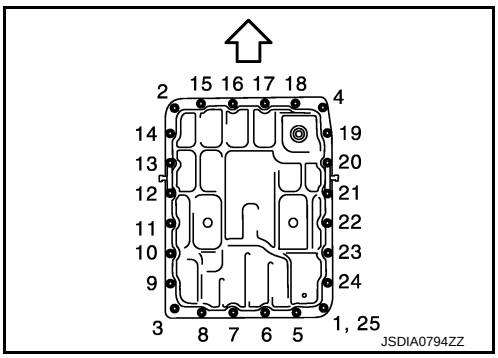

2WD : Inspection

INFOID:0000000006412713

INSPECTION AFTER REMOVAL

Check foreign materials in oil pan to help determine causes of malfunction. If the ATF is very dark, smells burned, or contains foreign particles, the frictional material (clutches, band) may need replacement. A tacky film that will not wipe clean indicates varnish build up. Varnish can cause valves, servo, and clutches to stick and can inhibit pump pressure.

- **If frictional material is detected, perform A/T fluid cooler cleaning. Refer to TM-270, "Cleaning".**

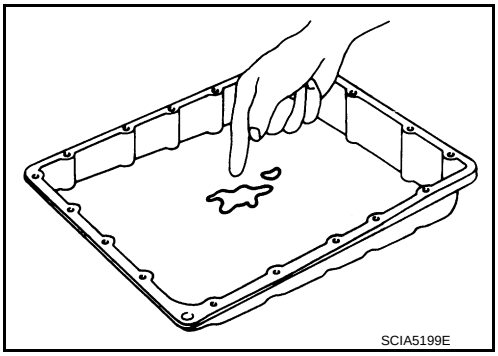

INSPECTION AFTER INSTALLATION

- Check A/T fluid leakage. Refer to TM-267, "Inspection".
- Check A/T positions after adjusting A/T positions. Refer to TM-274, "Inspection and Adjustment".

ADJUSTMENT AFTER INSTALLATION

Adjust A/T positions. Refer to TM-269, "Adjustment".

AIR BREATHER HOSE

VQ25HR, VQ37VHR (2WD)

VQ25HR, VQ37VHR (2WD) : Exploded View

INFOID:0000000006207817

VQ25HR Model

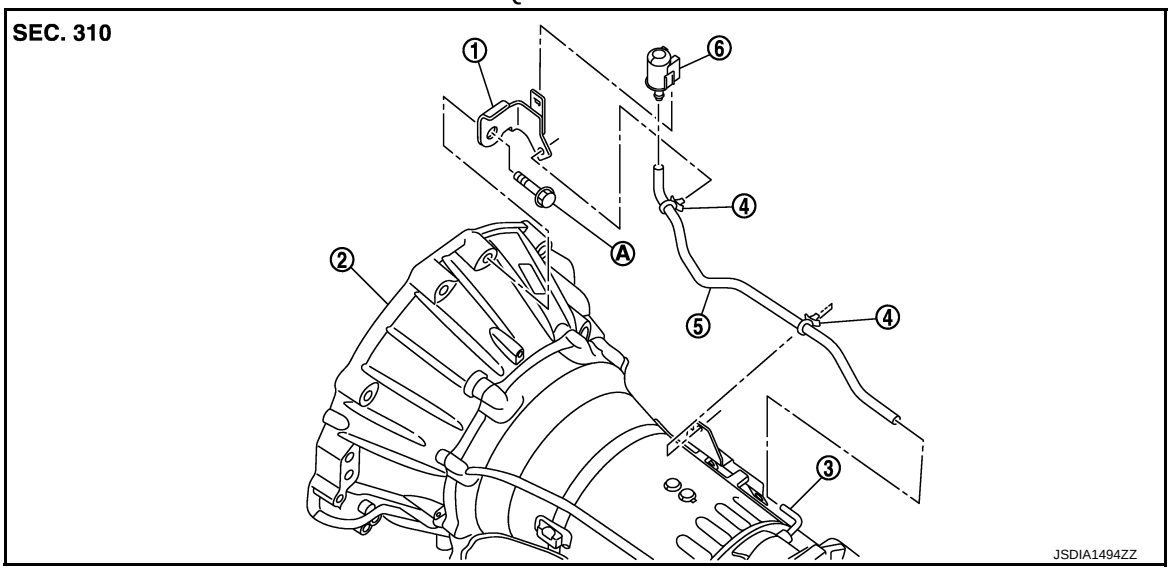

1. Bracket
2. A/T assembly
3. A/T air breather tube
4. Clip
5. A/T air breather hose
6. Air breather box

A. Tightening must be done following the installation procedure. Refer to TM-310, "2WD : Removal and Installation".

VQ37VHR Model

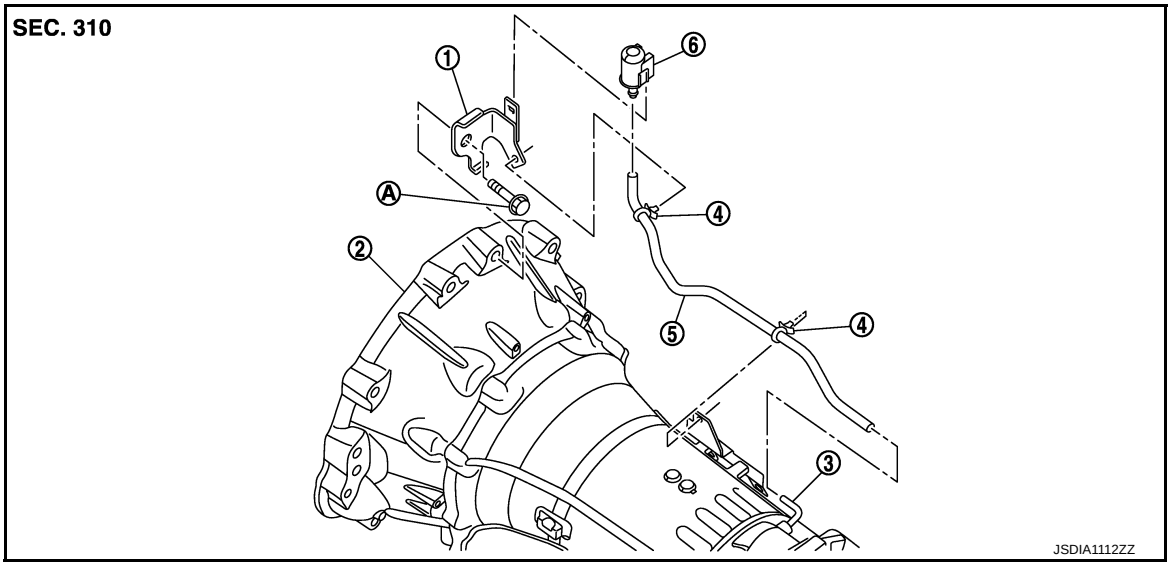

1. Bracket
2. A/T assembly
3. A/T air breather tube
4. Clip
5. A/T air breather hose
6. Air breather box

A. Tightening must be done following the installation procedure. Refer to TM-310, "2WD : Removal and Installation".

VQ25HR, VQ37VHR (2WD) : Removal and Installation

INFOID:0000000006207818

REMOVAL

1. Remove clips from brackets.
2. Remove air breather box from bracket.

3. Remove air breather box from A/T air breather hose.
4. Remove A/T air breather hose from A/T assembly.
5. Remove bolt fixing A/T assembly to engine assembly with a power tool.
6. Remove bracket.

INSTALLATION

Note the following, and install in the reverse order of removal.

CAUTION:

- **Never bend the A/T air breather hose to prevent damage to the hose.**
- **Insert A/T air breather hose to A/T air breather tube all the way to the curve of the tube.**
- **Be sure to insert it fully until its end reaches the stop when inserting A/T air breather hose to air breather box.**
- **Install A/T air breather hose to air breather box so that the paint mark is facing backward.**
- **Securely install the clips to the brackets when installing A/T air breather hose to the brackets.**

VQ25HR (AWD)

VQ25HR (AWD) : Exploded View

INFOID:0000000006474180

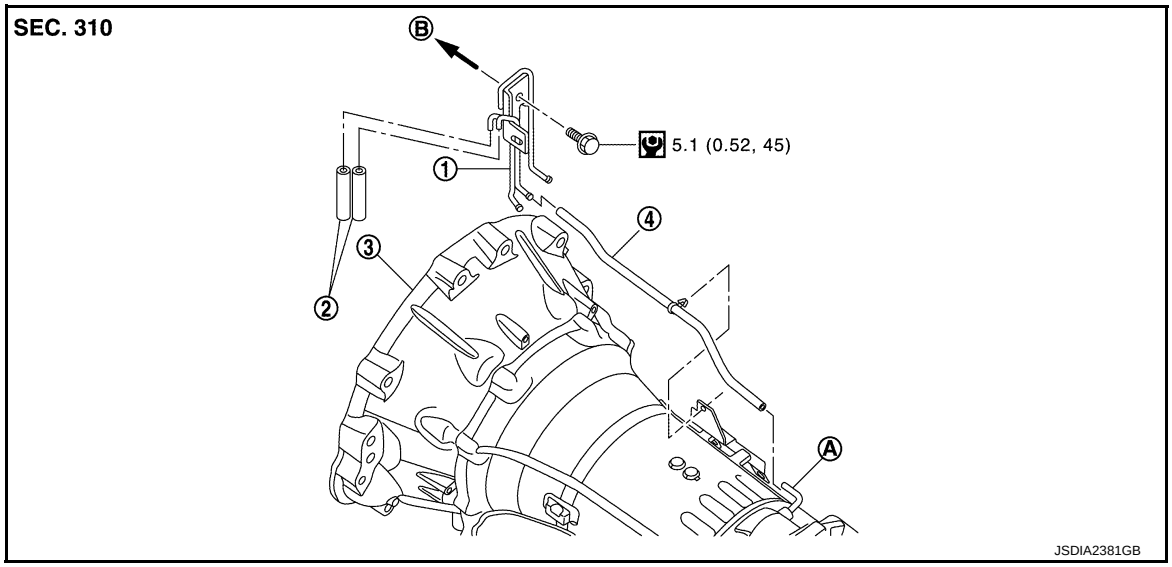

1. Air breather tube
2. Air breather hose
3. A/T assembly

A. A/T air breather tube

B. To water outlet (rear)

Refer to GI-4, "Components" for symbols in the figure.

VQ25HR (AWD) : Removal and Installation

INFOID:0000000006474181

REMOVAL

1. Separate propeller shaft assembly (front). Refer to DLN-87, "Exploded View".
2. Remove air breather tube from water outlet (rear).
3. Remove air breather hoses from air breather tube.
4. Remove A/T air breather hose from A/T assembly..

INSTALLATION

Note the following and install in the reverse order of removal.

CAUTION:

- **Never bend the A/T air breather hose to prevent damage to the hose.**
- **Insert A/T air breather hose to A/T air breather tube all the way to the curve of the tube.**
- **Insert air breather hoses to air breather tube all the way to the curve of the tube.**

- **Be sure to insert it fully until its end reaches the radius curve end when inserting A/T air breather hose (1) to air breather tube.**

2 : Transfer air breather hose
3 : Front final drive air breather hose

- **Install A/T air breather hose to air breather tube so that the paint mark (A) is facing upward.**
- **Securely install the clip to the brackets when installing A/T air breather hose to the bracket.**

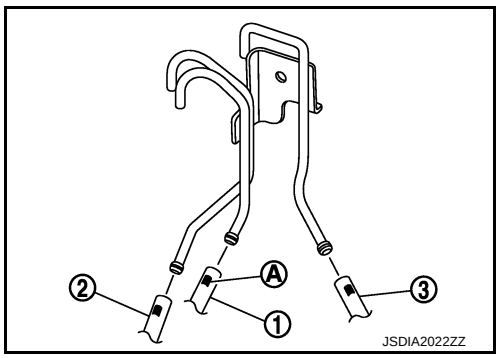

VQ37VHR (AWD)

VQ37VHR (AWD) : Exploded View

INFOID:0000000006207819

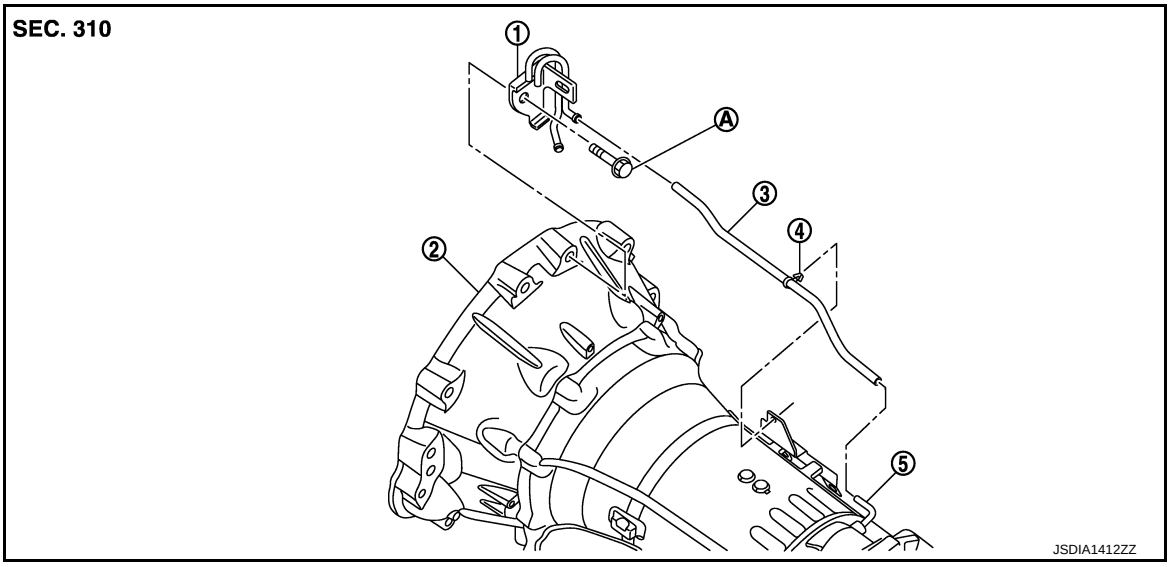

1. Air breather vent
2. A/T assembly
3. Air breather hose
4. Clip
5. Air breather tube

A. Tightening must be done following the installation procedure. Refer to TM-313, "AWD : Removal and Installation".

VQ37VHR (AWD) : Removal and Installation

INFOID:0000000006207820

REMOVAL

1. Separate propeller shaft assembly (front). Refer to DLN-87, "Exploded View".
2. Remove air breather hose.
3. Separate propeller shaft assembly (rear). Refer to DLN-110, "Exploded View".
4. Remove control rod from A/T shift selector assembly. Refer to TM-278, "AWD : Exploded View".
5. Support A/T assembly with a transmission jack.
   CAUTION:
   When setting the transmission jack, be careful not to allow it to collide against the drain plug and overflow plug.
6. Remove rear engine mounting member with a power tool. Refer to EM-228, "AWD : Exploded View".
7. Remove bolt fixing A/T assembly to engine assembly with a power tool.
8. Remove air breather vent.

INSTALLATION

Note the following, and install in the reverse order of removal.
CAUTION:

- **When installing air breather hose, be careful not to be crushed or blocked by folding or bending the hose.**
- **When inserting air breather hose to air breather tube, be sure to insert it fully until its end reaches the radius curve end.**
- **When inserting air breather hose to air breather vent (for A/T) (1), be sure to insert it fully until its end reaches the radius curve end.**

2 : Air breather vent (for transfer)

- **Install air breather hose to air breather vent (for A/T) so that the paint mark is facing upward.**
- **Ensure clips are securely installed to brackets when installing air breather hose to brackets.**

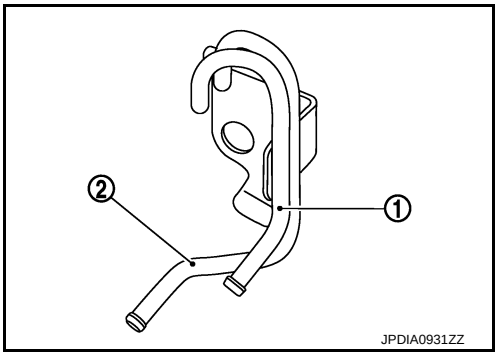

FLUID COOLER SYSTEM

2WD

2WD : Exploded View

INFOID:0000000006207821

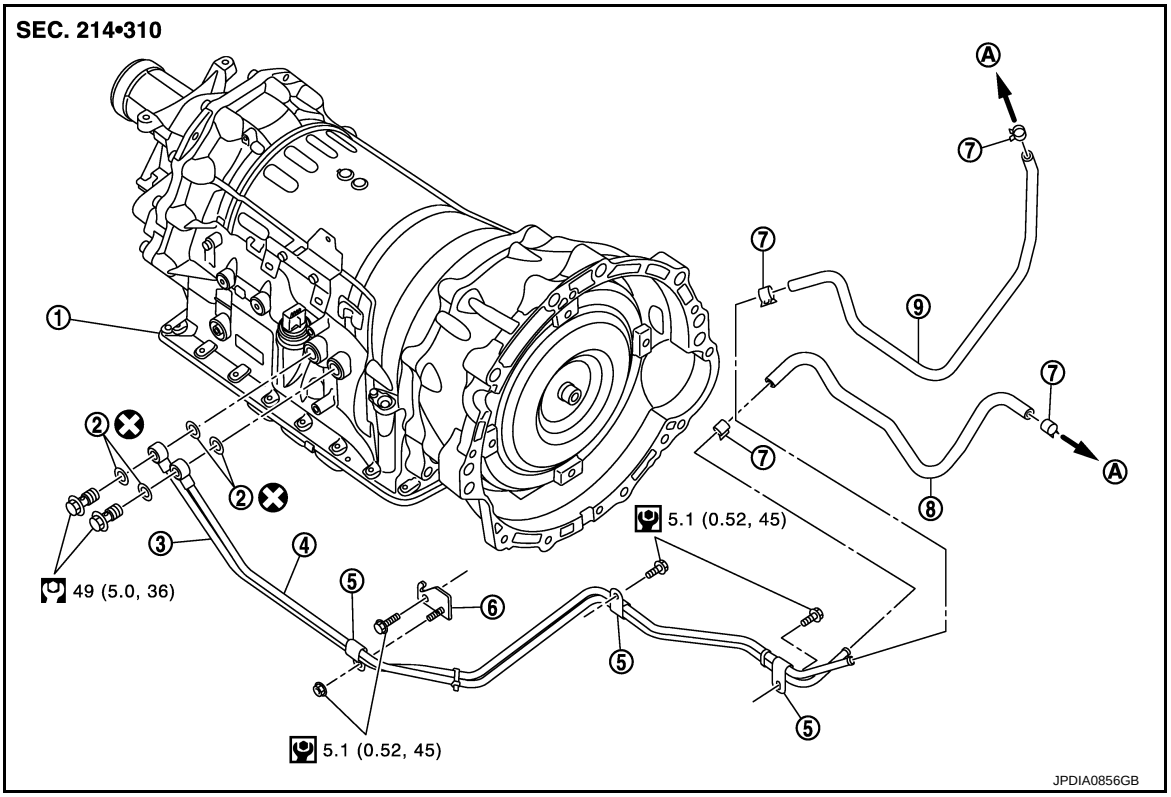

1. A/T assembly
2. Copper washer
3. A/T fluid cooler tube
4. A/T fluid cooler tube
5. Clip
6. Bracket
7. Hose clamp
8. A/T fluid cooler hose B
9. A/T fluid cooler hose A

A. To radiator

Refer to GI-4, "Components" for symbols in the figure.

2WD : Removal and Installation

INFOID:0000000006207822

REMOVAL

1. Remove air cleaner case (LH). Refer to EM-182, "Exploded View".
2. Remove engine lower cover with a power tool. Refer to EXT-32, "Exploded View".
3. Remove A/T fluid cooler hose A and A/T fluid cooler hose B.
4. Remove the exhaust mounting bracket with power tool. Refer to EX-5, "Exploded View".
5. Remove the A/T fluid cooler tube mounting bolts and bracket.
6. Remove the band fixing two A/T fluid cooler tubes.
7. Remove the stabilizer clamp from the front suspension member. Refer to FSU-19, "Exploded View".
8. Remove the lower mounting nuts for the engine mounting insulators (RH and LH). Refer to EM-224, "2WD : Exploded View".
9. Set a jack under the engine to lift it to the position where the A/T fluid cooler tube can be removed.
   CAUTION:
   - **Never set a jack on the engine oil pan.**
   - **Never pull the harnesses, hoses, etc. excessively.**
10. Remove the A/T fluid cooler tubes one at a time from the vehicle.
    CAUTION:

Be careful not to bend A/T fluid cooler tubes.

11. Plug up opening such as the A/T fluid cooler tube holes.

INSTALLATION

Note the following, and install in the reverse order of removal.

CAUTION:

Never reuse copper washers.

- Refer to the following when installing A/T fluid cooler hoses.

Hose name	Hose end	Paint mark	Position of hose clamp*
A/T fluid cooler hose A	Radiator assembly side	Facing backward	A
	A/T fluid cooler tube side	Facing downward	B
A/T fluid cooler hose B	Radiator assembly side	Facing downward	C
	A/T fluid cooler tube side	Facing downward	B

*: Refer to the illustrations for the specific position each hose clamp tab.

- The illustrations indicate the view from the hose ends.

⇦D : Vehicle front

⇦E : Vehicle upper

- When installing hose clamps center line of each hose clamp tab should be positioned as shown in the figure.

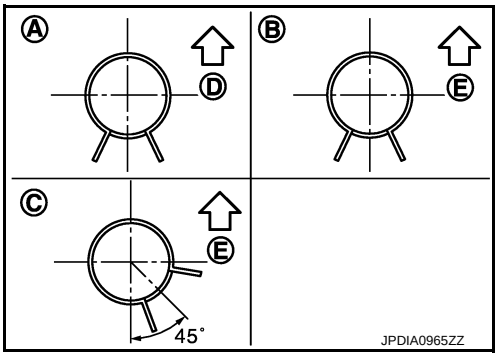

- Insert A/T fluid cooler hoses according to dimension “L” described below.

(1)	(2)	Tube type	Dimension “L”
A/T fluid cooler hose A	Radiator assembly side	A	End reaches the radius curve end.
	A/T fluid cooler tube side	B	30 mm (1.18 in) [End reaches the 2-stage bulge (D).]
A/T fluid cooler hose B	Radiator assembly side	C	Insert the hose until the hose touches the radiator.
	A/T fluid cooler tube side	B	30 mm (1.18 in) [End reaches the 2-stage bulge (D).]

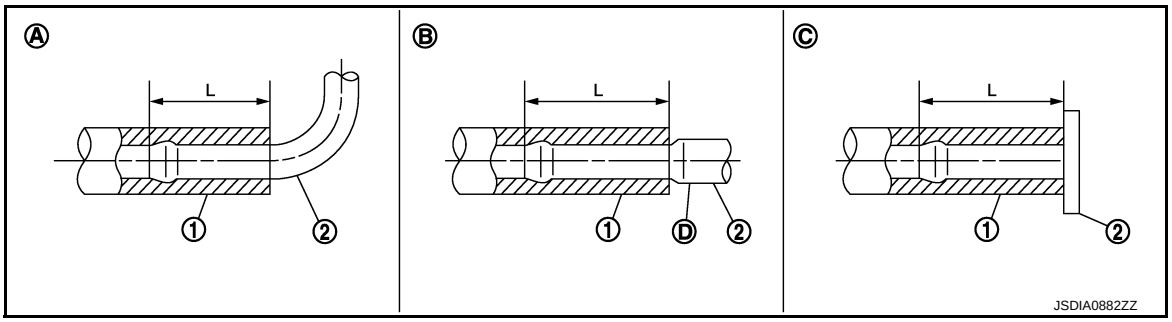

- Set hose clamps (1) at the both ends of A/T fluid cooler hoses (2) with dimension “A” from the hose edge.

Dimension “A” : 5 – 9 mm (0.20 – 0.35 in)

- Hose clamp should not interfere with the bulge of fluid cooler tube.

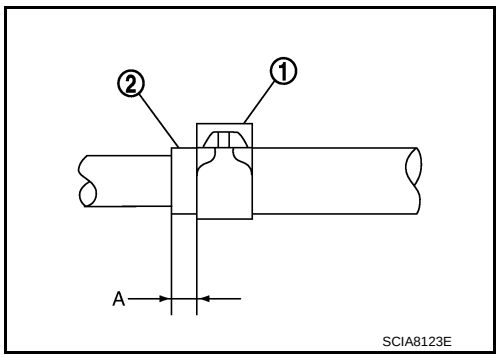

2WD : Inspection and Adjustment

INFOID:0000000006207823

ADJUSTMENT AFTER INSTALLATION

Adjust A/T fluid level. Refer to TM-269, "Adjustment".

INSPECTION AFTER INSTALLATION

Check A/T fluid leakage.

AWD

AWD : Exploded View

INFOID:0000000006207824

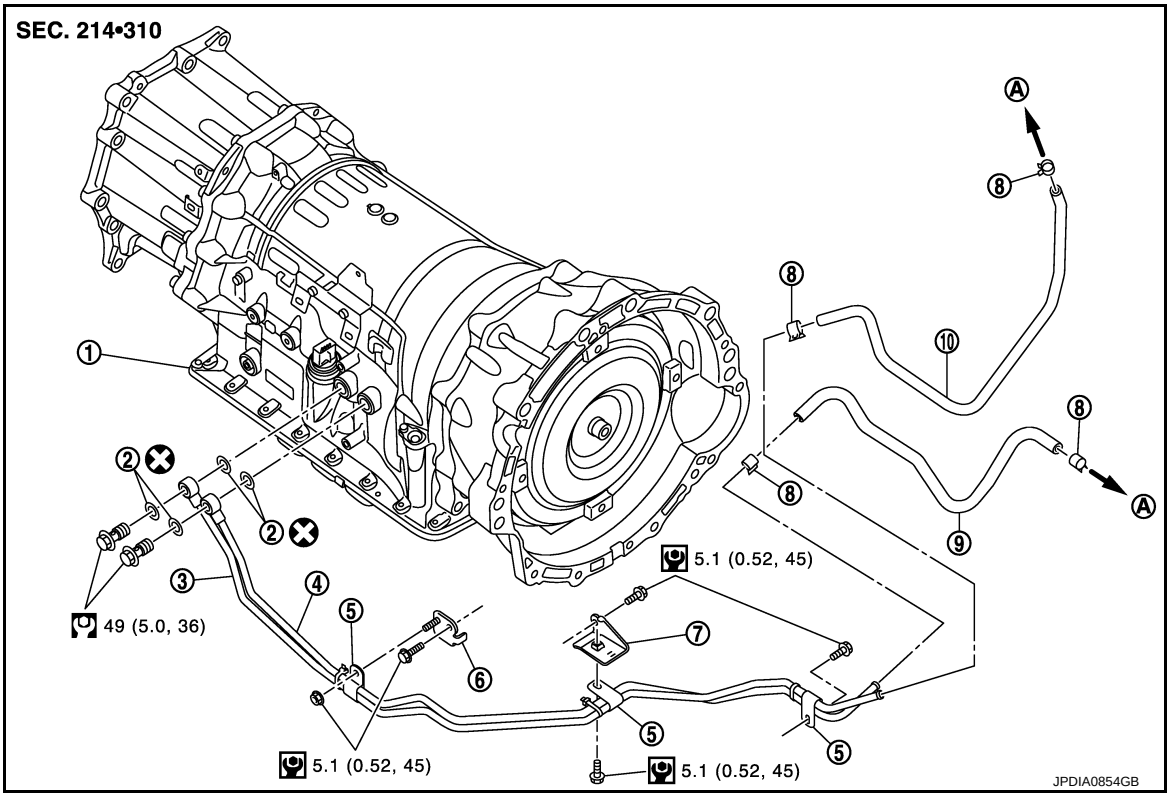

1. A/T assembly
2. Copper washer
3. A/T fluid cooler tube
4. A/T fluid cooler tube
5. Clip
6. Bracket
7. Bracket
8. Hose clamp
9. A/T fluid cooler hose B
10. A/T fluid cooler hose A

A. To radiator

Refer to GI-4, "Components" for symbols in the figure.

AWD : Removal and Installation

INFOID:0000000006207825

REMOVAL

1. Remove air cleaner case (LH). Refer to EM-182, "Exploded View".
2. Remove engine lower cover with a power tool. Refer to EXT-32, "Exploded View".
3. Remove A/T fluid cooler hose A and A/T fluid cooler hose B.
4. Remove front propeller shaft. Refer to DLN-87, "Exploded View".
5. Disconnect heated oxygen sensor 2 connectors (A).

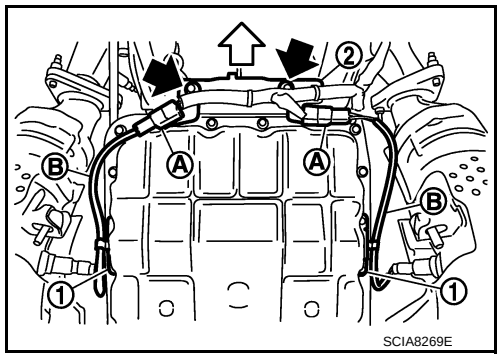

⇦ : Vehicle front

⬅ : Bolt

6. Remove heated oxygen sensor 2 harness (B) from clips (1).
7. Remove bracket (2) from A/T assembly. Refer to TM-313, "AWD : Exploded View".
8. Remove front suspension member. Refer to FSU-43, "Exploded View".
9. Remove A/T fluid cooler tubes from A/T assembly and engine assembly.
   CAUTION:
   Be careful not to bend A/T fluid cooler tubes.
10. Plug up opening such as the A/T fluid cooler tube holes.
11. Remove clips and brackets.

INSTALLATION

Note the following, and install in the reverse order of removal.

CAUTION:

Never reuse copper washers.

- Refer to the following when installing A/T fluid cooler hoses.

Hose name	Hose end	Paint mark	Position of hose clamp*
A/T fluid cooler hose A	Radiator assembly side	Facing backward	A
	A/T fluid cooler tube side	Facing downward	B
A/T fluid cooler hose B	Radiator assembly side	Facing downward	C
	A/T fluid cooler tube side	Facing downward	B

*: Refer to the illustrations for the specific position each hose clamp tab.

- The illustrations indicate the view from the hose ends.

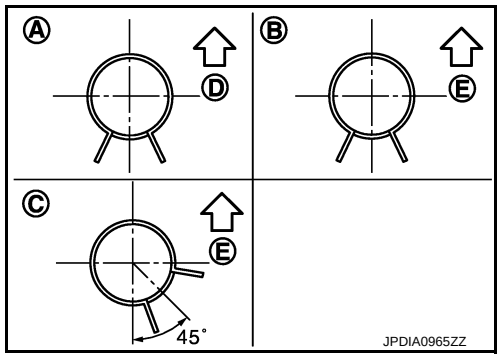

⇦D : Vehicle front

⇦E : Vehicle upper

- When installing hose clamps center line of each hose clamp tab should be positioned as shown in the figure.

- Insert A/T fluid cooler hose according to dimension “L” described below.

(1)	(2)	Tube type	Dimension “L”
A/T fluid cooler hose A	Radiator assembly side	A	End reaches the radius curve end.
	A/T fluid cooler tube side	B	30 mm (1.18 in) [End reaches the 2-stage bulge (D).]

(1)	(2)	Tube type	Dimension “L”
A/T fluid cooler hose B	Radiator assembly side	C	Insert the hose until the hose touches the radiator.
	A/T fluid cooler tube side	B	30 mm (1.18 in) [End reaches the 2-stage bulge (D).]

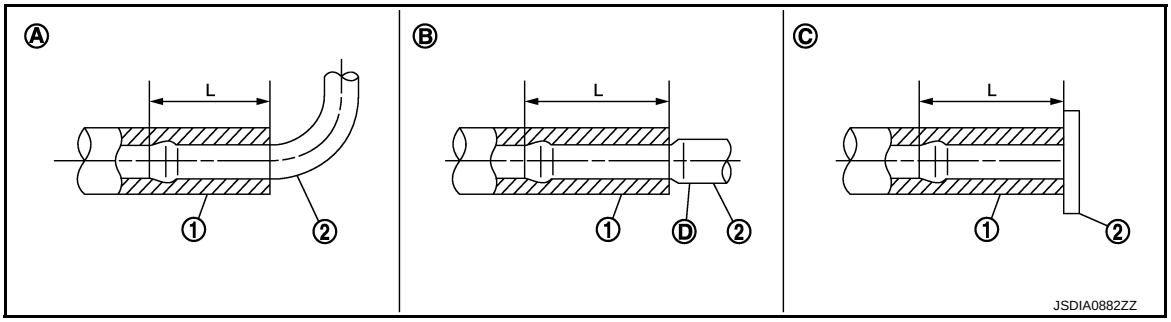

- Set hose clamps (1) at the both ends of A/T fluid cooler hoses (2) with dimension “A” from the hose edge.

Dimension “A” : 5 – 9 mm (0.20 – 0.35 in)

- Hose clamp should not interfere with the bulge of fluid cooler tube.

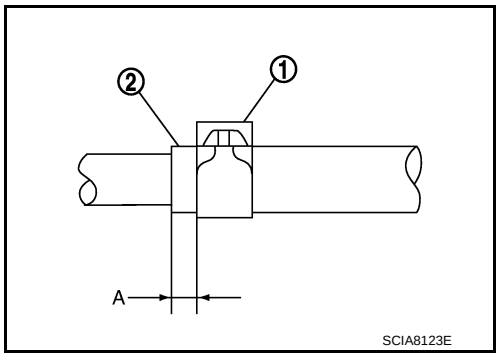

AWD : Inspection and Adjustment

INFOID:0000000006207826

ADJUSTMENT AFTER INSTALLATION

Adjust A/T fluid level. Refer to TM-269, "Adjustment".

INSPECTION AFTER INSTALLATION

Check A/T fluid leakage.

UNIT REMOVAL AND INSTALLATION

TRANSMISSION ASSEMBLY

2WD

2WD : Exploded View

INFOID:0000000006207827

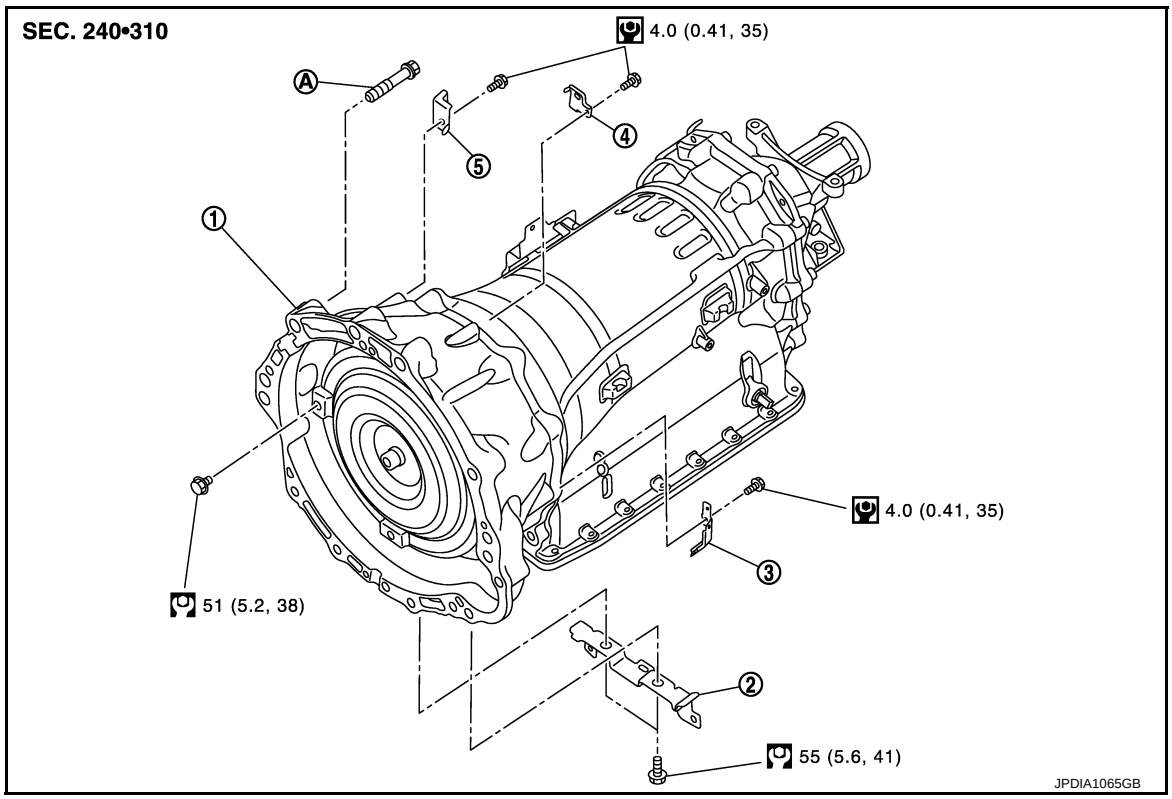

1. A/T assembly
2. Bracket
3. Bracket
4. Bracket
5. Bracket

A. Tightening must be done following the installation procedure. Refer to TM-310, "2WD : Removal and Installation".

Refer to GI-4, "Components" for symbols in the figure.

2WD : Removal and Installation

INFOID:0000000006207828

REMOVAL

CAUTION:

- **When removing the A/T assembly from engine, first remove the crankshaft position sensor (POS) from the A/T assembly.**
- **Be careful not to damage sensor edge.**

1. Shift the selector lever to “P” position, and then release the parking brake.
2. Disconnect the battery cable from the negative terminal.
3. Remove control rod from A/T shift selector assembly. Refer to TM-276, "2WD : Exploded View".
4. Separate propeller shaft assembly. Refer to DLN-102, "Exploded View".
5. Remove engine lower cover with a power tool. Refer to EXT-32, "Exploded View".
6. Remove suspension member stay. Refer to FSU-21, "Exploded View".
7. Remove crankshaft position sensor (POS) from A/T assembly. Refer to EM-276, "Exploded View".
   CAUTION:
   - **Never subject it to impact by dropping or hitting it.**
   - **Never disassemble.**
   - **Never allow metal filings, etc. to get on the sensor's front edge magnetic area.**

- **Never place in an area affected by magnetism.**

8. Remove starter motor. Refer to STR-17, "Exploded View".
9. Remove rear plate cover. Refer to EM-198, "Exploded View (2WD)".
10. Turn crankshaft, and remove the four tightening bolts for drive plate and torque converter.
    CAUTION:
    When turning the crankshaft, turn it clockwise as viewed from the front of the engine.
11. Remove A/T fluid cooler tubes from A/T assembly. Refer to TM-305, "2WD : Exploded View".
12. Plug up openings such as the A/T fluid cooler tube hole.
13. Support A/T assembly with a transmission jack.
    CAUTION:
    When setting the transmission jack, be careful not to allow it to collide against the drain plug and overflow plug.
    NOTE:
    Be placing wooden block between oil pan (upper) and front suspension member, the removal of A/T assembly from engine becomes easier.
14. Remove rear engine mounting member and engine mounting insulator (rear) with a power tool. Refer to EM-224, "2WD : Exploded View".
15. Disconnect A/T assembly connector.
16. Remove harness and brackets.
17. Remove bolts fixing A/T assembly to engine with a power tool.
18. Remove air breather hose, air breather box and bracket. Refer to TM-301, "VQ25HR, VQ37VHR (2WD) : Exploded View".
19. Remove A/T assembly from the vehicle.
    CAUTION:
    - **Secure torque converter to prevent it from dropping.**
    - **Secure A/T assembly to a transmission jack.**
20. Remove manual lever. Refer to TM-280, "Exploded View".

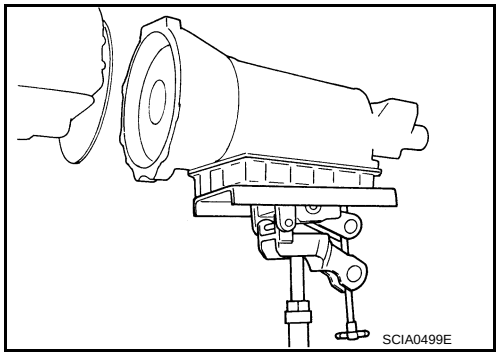

INSTALLATION

Note the following, and install in the reverse order of removal.

CAUTION:

Check fitting of the dowel pins (⬅).

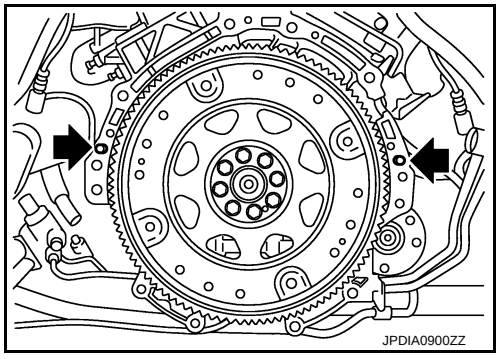

- When installing A/T assembly to the engine, be sure to check dimension “A” to ensure it is within the reference value limit.

B : Scale
C : Straightedge

Dimension “A” : Refer to TM-409, "Torque Converter".

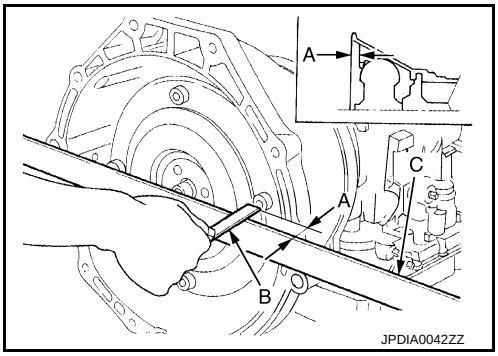

- When installing A/T assembly to the engine, attach the fixing bolts in accordance with the following standard.

Bolt symbol	A	B
Insertion direction	A/T assembly to engine	Engine to A/T assembly
Number of bolts	8	4
Bolt length “L” mm (in)	65 (2.56)	35 (1.38)
Tightening torque N·m (kg-m, ft-lb)	75 (7.7, 55)	46.6 (4.8, 34)

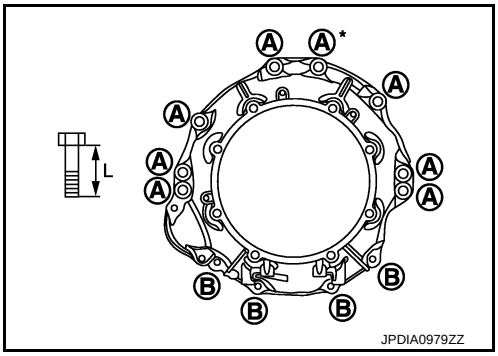

*: Tightening the bolt with bracket.

- Align the positions of tightening bolts for drive plate with those of the torque converter, and temporarily tighten the bolts. Then, tighten the bolts with the specified torque.

CAUTION:
- **When turning crankshaft, turn it clockwise as viewed from the front of the engine.**
- **When tightening the tightening bolts for the torque converter after fixing the crankshaft pulley bolts, be sure to confirm the tightening torque of the crankshaft pulley mounting bolts. Refer to EM-205, "Exploded View".**
- **Rotate crankshaft several turns and check to be sure that A/T rotates freely without binding after converter is installed to drive plate.**

2WD : Inspection and Adjustment

INFOID:0000000006207829

INSPECTION AFTER INSTALLATION

- Check A/T fluid leakage. Refer to TM-267, "Inspection".
- Check A/T position after adjusting A/T positions. Refer to TM-274, "Inspection and Adjustment".

ADJUSTMENT AFTER INSTALLATION

- Adjust A/T fluid level. Refer to TM-269, "Adjustment".
- Adjust A/T position. Refer to TM-274, "Inspection and Adjustment".

AWD

AWD : Exploded View

INFOID:0000000006207830

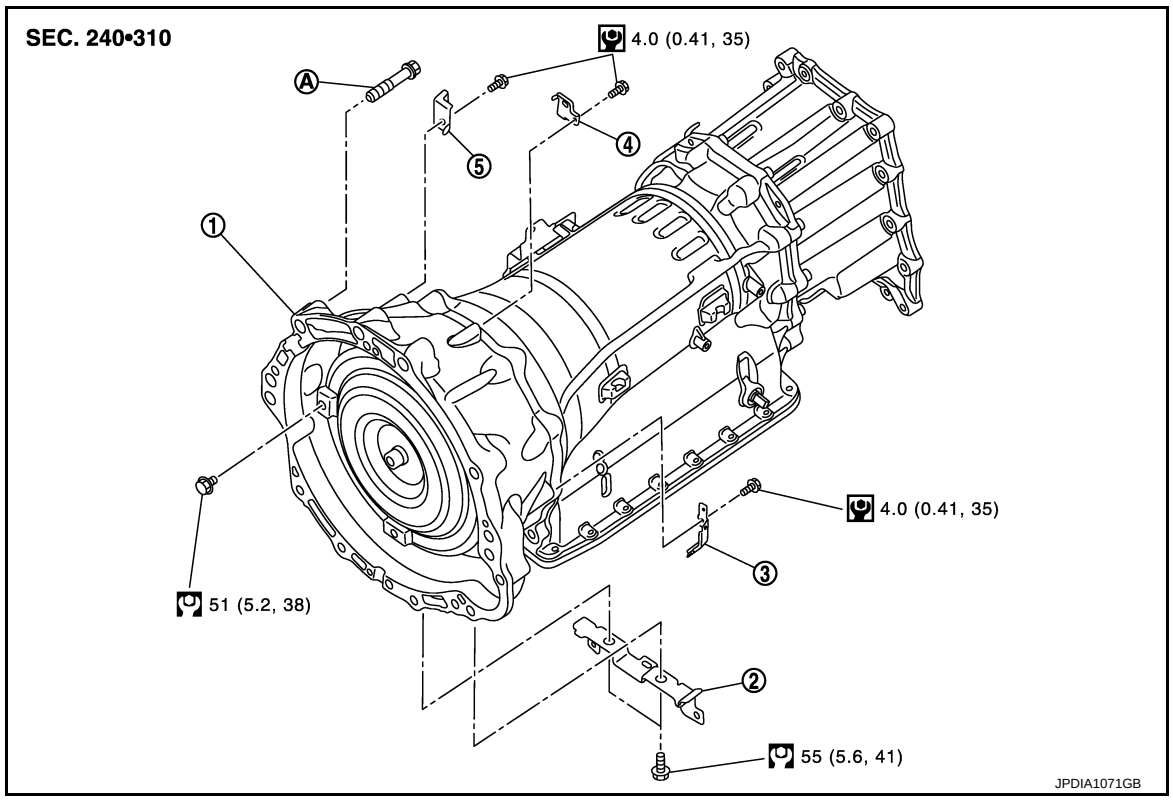

1. A/T assembly
2. Bracket
3. Bracket
4. Bracket
5. Bracket

A. Tightening must be done following the installation procedure. Refer to TM-313, "AWD : Removal and Installation".

Refer to GI-4, "Components" for symbols in the figure.

AWD : Removal and Installation

INFOID:0000000006207831

REMOVAL

CAUTION:

- **When removing the A/T assembly from engine, first remove the crankshaft position sensor (POS) from the A/T assembly.**
- **Be careful not to damage sensor edge.**

1. Shift the selector lever to “P” position, and then release the parking brake.
2. Disconnect the battery cable from the negative terminal.
3. Remove control rod from A/T shift selector assembly. Refer to TM-278, "AWD : Exploded View".
4. Separate propeller shaft assembly (rear). Refer to DLN-110, "Exploded View".
5. Separate propeller shaft assembly (front). Refer to DLN-87, "Exploded View".
6. Remove crankshaft position sensor (POS) from A/T assembly. Refer to EM-276, "Exploded View".
   CAUTION:
   - **Never subject it to impact by dropping or hitting it.**
   - **Never disassemble.**
   - **Never allow metal filings, etc. to get on the sensor's front edge magnetic area.**
   - **Never place in an area affected by magnetism.**
7. Remove starter motor. Refer to STR-17, "Exploded View".
8. Remove rear plate cover. Refer to EM-199, "Exploded View (AWD)".
9. Turn crankshaft, and remove the four tightening bolts for drive plate and torque converter.
   CAUTION:
   When turning the crankshaft, turn it clockwise as viewed from the front of the engine.

10. Remove A/T fluid cooler tubes from A/T assembly. Refer to TM-307, "AWD : Exploded View".
11. Plug up openings such as the A/T fluid cooler tube hole.
12. Support A/T assembly with a transmission jack.
    CAUTION:
    When setting the transmission jack, be careful not to allow it to collide against the drain plug and overflow plug.
    NOTE:
    Be placing wooden block between oil pan (upper) and front suspension member, the removal of A/T assembly from engine becomes easier.
13. Remove rear engine mounting member and engine mounting insulator (rear) with a power tool. Refer to EM-228, "AWD : Exploded View".
14. Disconnect A/T assembly connector and AWD solenoid connector.
15. Remove harness and brackets.
16. Remove bolts fixing A/T assembly to engine with a power tool.
17. Remove air breather hose and air breather vent. Refer to TM-303, "VQ37VHR (AWD) : Exploded View".
18. Remove A/T assembly with transfer assembly from the vehicle.
    CAUTION:
    - **Secure torque converter to prevent it from dropping.**
    - **Secure A/T assembly to a transmission jack.**
19. Remove manual lever. Refer to TM-280, "Exploded View".
20. Remove transfer assembly from A/T assembly with a power tool. Refer to DLN-62, "Exploded View".

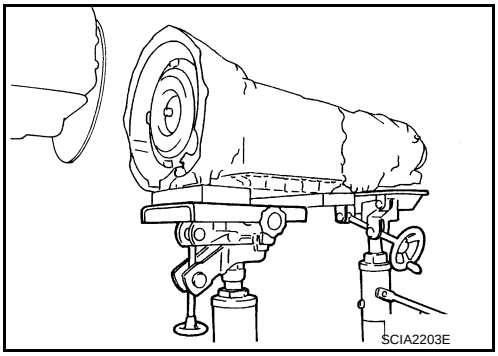

INSTALLATION

Note the following, and install in the reverse order of removal.

CAUTION:

Check fitting of dowel pin (⬅).

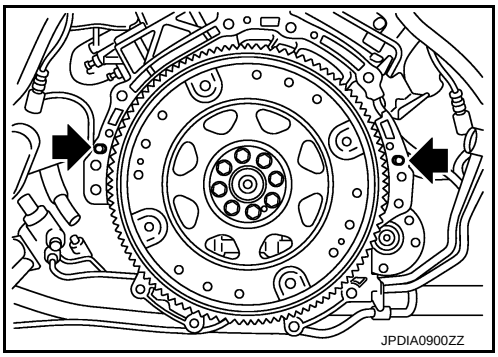

- When installing A/T assembly to the engine, be sure to check dimension “A” to ensure it is within the reference value limit.

B : Scale

C : Straightedge

Dimension “A” **: Refer to TM-409, "Torque Converter".**

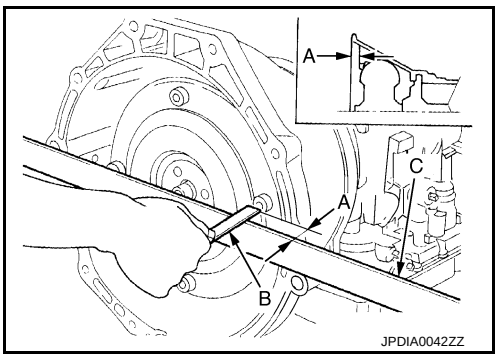

- When installing A/T assembly to the engine, attach the fixing bolts in accordance with the following standard.

Bolt symbol	A	B
Insertion direction	A/T assembly to engine	Engine to A/T assembly
Number of bolts	8	4
Bolt length“ L” mm (in)	65 (2.56)	35 (1.38)
Tightening torque N·m (kg-m, ft-lb)	75 (7.7, 55)	46.6 (4.8, 34)

*: Tightening the bolt with air breather vent.

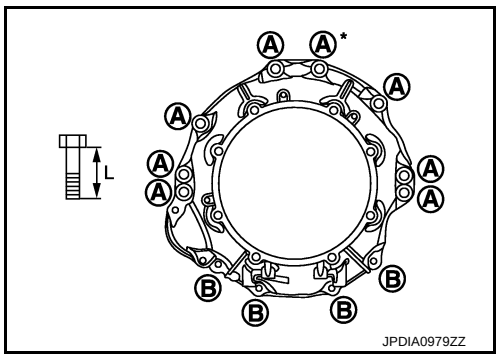

- Align the positions of tightening bolts for drive plate with those of the torque converter, and temporarily tighten the bolts. Then, tighten the bolts with the specified torque.

CAUTION:

- **When turning crankshaft, turn it clockwise as viewed from the front of the engine.**
- **When tightening the tightening bolts for the torque converter after fixing the crankshaft pulley bolts, be sure to confirm the tightening torque of the crankshaft pulley mounting bolts. Refer to EM-205, "Exploded View".**
- **Rotate crankshaft several turns and check to be sure that A/T rotates freely without binding after converter is installed to drive plate.**

AWD : Inspection and Adjustment

INFOID:0000000006207832

INSPECTION AFTER INSTALLATION

- Check A/T fluid leakage. Refer to TM-267, "Inspection".
- Check A/T position after adjusting A/T positions. Refer to TM-274, "Inspection and Adjustment".

ADJUSTMENT AFTER INSTALLATION

- Adjust A/T fluid level. Refer to TM-269, "Adjustment".
- Adjust A/T position. Refer to TM-274, "Inspection and Adjustment".

UNIT DISASSEMBLY AND ASSEMBLY

TRANSMISSION ASSEMBLY

Exploded View

INFOID:0000000006365104

2WD MODELS

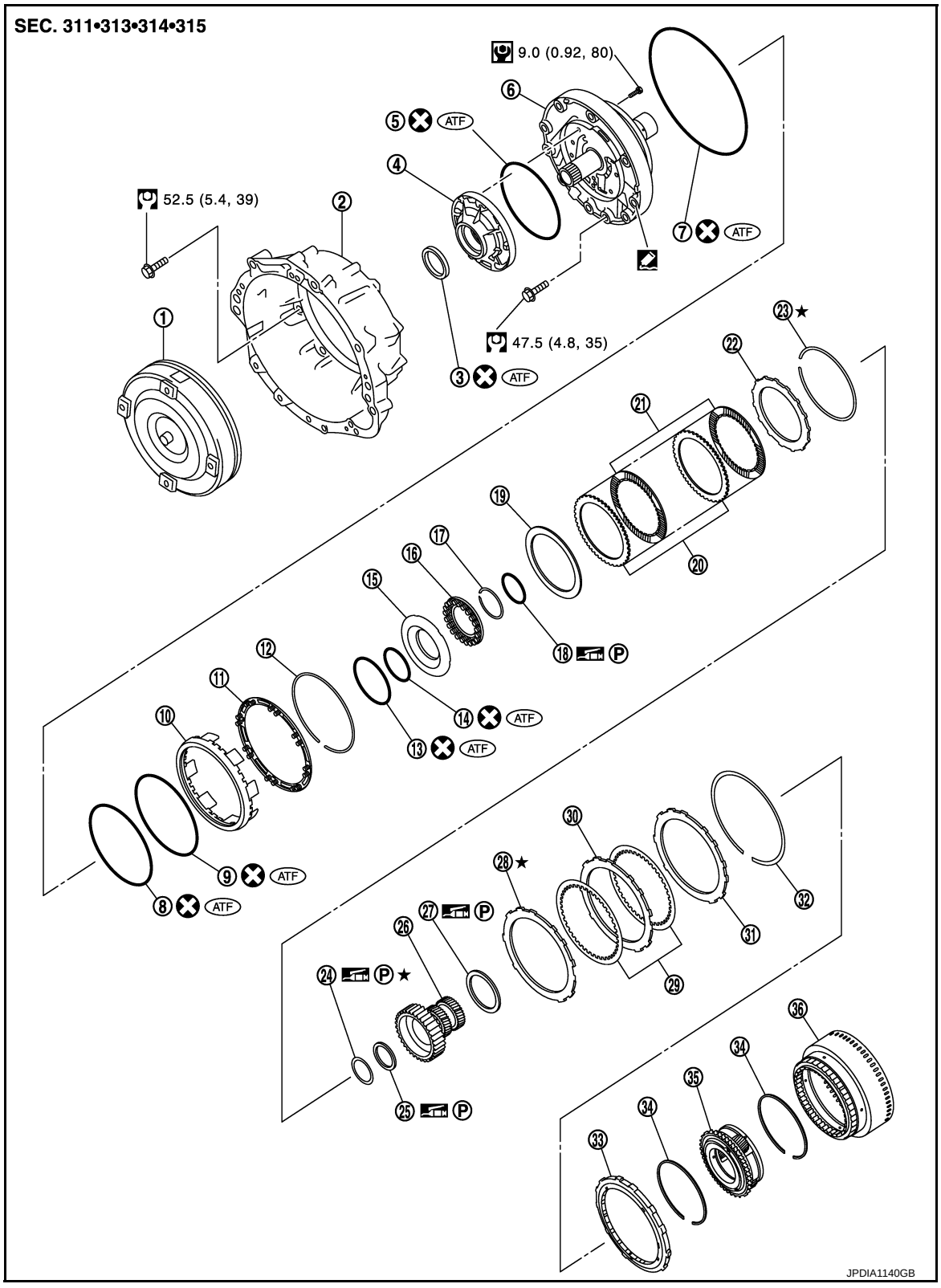

1. Torque converter	2. Converter housing	3. Oil pump housing oil seal
4. Oil pump housing	5. O-ring	6. Oil pump cover
7. O-ring	8. D-ring	9. D-ring
10. Front brake piston	11. Front brake spring retainer	12. Snap ring
13. D-ring	14. D-ring	15. 2346 brake piston
16. 2346 brake spring retainer	17. Snap ring	18. Seal ring
19. 2346 brake dish plate	20. 2346 brake driven plate	21. 2346 brake drive plate
22. 2346 brake retaining plate	23. Snap ring	24. Bearing race
25. Needle bearing	26. Under drive sun gear	27. Needle bearing
28. Front brake retaining plate	29. Front brake drive plate	30. Front brake driven plate
31. Front brake retaining plate	32. Snap ring	33. 1st one-way clutch
34. Snap ring	35. Under drive carrier assembly	36. Front brake hub assembly

: Apply Genuine RTV silicone sealant or equivalent. Refer to GI-22, "Recommended Chemical Products and Sealants".
Refer to GI-4, "Components" for symbols not described on the above.

TYPE 1

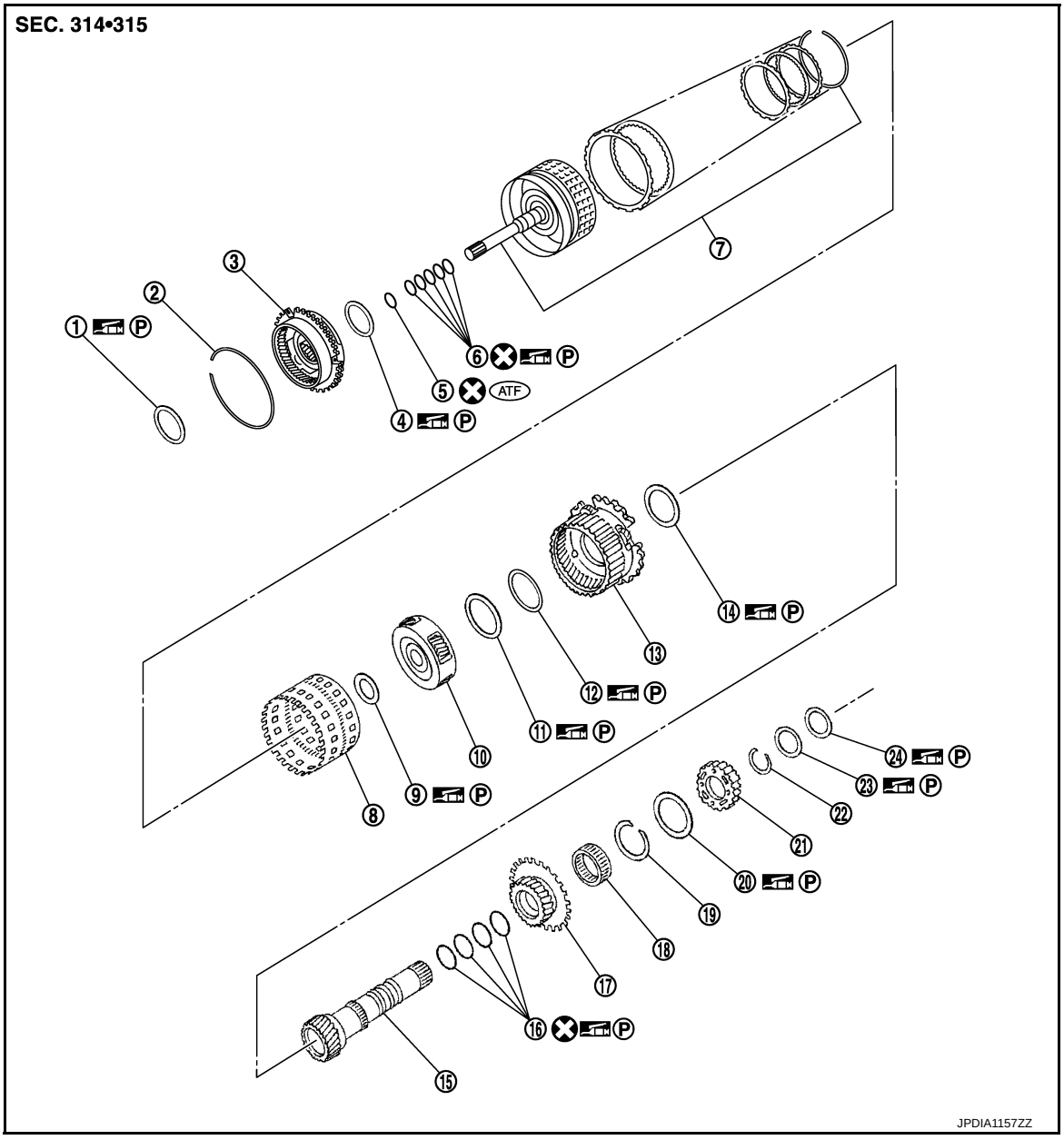

1. Needle bearing
2. Snap ring
3. Front carrier assembly
4. Needle bearing
5. O-ring
6. Seal ring
7. Input clutch assembly
8. Rear internal gear
9. Needle bearing
10. Mid carrier assembly
11. Needle bearing
12. Bearing race
13. Rear carrier assembly
14. Needle bearing
15. Mid sun gear
16. Seal ring
17. Rear sun gear
18. 2nd one-way clutch
19. Snap ring
20. Needle bearing
21. High and low reverse clutch hub
22. Snap ring
23. Bearing race
24. Needle bearing

Refer to GI-4, "Components" for symbols not described on the above.

TYPE 2

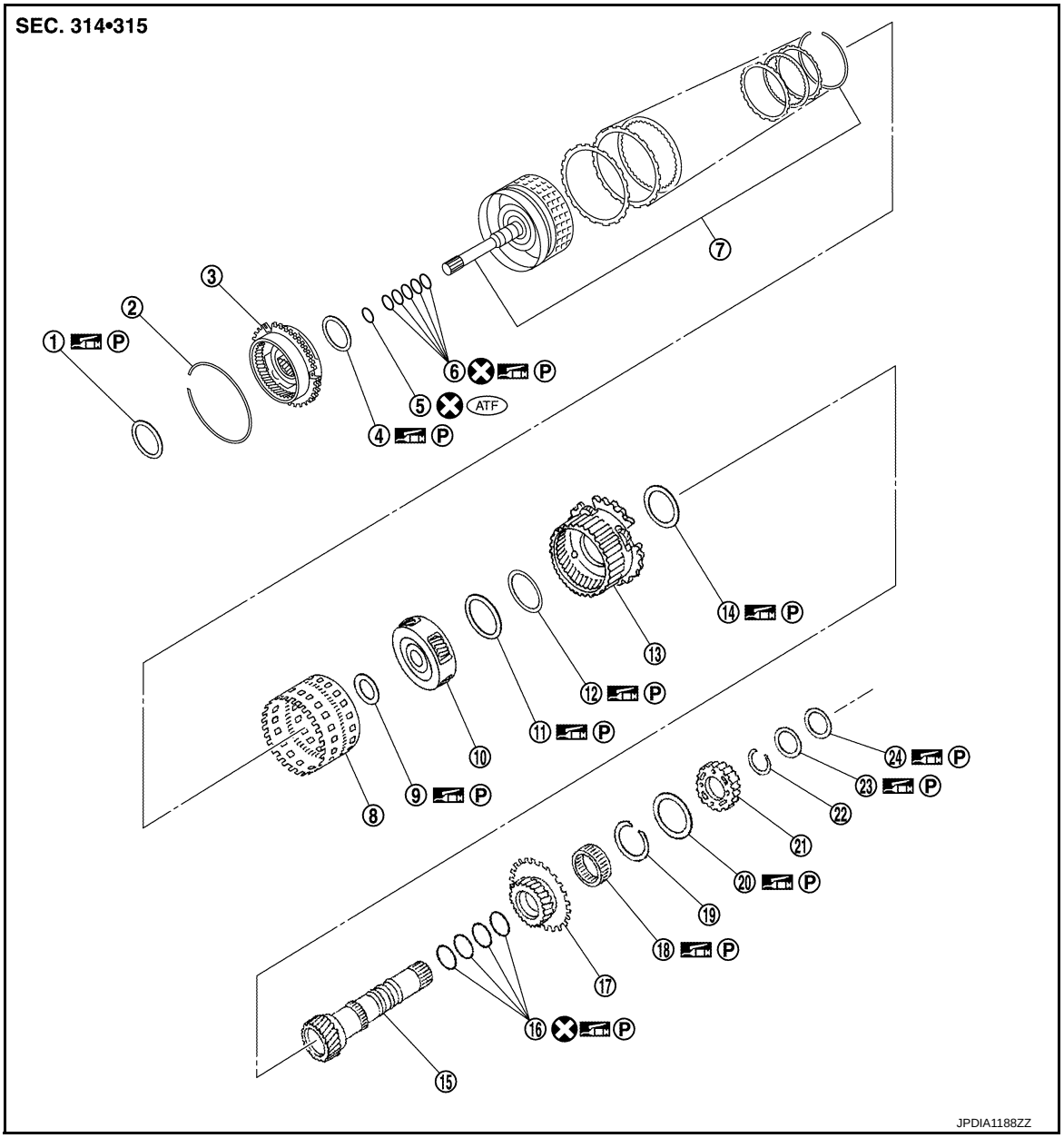

1. Needle bearing
2. Snap ring
3. Front carrier assembly
4. Needle bearing
5. O-ring
6. Seal ring
7. Input clutch assembly
8. Rear internal gear
9. Needle bearing
10. Mid carrier assembly
11. Needle bearing
12. Bearing race
13. Rear carrier assembly
14. Needle bearing
15. Mid sun gear
16. Seal ring
17. Rear sun gear
18. 2nd one-way clutch

19. Snap ring
20. Needle bearing
21. High and low reverse clutch hub
22. Snap ring
23. Bearing race
24. Needle bearing

Refer to GI-4, "Components" for symbols in the figure.

TYPE 1

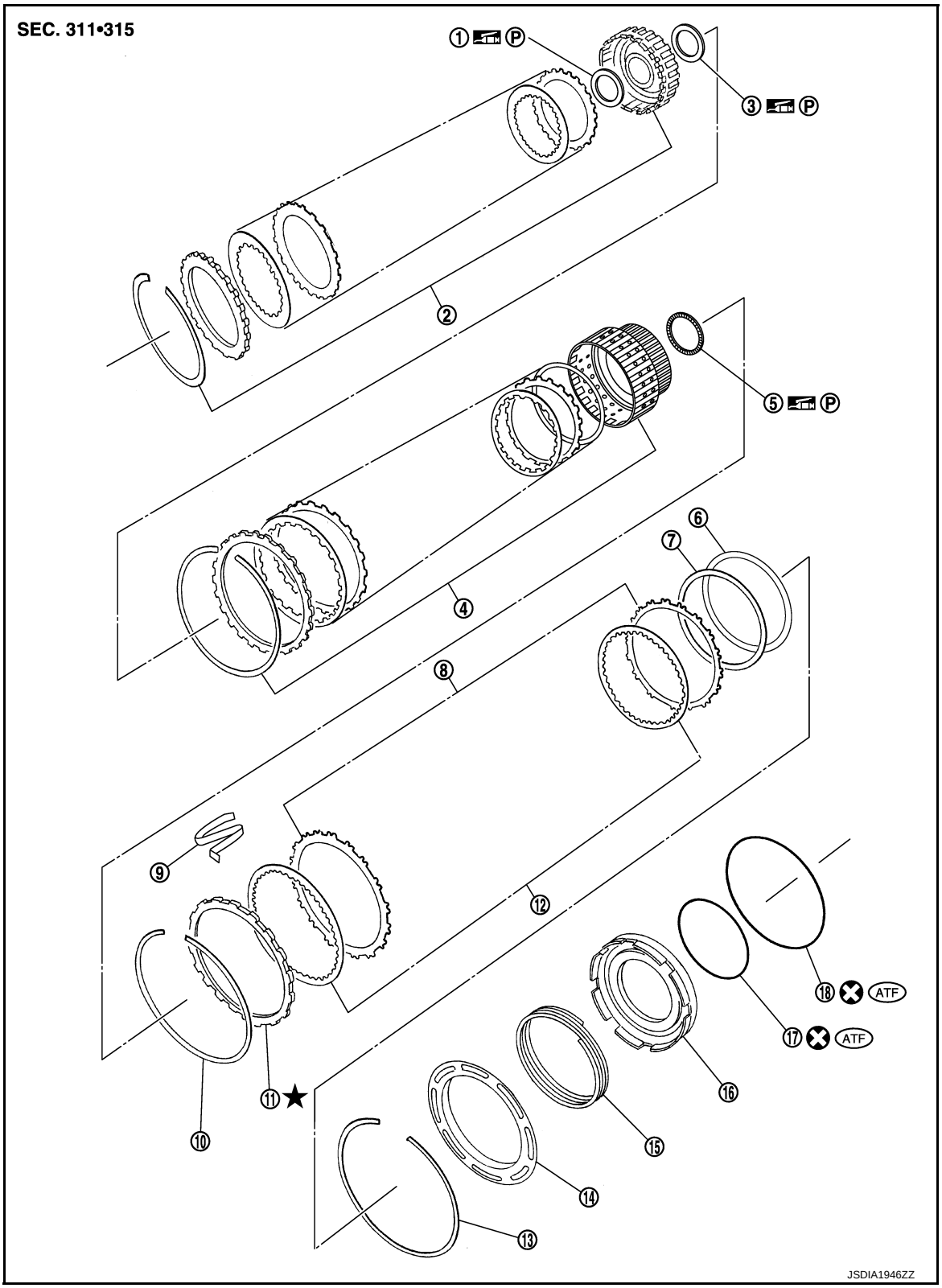

1. Bearing race
2. High and low reverse clutch assembly
3. Needle bearing
4. Direct clutch assembly
5. Needle bearing
6. Reverse brake dish plate

7. Reverse brake dish plate
8. Reverse brake driven plate
9. N-spring
10. Snap ring
11. Reverse brake retaining plate
12. Reverse brake drive plate
13. Snap ring
14. Reverse brake spring retainer
15. Reverse brake return spring
16. Reverse brake piston
17. D-ring
18. D-ring

Refer to GI-4, "Components" for symbols in the figure.

TYPE 2

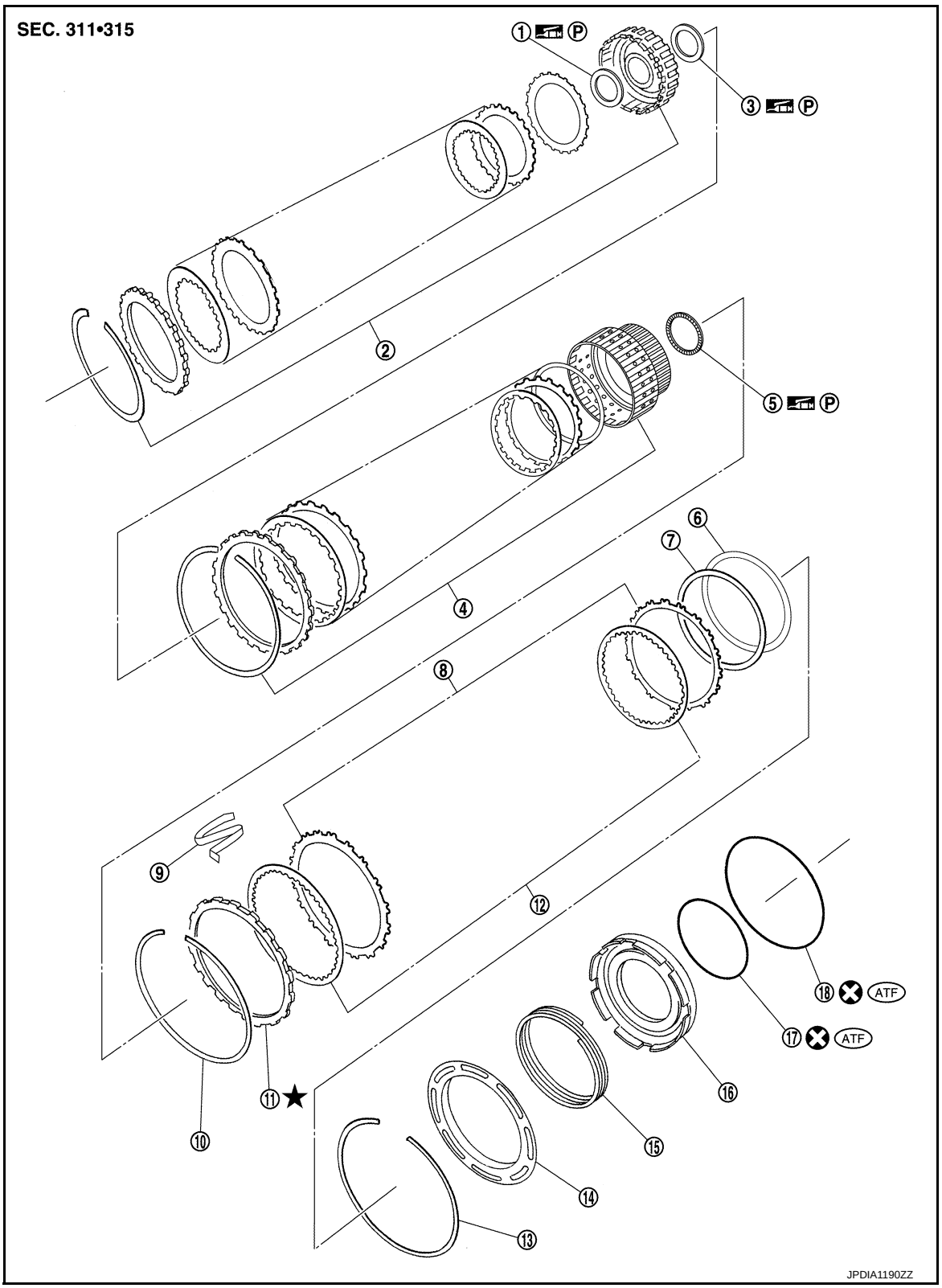

1. Bearing race	2. High and low reverse clutch assembly	3. Needle bearing
4. Direct clutch assembly	5. Needle bearing	6. Reverse brake dish plate
7. Reverse brake dish plate	8. Reverse brake driven plate	9. N-spring
10. Snap ring	11. Reverse brake retaining plate	12. Reverse brake drive plate
13. Snap ring	14. Reverse brake spring retainer	15. Reverse brake return spring
16. Reverse brake piston	17. D-ring	18. D-ring

Refer to GI-4, "Components" for symbols in the figure.

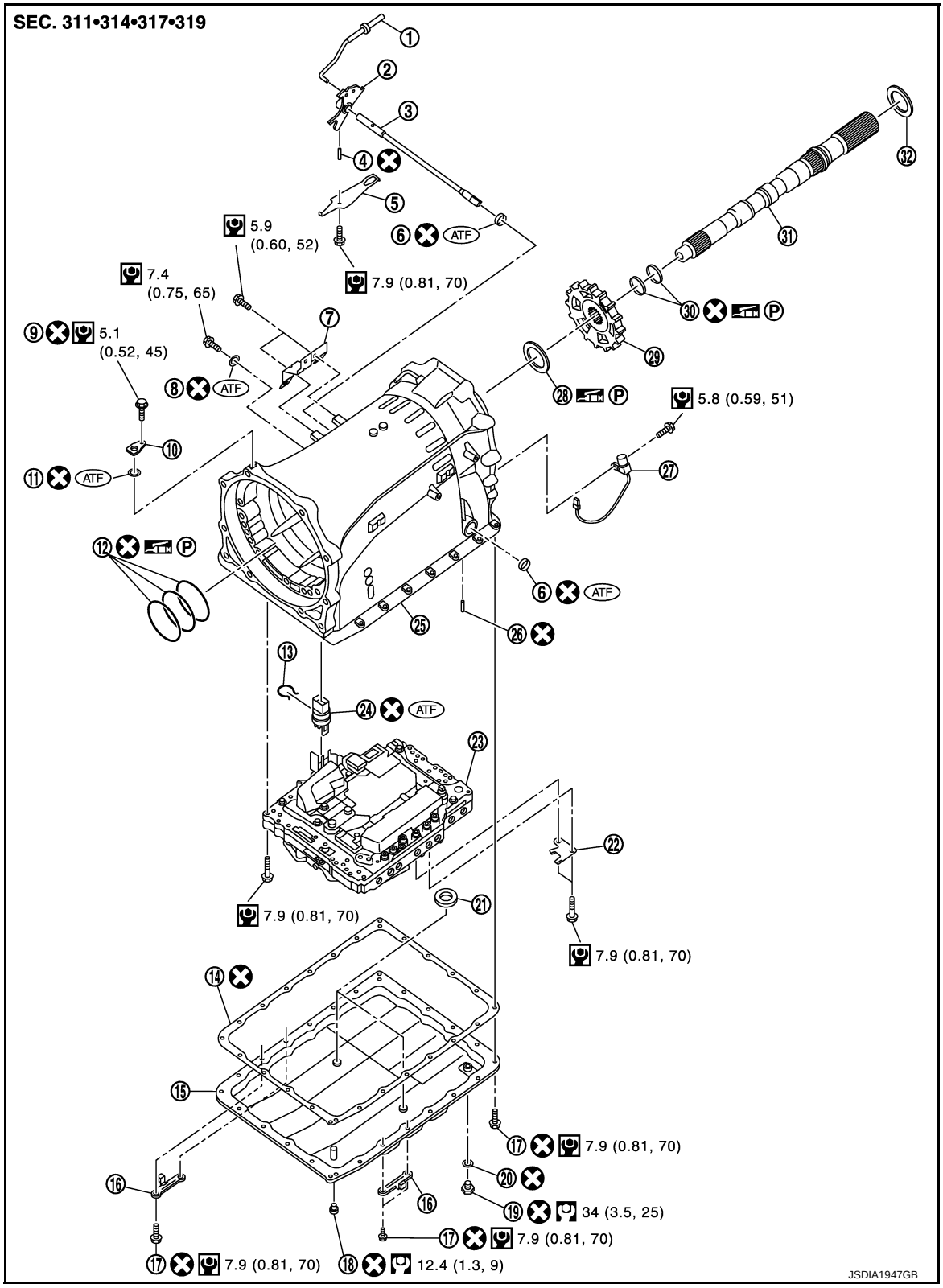

1. Parking rod
2. Manual plate
3. Manual shaft
4. Retaining pin
5. Detent spring
6. Oil seal
7. Bracket
8. O-ring
9. Self-sealing bolt
10. Baffle plate
11. O-ring
12. Seal ring
13. Snap ring
14. Oil pan gasket
15. Oil pan
16. Clip
17. Oil pan mounting bolt
18. Overflow plug

19.	Drain plug	20.	Drain plug gasket	21.	Magnet
22.	Clip	23.	Control valve & TCM	24.	Joint connector
25.	Transmission case	26.	Retaining pin	27.	Output speed sensor
28.	Needle bearing	29.	Parking gear	30.	Seal ring
31.	Output shaft	32.	Bearing race		

Refer to GI-4, "Components" for symbols in the figure.

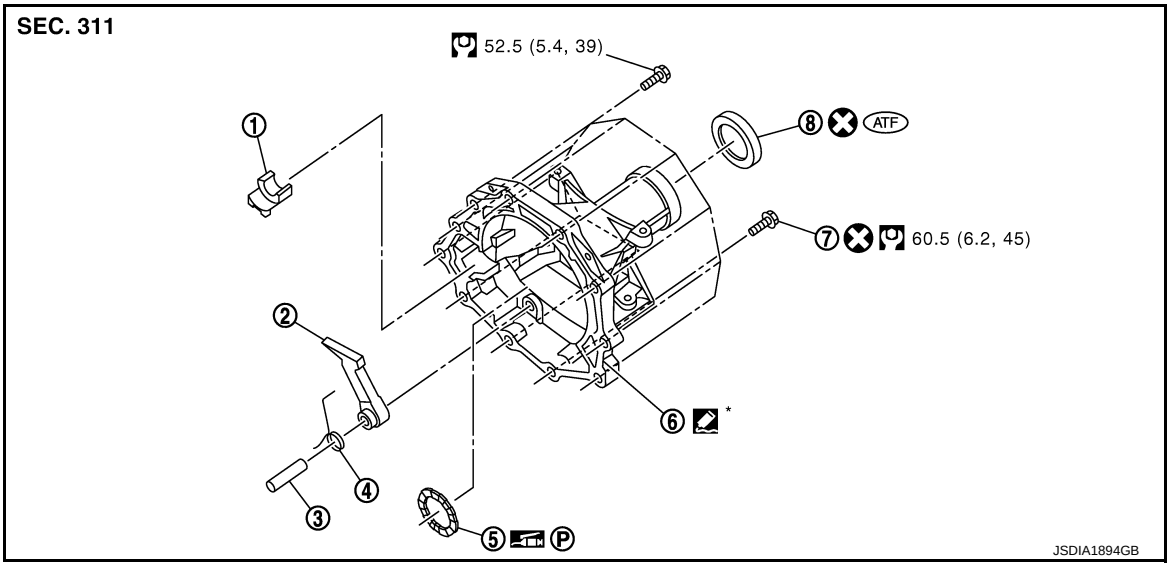

1.	Parking actuator support	2.	Parking pawl	3.	Pawl shaft
4.	Return spring	5.	Needle bearing	6.	Rear extension
7.	Self-sealing bolt	8.	Rear oil seal		

*: Apply Genuine Anaerobic Liquid Gasket or equivalent. Refer to GI-22, "Recommended Chemical Products and Sealants".

Refer to GI-4, "Components" for symbols in the figure.

AWD MODELS

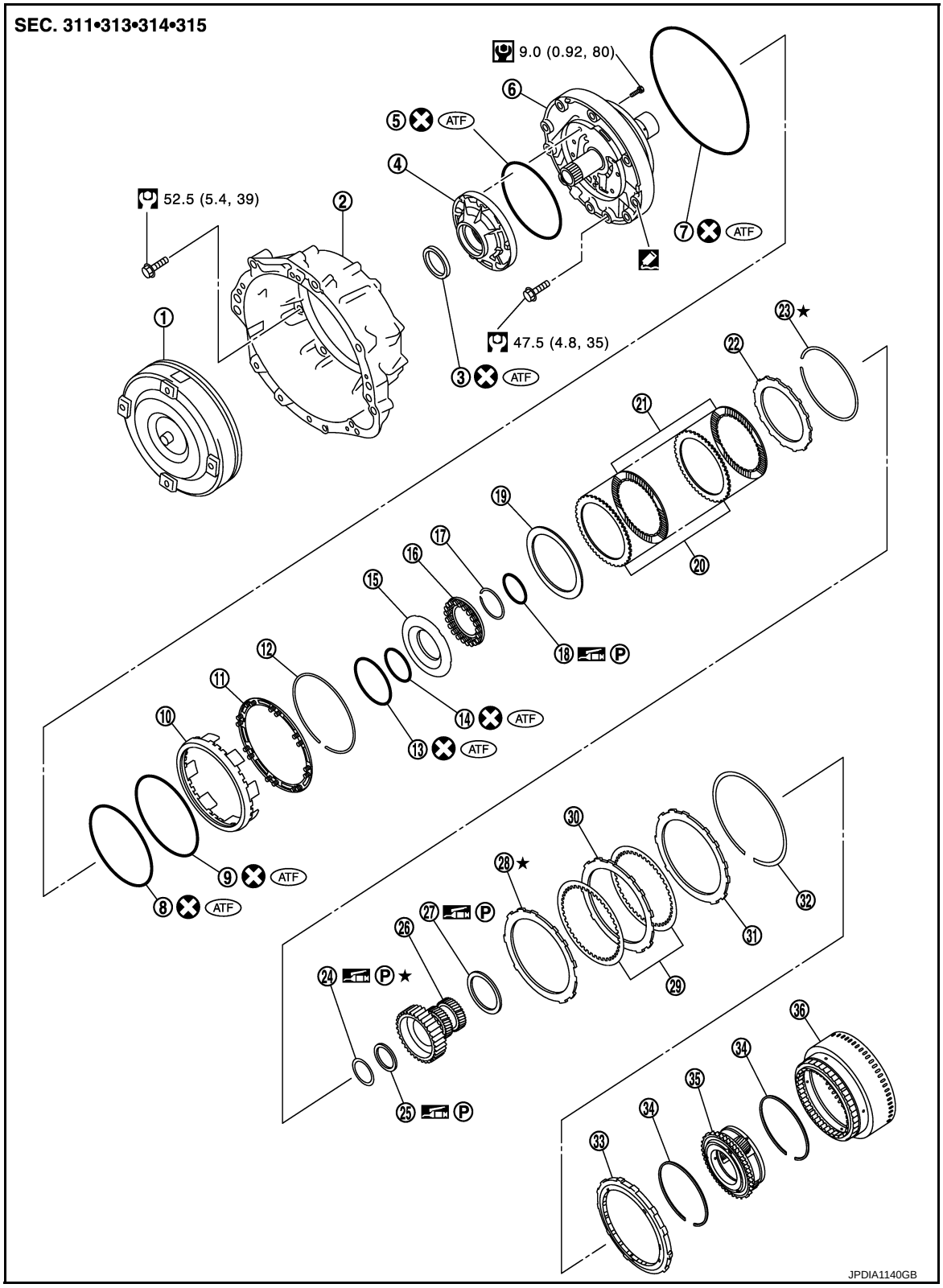

1. Torque converter
2. Converter housing
3. Oil pump housing oil seal
4. Oil pump housing
5. O-ring
6. Oil pump cover
7. O-ring
8. D-ring
9. D-ring
10. Front brake piston
11. Front brake spring retainer
12. Snap ring
13. D-ring
14. D-ring
15. 2346 brake piston
16. 2346 brake spring retainer
17. Snap ring
18. Seal ring

19.	2346 brake dish plate	20.	2346 brake driven plate	21.	2346 brake drive plate
22.	2346 brake retaining plate	23.	Snap ring	24.	Bearing race
25.	Needle bearing	26.	Under drive sun gear	27.	Needle bearing
28.	Front brake retaining plate	29.	Front brake drive plate	30.	Front brake driven plate
31.	Front brake retaining plate	32.	Snap ring	33.	1st one-way clutch
34.	Snap ring	35.	Under drive carrier assembly	36.	Front brake hub assembly

: Apply Genuine RTV silicone sealant or equivalent. Refer to GI-22, "Recommended Chemical Products and Sealants".
Refer to GI-4, "Components" for symbols not described on the above.

TYPE 1

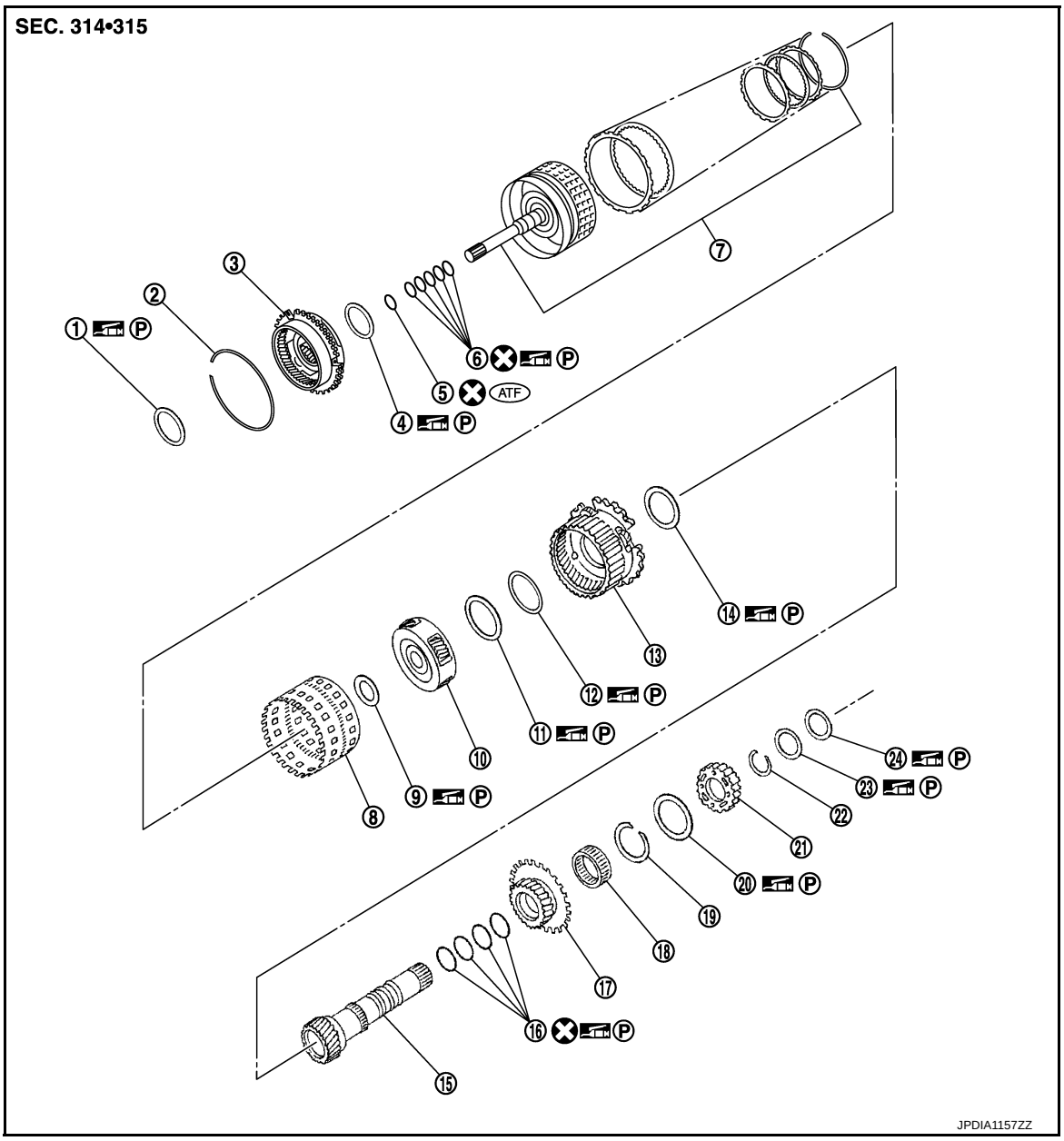

1.	Needle bearing	2.	Snap ring	3.	Front carrier assembly
4.	Needle bearing	5.	O-ring	6.	Seal ring
7.	Input clutch assembly	8.	Rear internal gear	9.	Needle bearing
10.	Mid carrier assembly	11.	Needle bearing	12.	Bearing race
13.	Rear carrier assembly	14.	Needle bearing	15.	Mid sun gear
16.	Seal ring	17.	Rear sun gear	18.	2nd one-way clutch
19.	Snap ring	20.	Needle bearing	21.	High and low reverse clutch hub

22. Snap ring
23. Bearing race
24. Needle bearing

Refer to GI-4, "Components" for symbols not described on the above.

TYPE 2

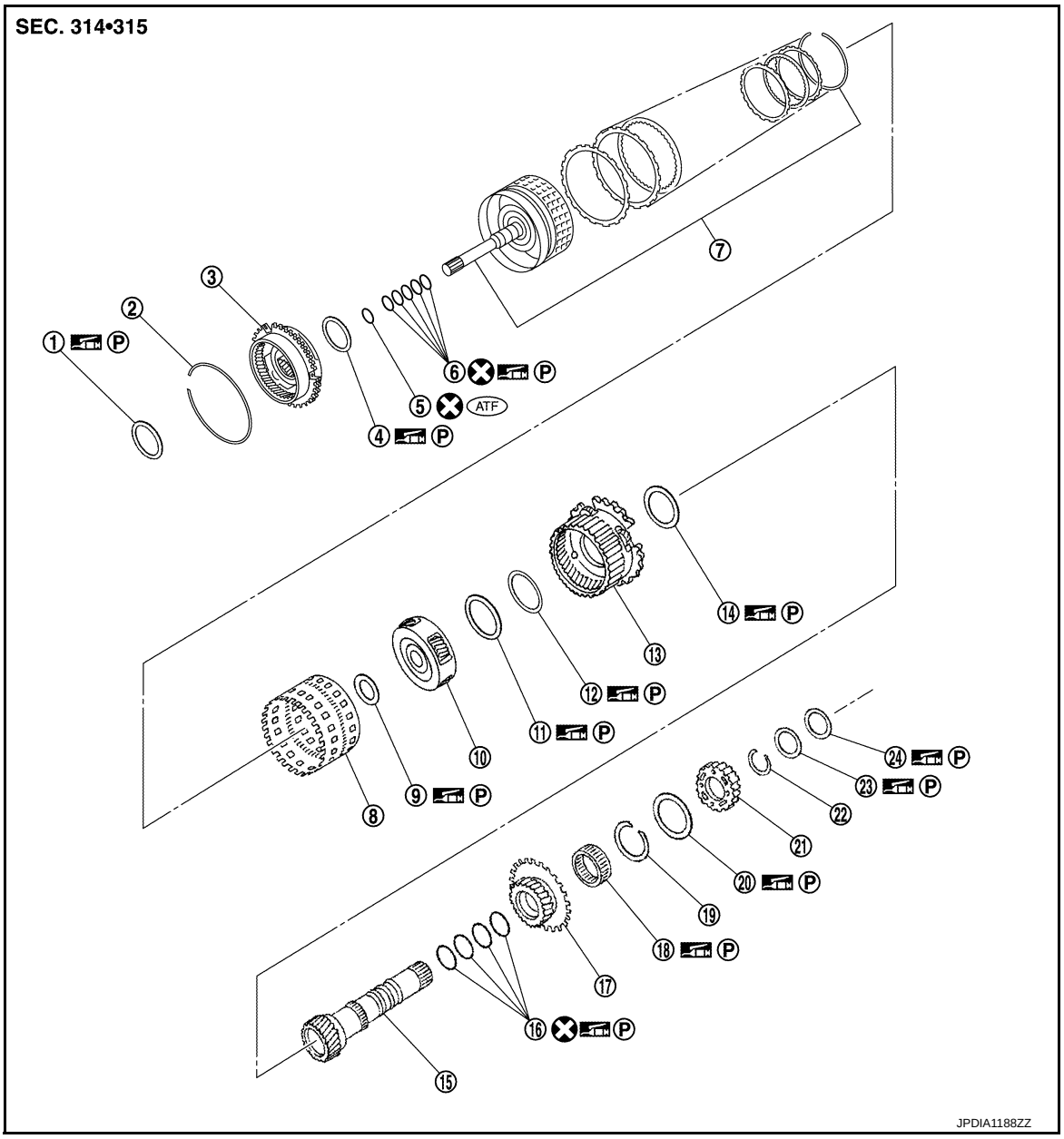

1. Needle bearing
2. Snap ring
3. Front carrier assembly
4. Needle bearing
5. O-ring
6. Seal ring
7. Input clutch assembly
8. Rear internal gear
9. Needle bearing
10. Mid carrier assembly
11. Needle bearing
12. Bearing race
13. Rear carrier assembly
14. Needle bearing
15. Mid sun gear
16. Seal ring
17. Rear sun gear
18. 2nd one-way clutch
19. Snap ring
20. Needle bearing
21. High and low reverse clutch hub
22. Snap ring
23. Bearing race
24. Needle bearing

Refer to GI-4, "Components" for symbols in the figure.

TYPE 1

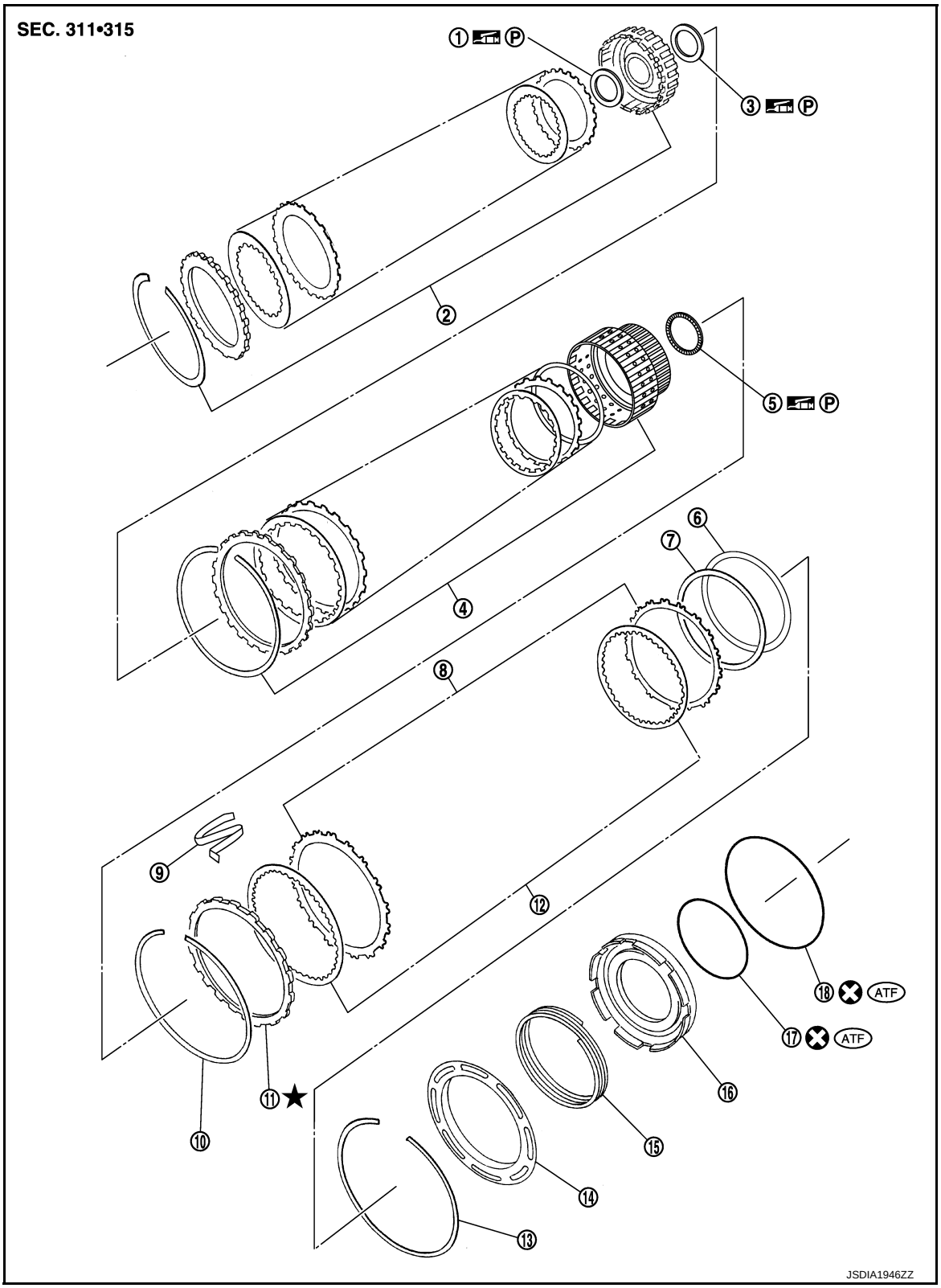

1. Bearing race
2. High and low reverse clutch assembly
3. Needle bearing
4. Direct clutch assembly
5. Needle bearing
6. Reverse brake dish plate
7. Reverse brake dish plate
8. Reverse brake driven plate
9. N-spring
10. Snap ring
11. Reverse brake retaining plate
12. Reverse brake drive plate
13. Snap ring
14. Reverse brake spring retainer
15. Reverse brake return spring

16. Reverse brake piston
17. D-ring
18. D-ring

Refer to GI-4, "Components" for symbols in the figure.

TYPE 2

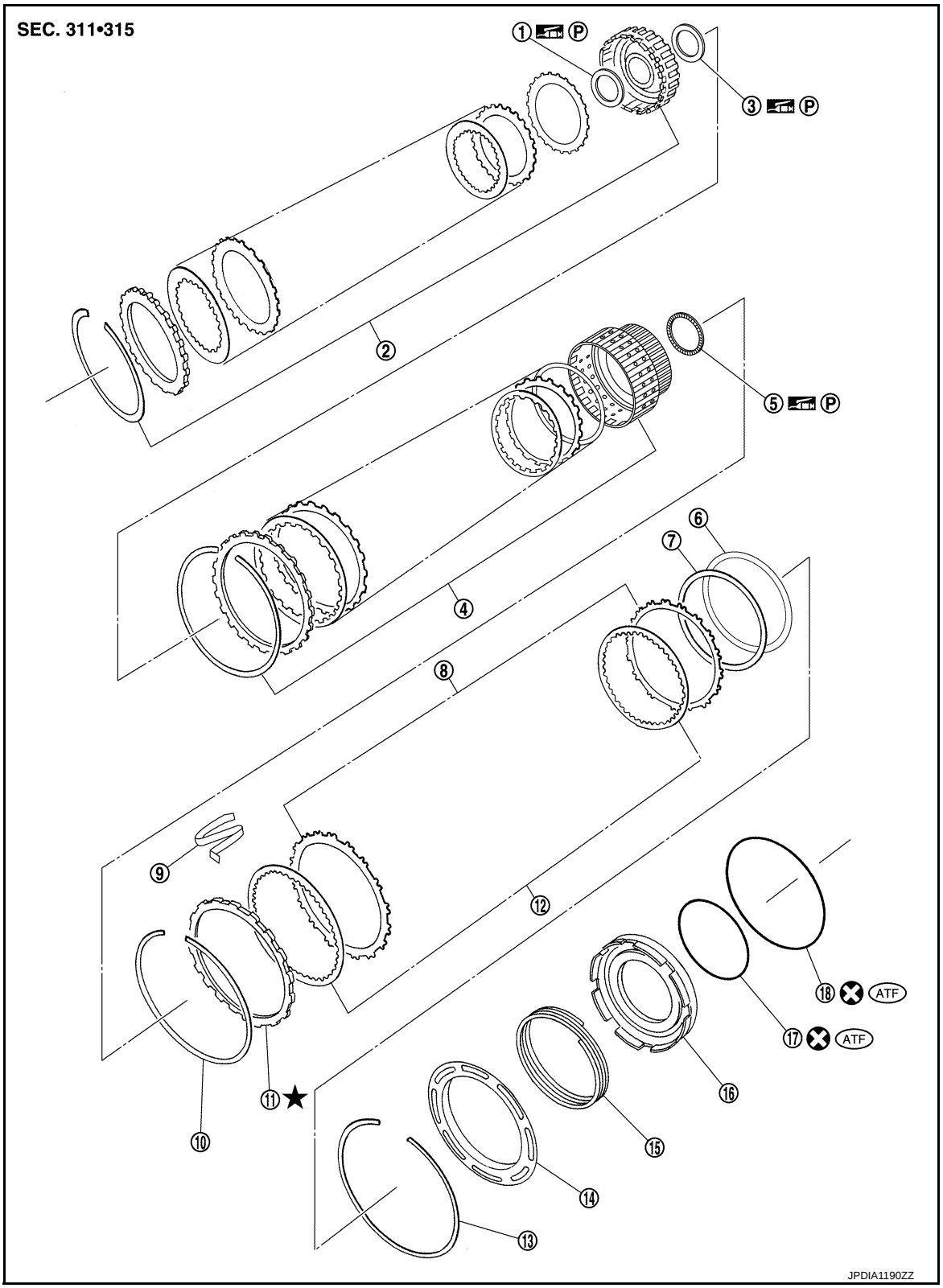

1. Bearing race
2. High and low reverse clutch assembly
3. Needle bearing
4. Direct clutch assembly
5. Needle bearing
6. Reverse brake dish plate
7. Reverse brake dish plate
8. Reverse brake driven plate
9. N-spring

10. Snap ring
11. Reverse brake retaining plate
12. Reverse brake drive plate
13. Snap ring
14. Reverse brake spring retainer
15. Reverse brake return spring
16. Reverse brake piston
17. D-ring
18. D-ring

Refer to GI-4, "Components" for symbols in the figure.

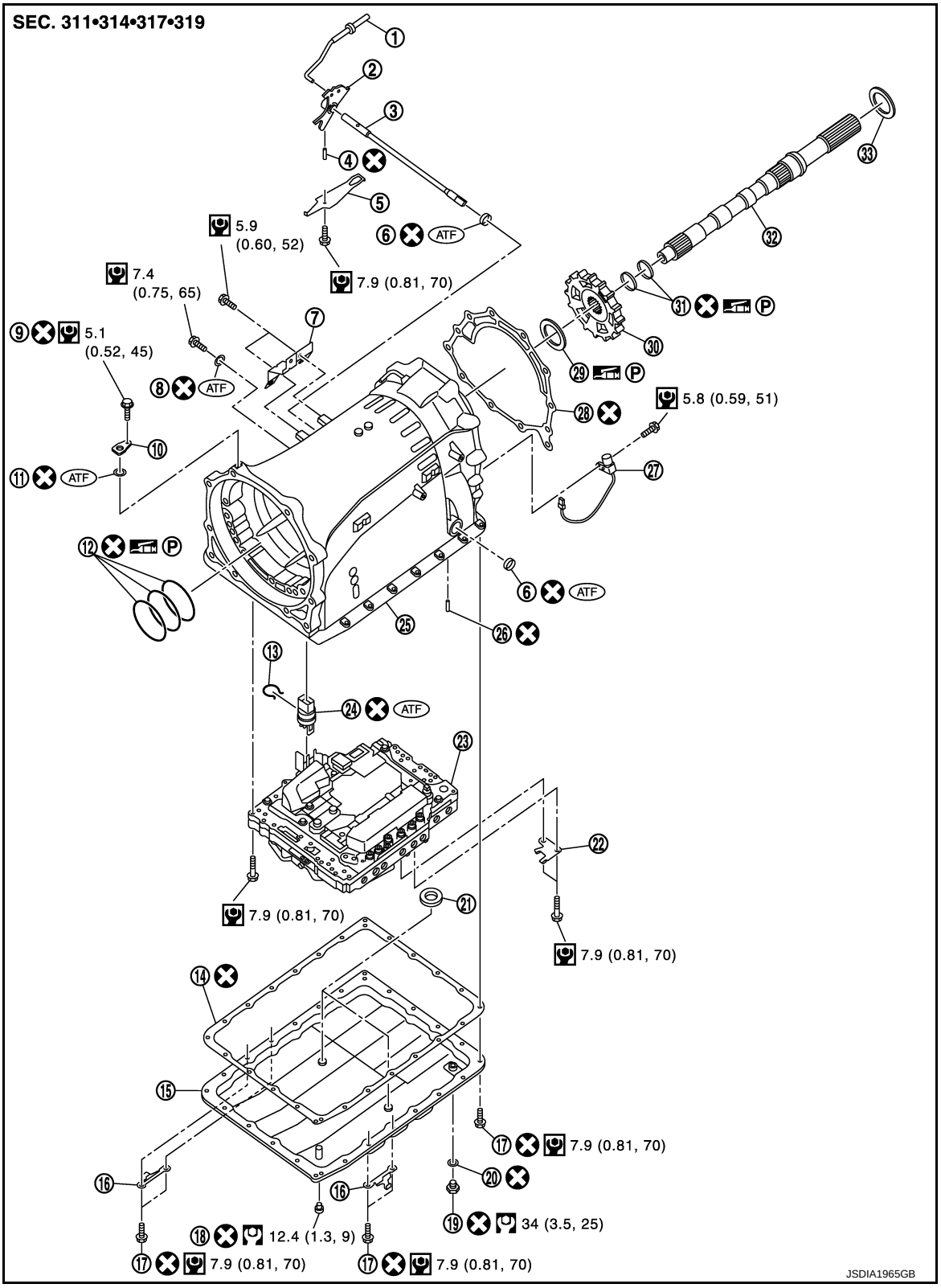

1. Parking rod
2. Manual plate
3. Manual shaft
4. Retaining pin
5. Detent spring
6. Oil seal

7.	Bracket	8.	O-ring	9.	Self-sealing bolt
10.	Baffle plate	11.	O-ring	12.	Seal ring
13.	Snap ring	14.	Oil pan gasket	15.	Oil pan
16.	Clip	17.	Oil pan mounting bolt	18.	Overflow plug
19.	Drain plug	20.	Drain plug gasket	21.	Magnet
22.	Clip	23.	Control valve & TCM	24.	Joint connector
25.	Transmission case	26.	Retaining pin	27.	Output speed sensor
28.	Gasket	29.	Needle bearing	30.	Parking gear
31.	Seal ring	32.	Output shaft	33.	Bearing race

Refer to GI-4, "Components" for symbols in the figure.

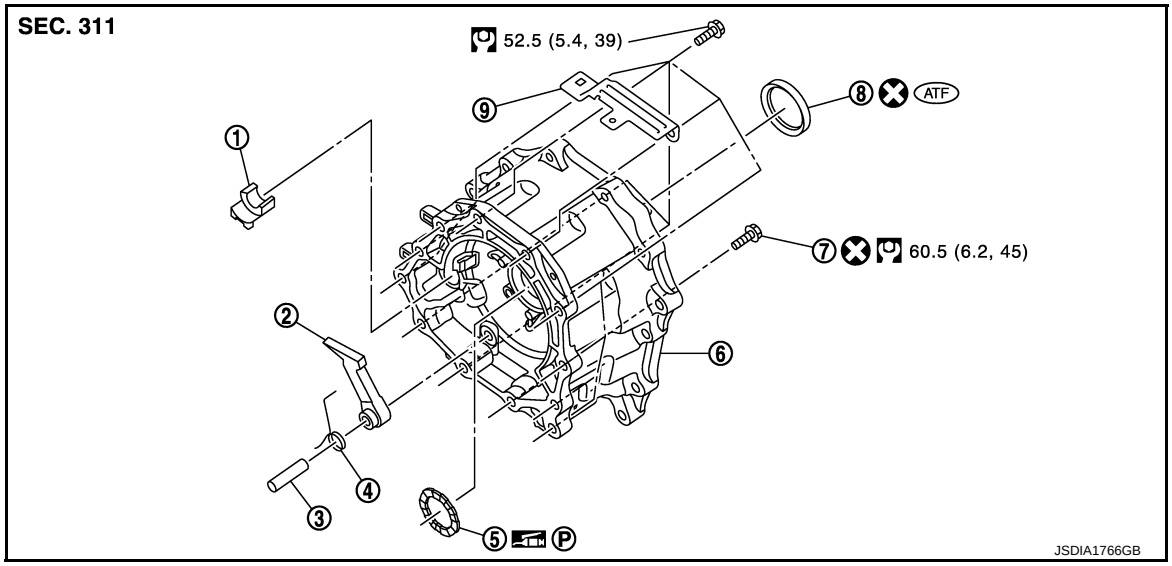

1.	Parking actuator support	2.	Parking pawl	3.	Pawl shaft
4.	Return spring	5.	Needle bearing	6.	Self-sealing bolt
7.	Rear oil seal	8.	Adapter case	9.	Bracket

Refer to GI-4, "Components" for symbols in the figure.

Oil Channel

INFOID:0000000006365105

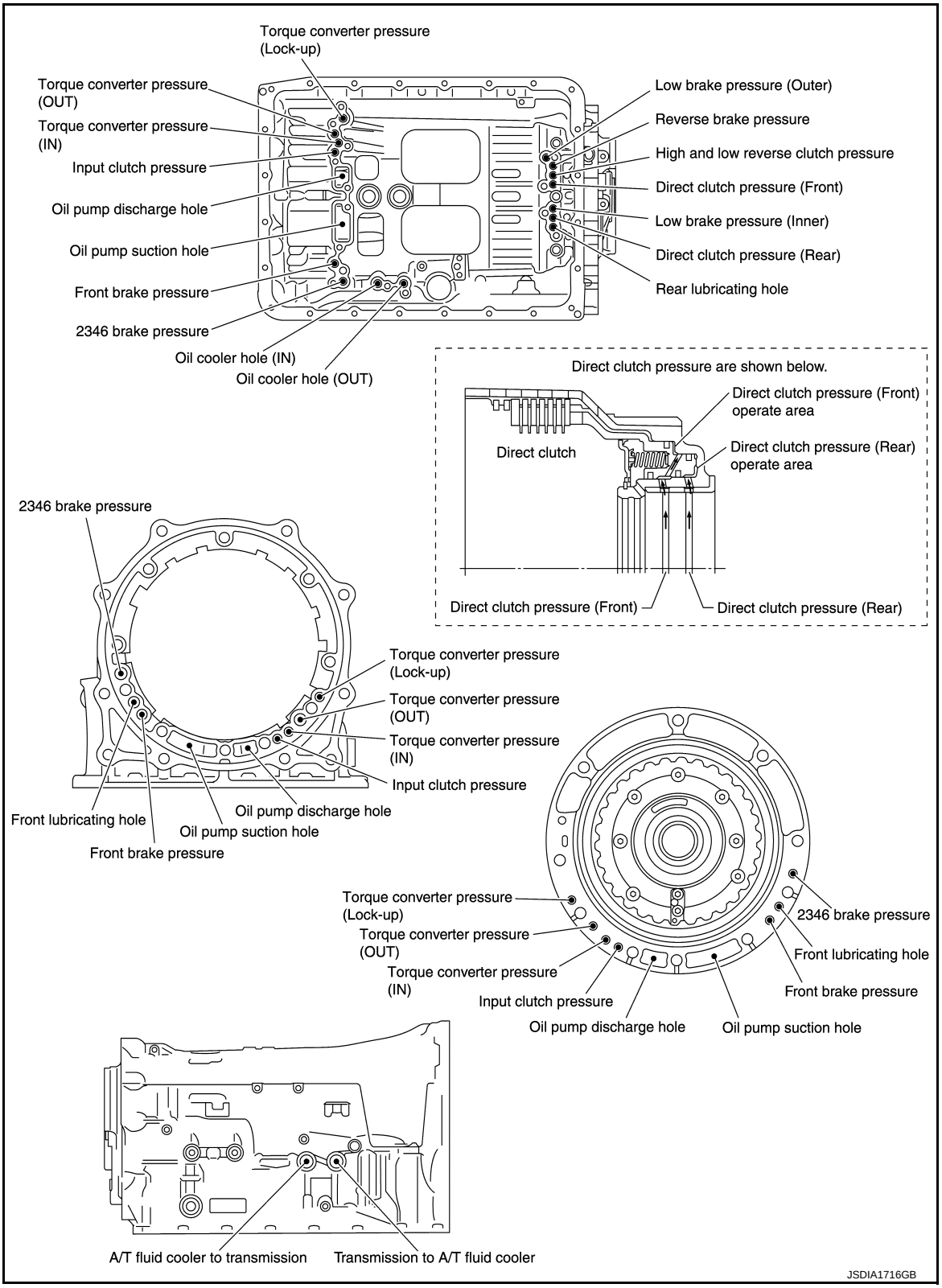

Location of Needle Bearings and Bearing Races

INFOID:0000000006365106

2WD MODELS

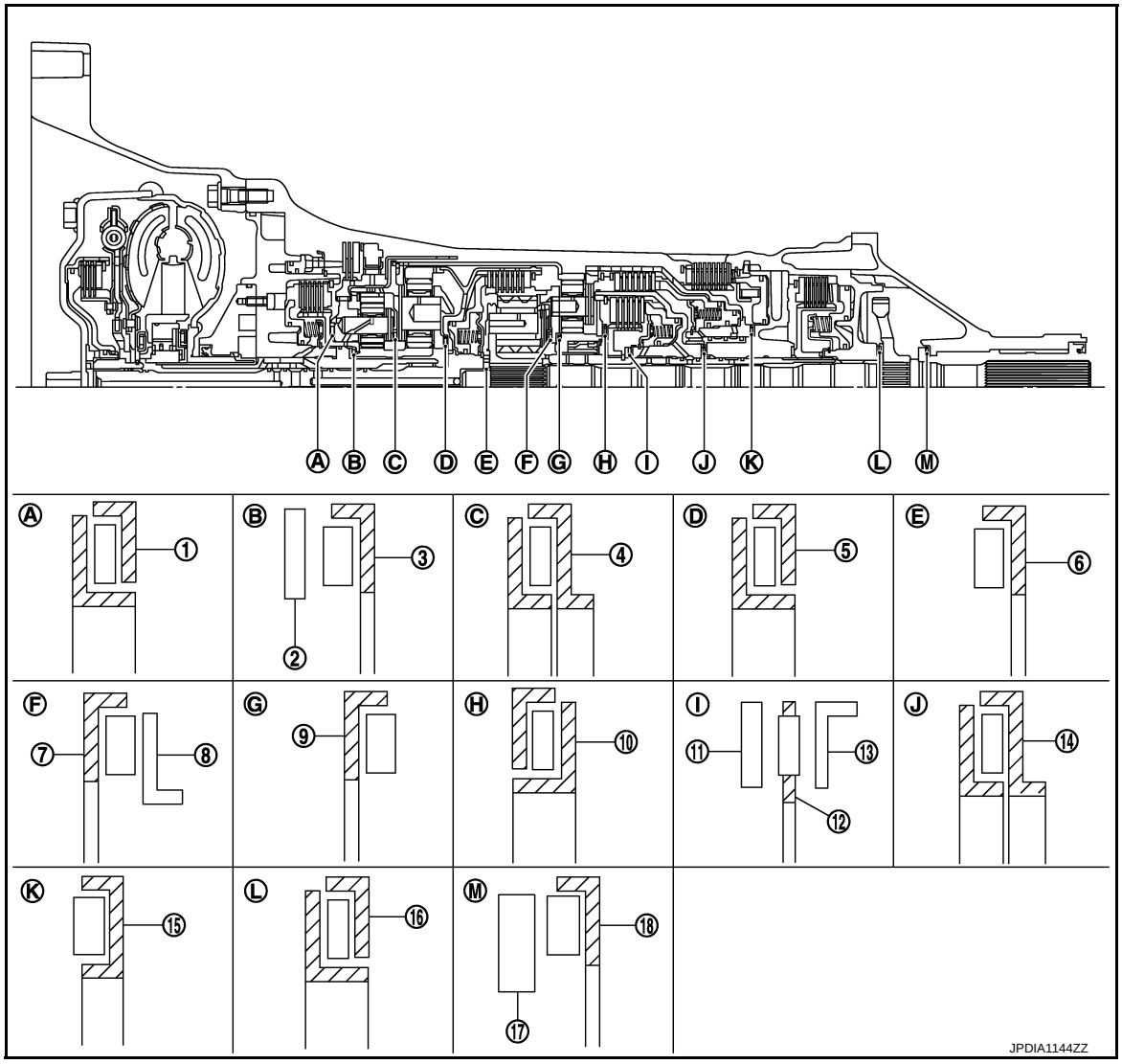

Location	Item	Outer diameter mm (in)
A	(1) Needle bearing	94 (3.701)
B	(2) Bearing race	58.6 (2.307)
	(3) Needle bearing	60 (2.362)
C	(4) Needle bearing	84.6 (3.331)
D	(5) Needle bearing	77 (3.031)
E	(6) Needle bearing	47 (1.850)
F	(7) Needle bearing	84 (3.307)
	(8) Bearing race	82 (3.228)
G	(9) Needle bearing	80 (3.150)
H	(10) Needle bearing	92 (3.622)
I	(11) Bearing race	61.1 (2.406)
	(12) Needle bearing	60 (2.362)
	(13) Bearing race	61.9 (2.437)
J	(14) Needle bearing	62.8 (2.472)
K	(15) Needle bearing	92 (3.622)
L	(16) Needle bearing	65 (2.559)

Location	Item	Outer diameter mm (in)
M	(17) Bearing race	58 (2.283)
	(18) Needle bearing	60 (2.362)

AWD MODELS

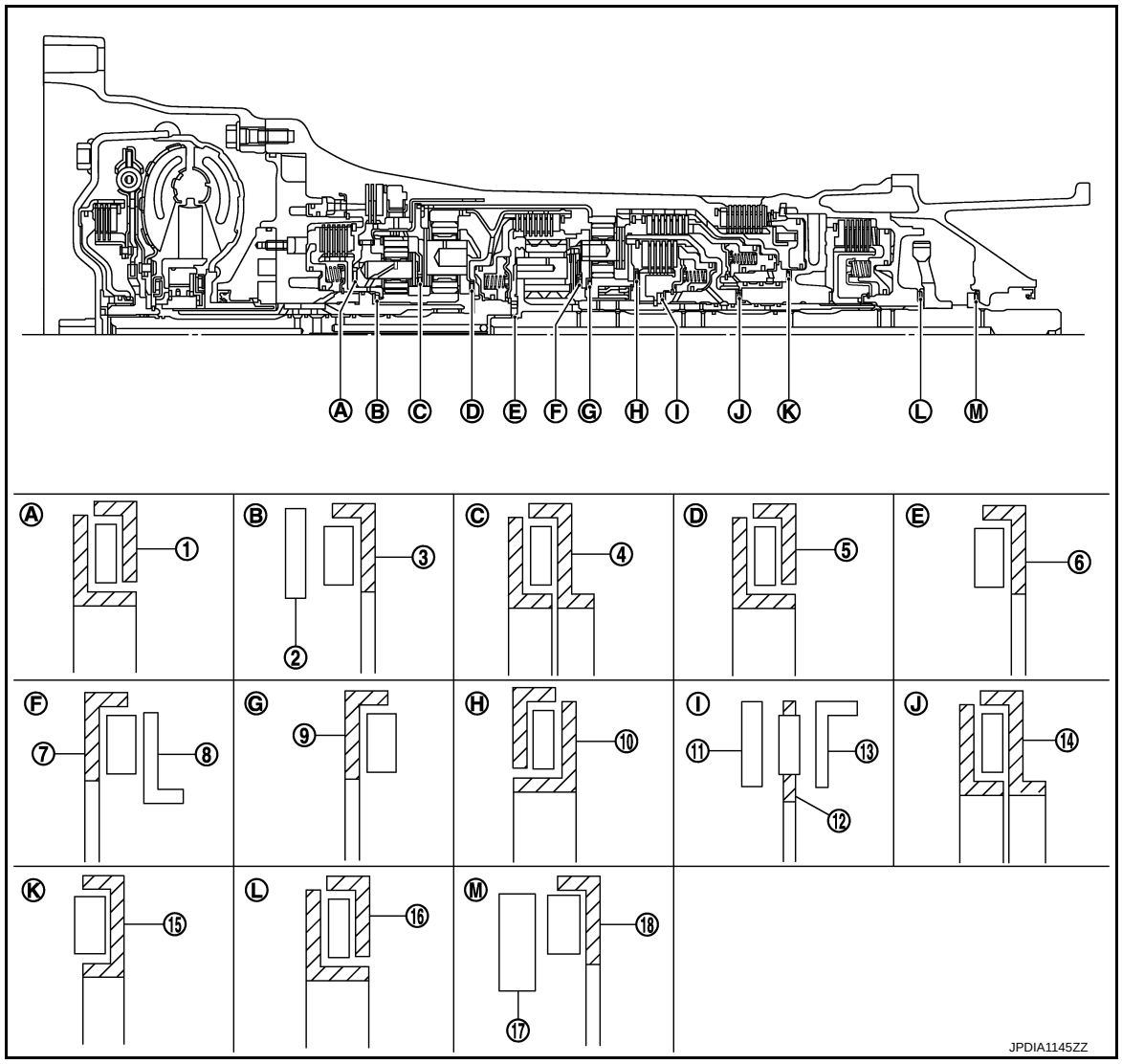

Location	Item	Outer diameter mm (in)
A	(1) Needle bearing	94 (3.701)
B	(2) Bearing race	58.6 (2.307)
	(3) Needle bearing	60 (2.362)
C	(4) Needle bearing	84.6 (3.331)
D	(5) Needle bearing	77 (3.031)
E	(6) Needle bearing	47 (1.850)
F	(7) Needle bearing	84 (3.307)
	(8) Bearing race	82 (3.228)
G	(9) Needle bearing	80 (3.150)
H	(10) Needle bearing	92 (3.622)

Location	Item	Outer diameter mm (in)
I	(11) Bearing race	61.1 (2.406)
	(12) Needle bearing	60 (2.362)
	(13) Bearing race	61.9 (2.437)
J	(14) Needle bearing	62.8 (2.472)
K	(15) Needle bearing	92 (3.622)
L	(16) Needle bearing	65 (2.559)
M	(17) Bearing race	58 (2.283)
	(18) Needle bearing	60 (2.362)

Location of Snap Rings

INFOID:0000000006365107

2WD MODELS

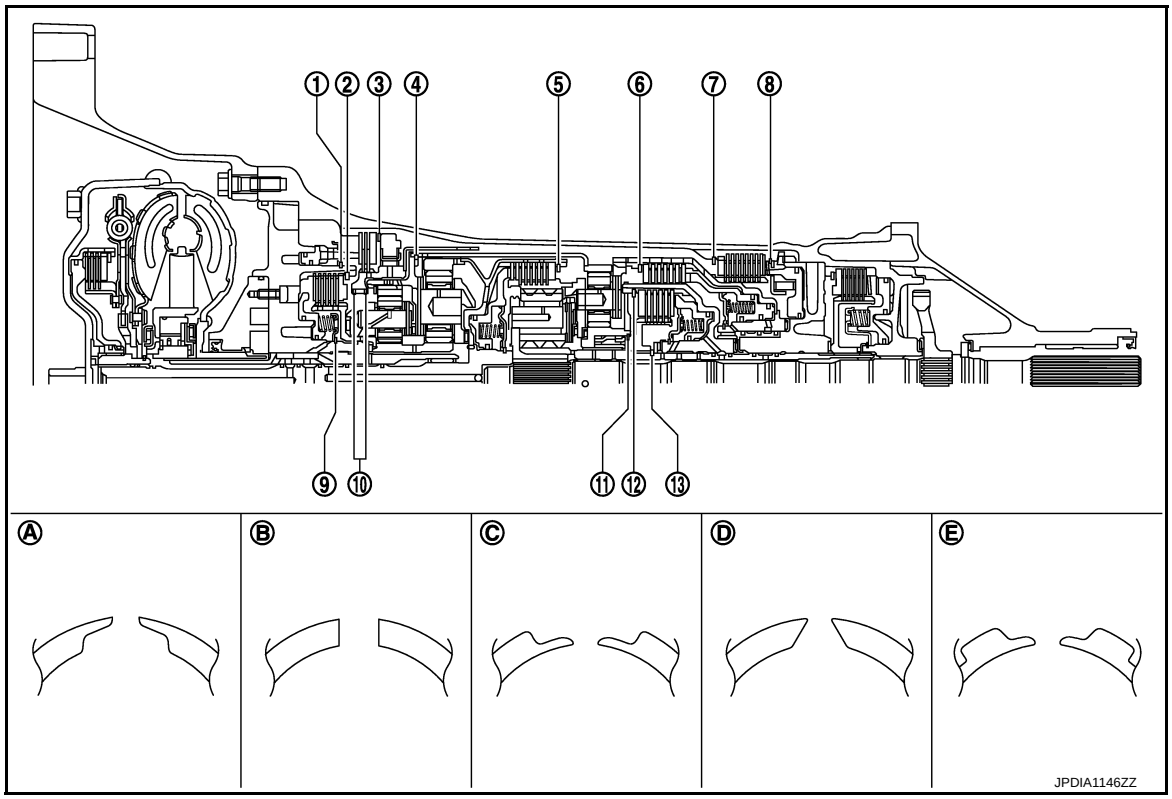

Location	Shape of snap ring	Outer diameter mm (in)
1	A	159.9 (6.295)
2	B	159 (6.260)
3	B	216 (8.504)
4	B	180.4 (7.102)
5	C	171.5 (6.752)
6	B	169 (6.654)
7	B	180.5 (7.106)
8	B	181.0 (7.126)
9	D	64.6 (2.543)
10	B	136 (5.354)
11	E	70.5 (2.776)

Location	Shape of snap ring	Outer diameter mm (in)
12	B	135 (5.315)
13	A	48.4 (1.906)

AWD MODELS

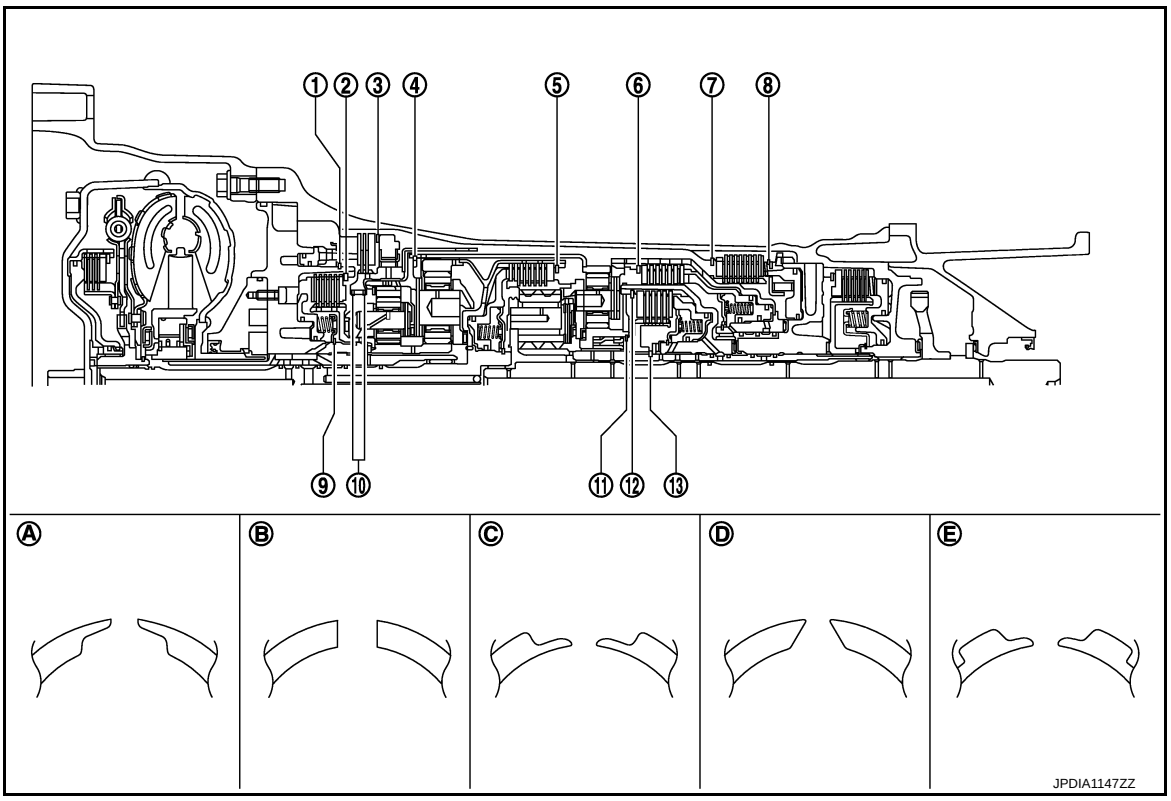

Location	Shape of snap ring	Outer diameter mm (in)
1	A	159.9 (6.295)
2	B	159 (6.260)
3	B	216 (8.504)
4	B	180.4 (7.102)
5	C	171.5 (6.752)
6	B	169 (6.654)
7	B	180.5 (7.106)
8	B	181.0 (7.126)
9	D	64.6 (2.543)
10	B	136 (5.354)
11	E	70.5 (2.776)
12	B	135 (5.315)
13	A	48.4 (1.906)

Disassembly

INFOID:0000000006365108

CAUTION:

Never disassemble parts behind drum support. Refer to TM-122, "Cross-Sectional View".

1. Drain ATF through drain plug.

2. Remove torque converter by holding it firmly and turning while pulling straight out.

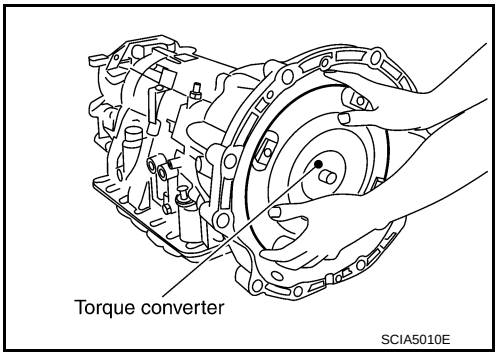

3. Remove tightening bolts (⬅) for converter housing and transmission case.
4. Remove converter housing from transmission case.
CAUTION:
Be careful not to scratch converter housing.

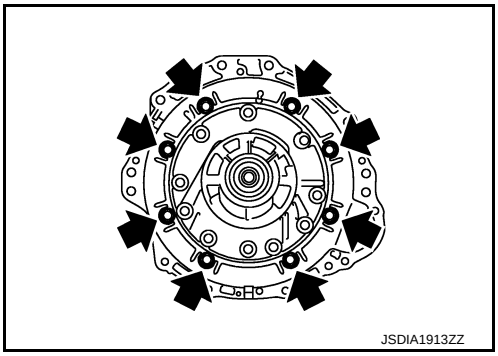

5. Remove O-ring from input clutch assembly.

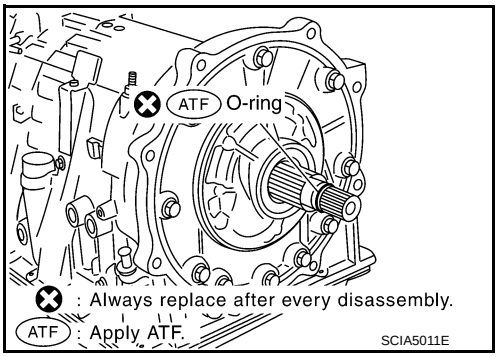

6. Remove tightening bolts (⬅) for oil pump assembly and transmission case.

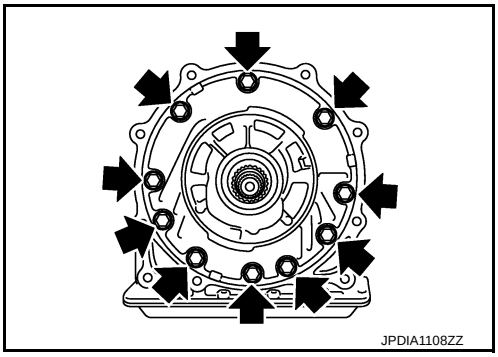

7. Attach the sliding hammers [SST: ST25850000 (J-25721-A)] (A) to oil pump assembly (1) and extract it evenly from transmission case.

B : Sliding hammer attachment position

CAUTION:
- **Fully tighten the sliding hammer screws.**
- **Make sure that bearing race is installed to the oil pump assembly edge surface.**

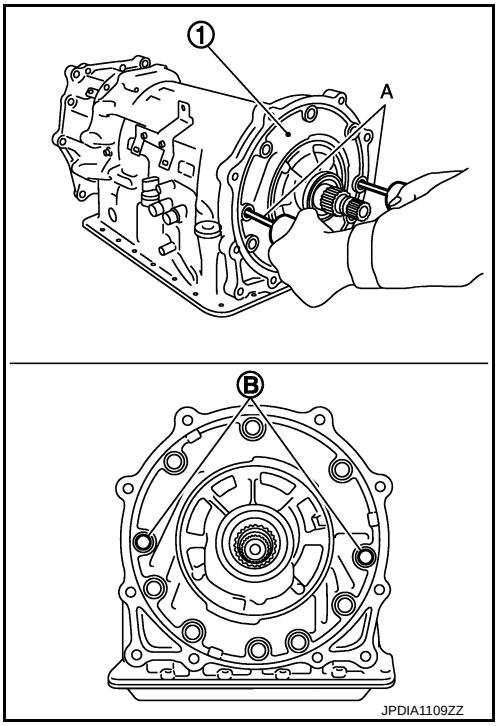

8. Remove O-ring (1) from oil pump assembly.

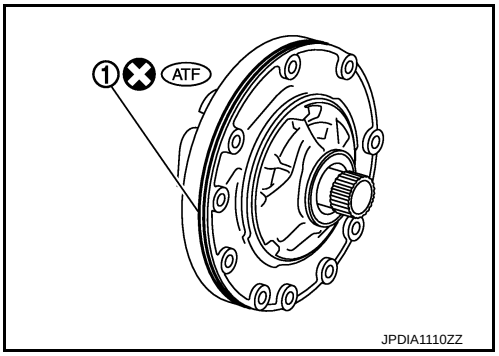

9. Remove bearing race (1) from oil pump assembly.

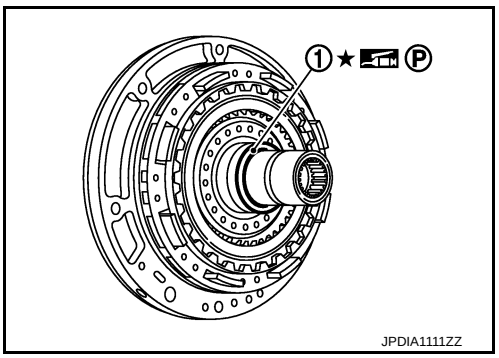

10. Remove seal ring (1) from oil pump assembly.

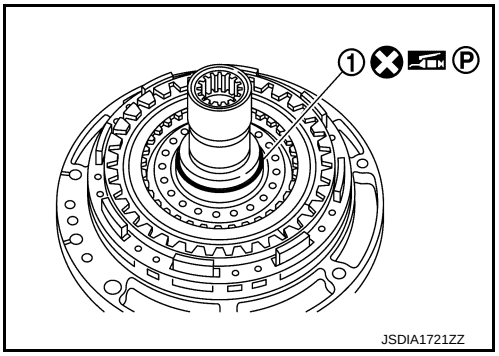

11. Remove under drive sun gear (1) from under drive carrier assembly.

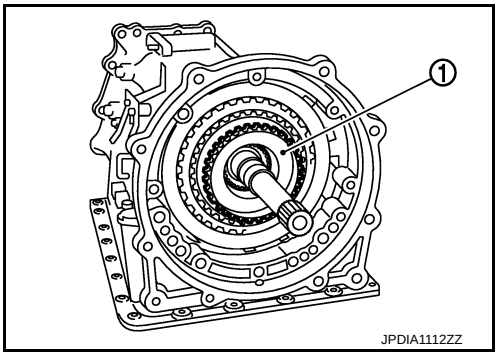

12. Remove needle bearing (1) from under drive sun gear.

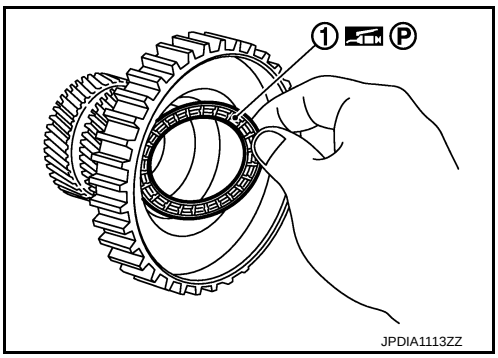

13. Remove needle bearing (1) from under drive carrier assembly.

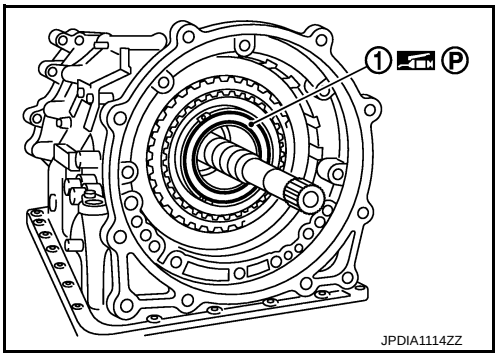

14. Remove front brake component part (retaining plates, drive plates and driven plate) from transmission case by using a wire (A) with its tip bent like a hook.

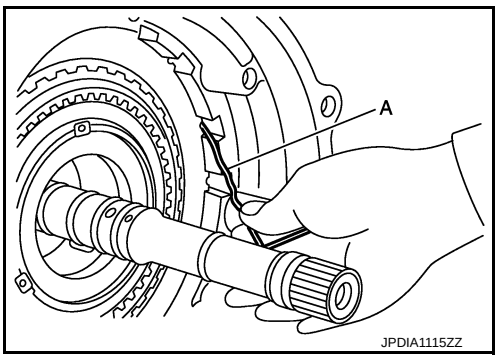

15. Remove snap ring (1) from transmission case using a flat-bladed screwdriver.
CAUTION:
- **Be careful not to scratch transmission case and 1st one-way clutch.**
- **Be careful not to damage snap ring.**

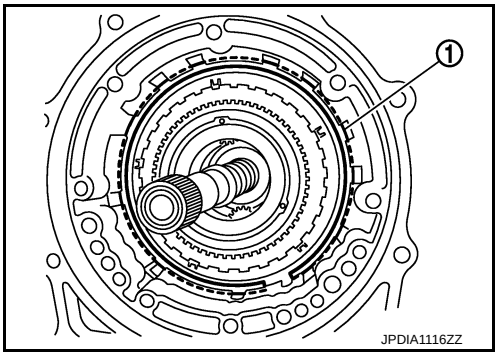

16. Remove input clutch assembly (with 1st one-way clutch, under drive carrier assembly, front brake hub, front carrier assembly, and rear internal gear) (1) from transmission case.

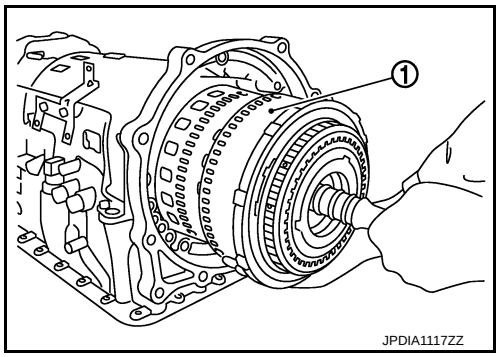

17. Remove 1st one-way clutch (1) from front brake hub.

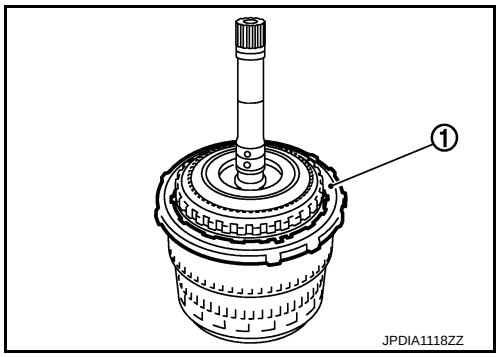

18. Remove under drive carrier assembly (with front brake hub) (1) from front carrier assembly.

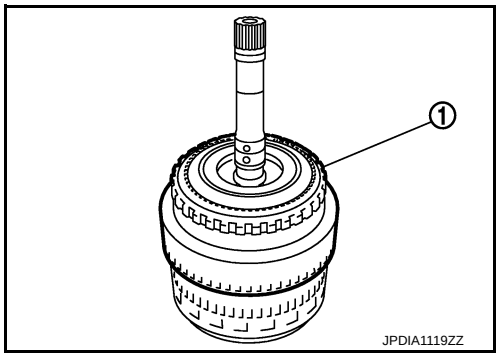

19. Remove needle bearing (1) from front carrier assembly.

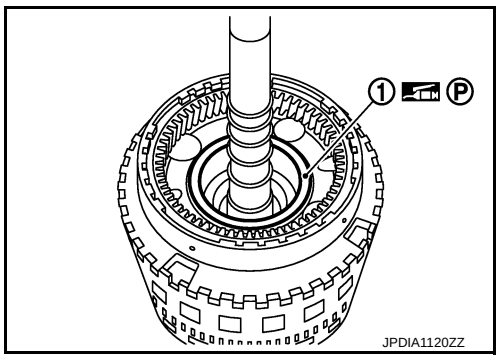

20. Remove seal rings (1) from input clutch assembly.

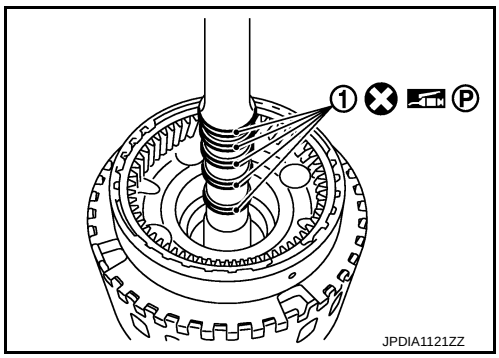

21. Remove mid carrier assembly and rear carrier assembly as a unit.

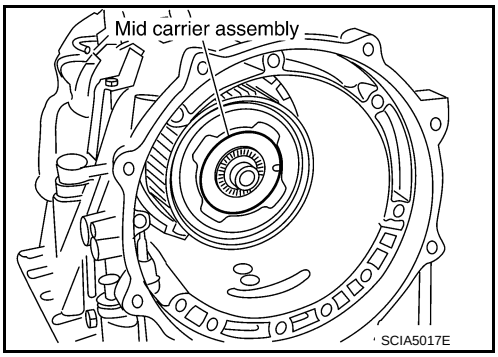

22. Remove mid carrier assembly from rear carrier assembly.

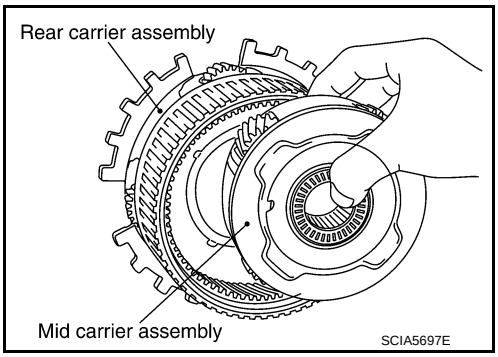

23. Remove needle bearing (front side) from mid carrier assembly.

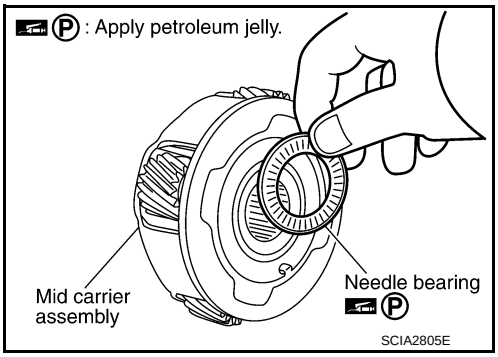

24. Remove needle bearing (rear side) from mid carrier assembly.

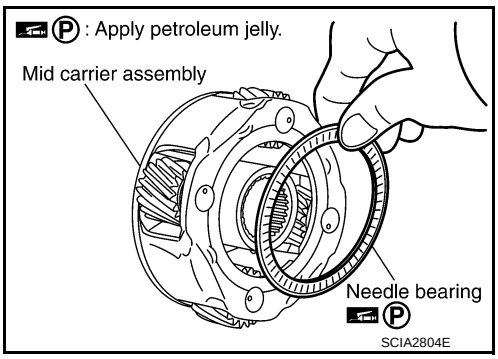

25. Remove bearing race from rear carrier assembly.

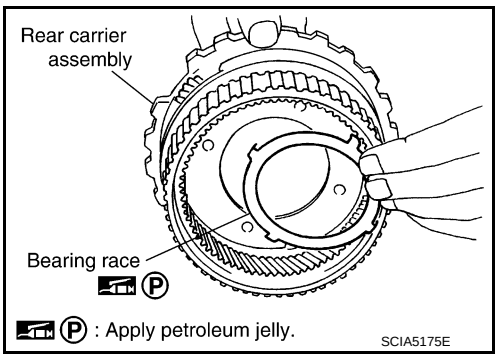

26. Remove needle bearing from rear carrier assembly.

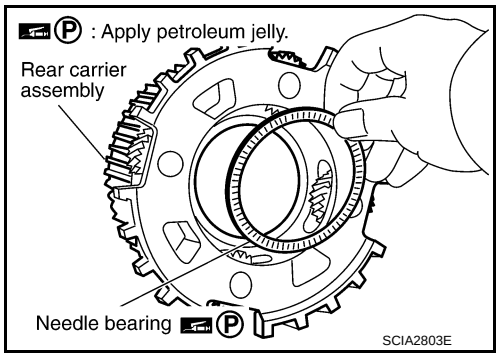

27. Remove mid sun gear assembly, rear sun gear assembly, and high and low reverse clutch hub as a unit.
CAUTION:
Be careful to remove then with bearing race and needle bearing.

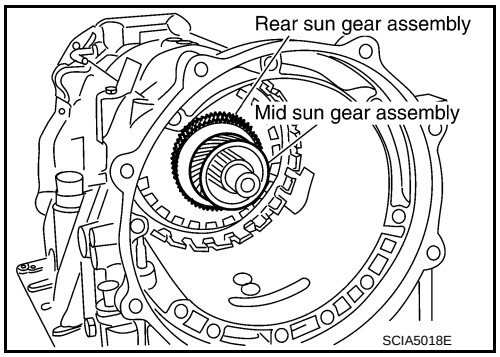

28. Remove high and low reverse clutch assembly from direct clutch assembly.
CAUTION:
Make sure that needle bearing is installed to the high and low reverse clutch assembly edge surface.

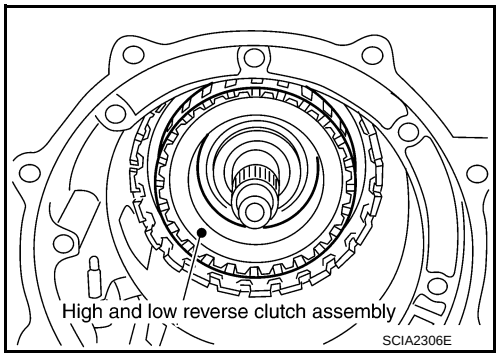

29. Remove direct clutch assembly from reverse brake.

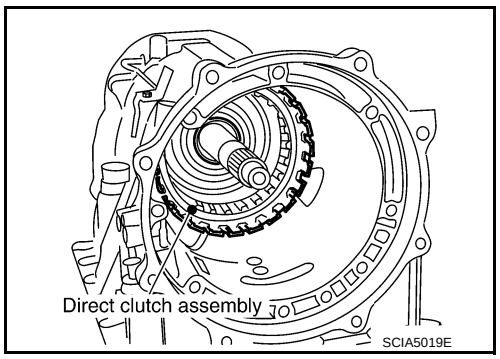

30. Remove needle bearing from drum support.

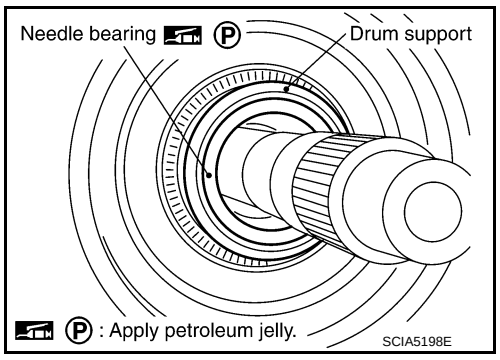

31. Remove snap ring (1) from joint connector (A).

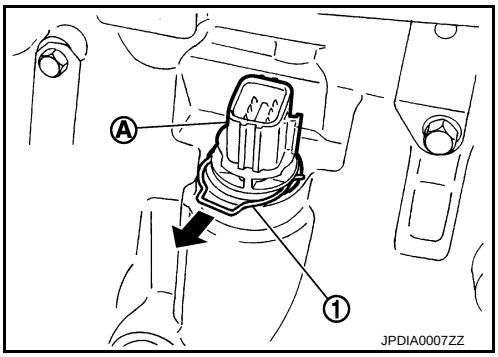

32. Push joint connector (A).
CAUTION:
Be careful not to damage connector.

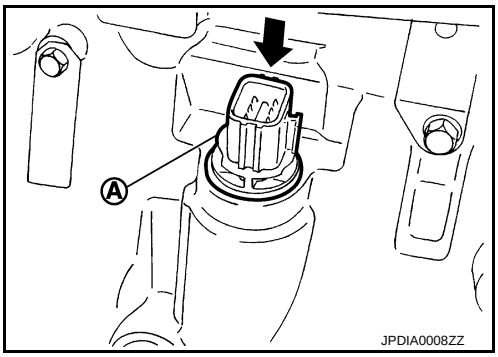

33. Remove oil pan mounting bolts (⬅).

1 : Clip
⇦ : Front

34. Remove oil pan (2) and oil pan gasket.

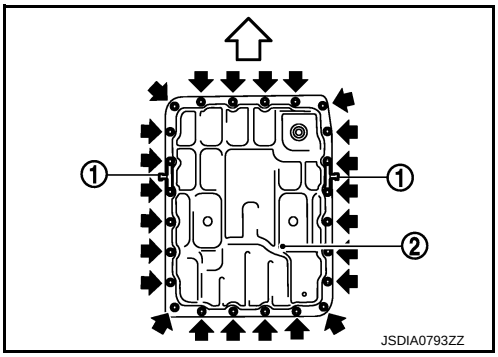

35. Remove magnets (1) from oil pan.

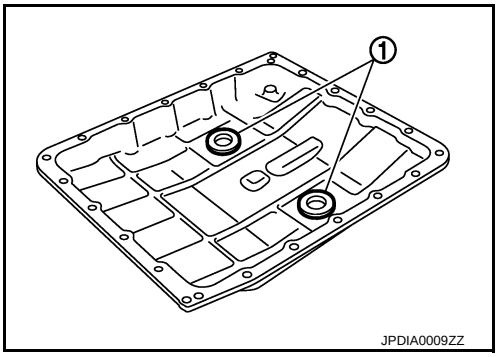

36. Disconnect output speed sensor connector (A).
CAUTION:
Be careful not to damage connector.
37. Disengage terminal clips (⬅).

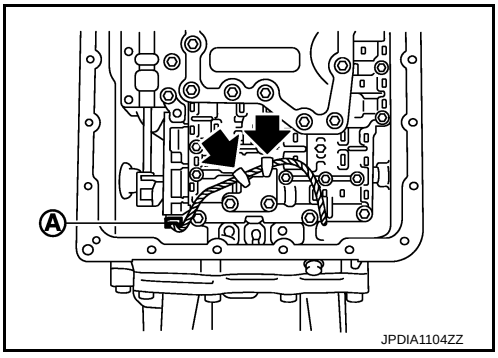

38. Remove control valve & TCM mounting bolts and clip (1) from the control valve & TCM.

⇦ : Front

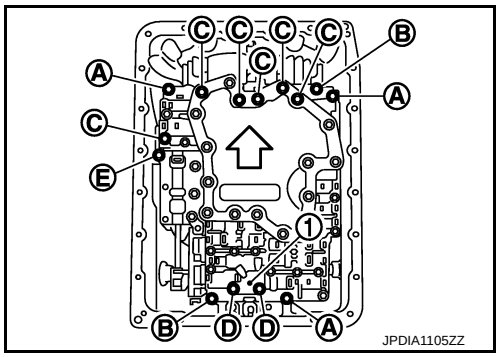

JPDIA1105ZZ

Bolt symbol	Length mm (in)	Number of bolts
A	43 (1.69)	3
B	40 (1.57)	2
C	54 (2.13)	6
D	50 (1.97)	2
E*	50 (1.97)	1

*: Reamer bolt

39. Remove the control valve & TCM (1) from transmission case.
CAUTION:
When removing, never with the manual valve notch and manual plate height. Remove it vertically.

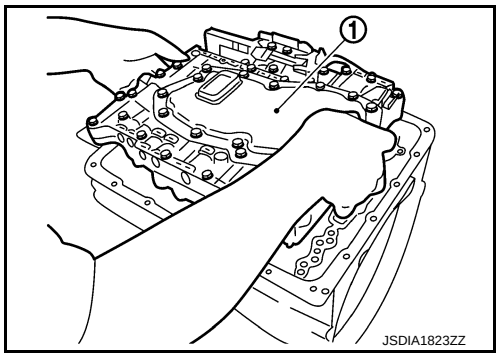

JSDIA1823ZZ

40. Remove joint connector (1) from the control valve & TCM using a flat-bladed screwdriver (A).

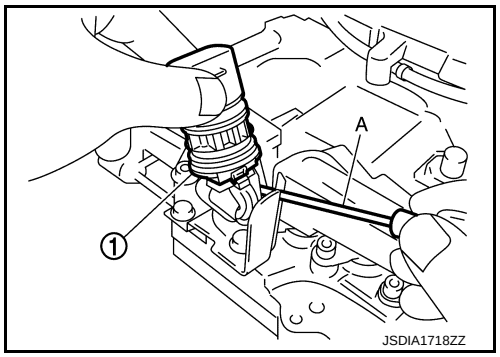

JSDIA1718ZZ

41. Disconnect TCM connector (A).
CAUTION:
Be careful not to damage connector.

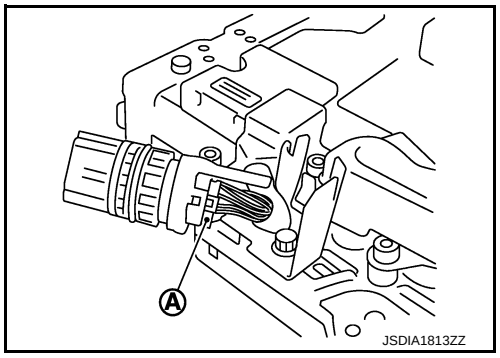

JSDIA1813ZZ

42. Remove rear extension assembly (2WD) or adapter case assembly (AWD) according to the following procedures.

a. **2WD**

i. Remove tightening bolts for rear extension assembly and transmission case.

A : Bolt
B : Self-sealing bolt

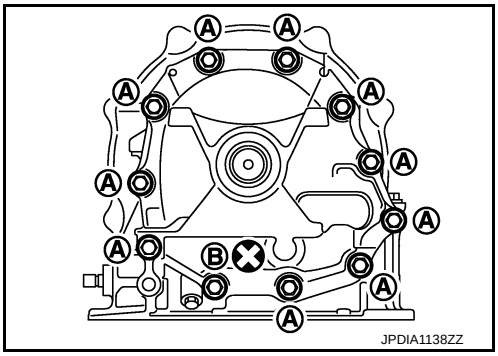

ii. Tap rear extension assembly using a soft hammer.
CAUTION:
Be careful not to damage adapter case.

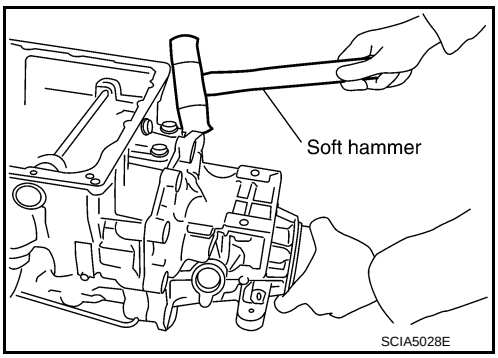

iii. Remove rear extension assembly from transmission case. (With needle bearing.)

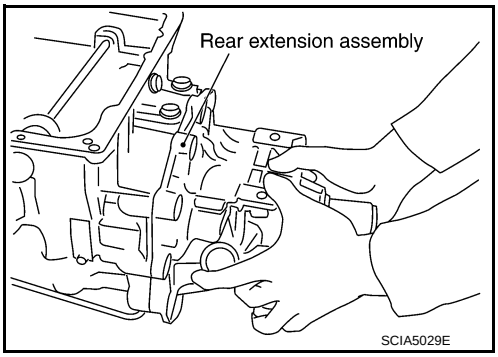

iv. Remove bearing race from output shaft.

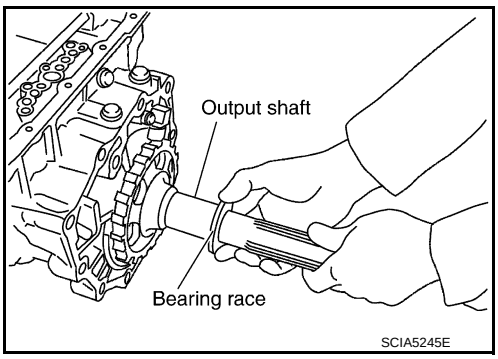

v. Remove output shaft from transmission case by rotating left/right.

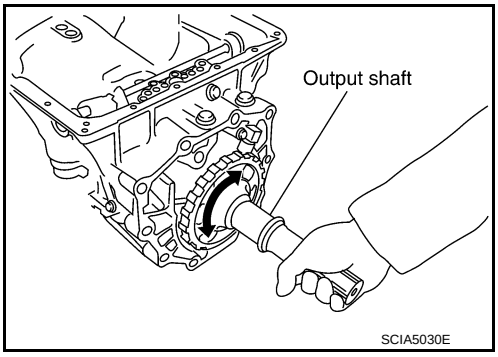

vi. Remove parking gear (1) from output shaft (2).

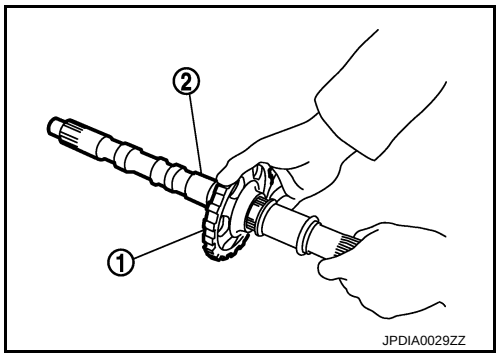

vii. Remove seal rings (1) from output shaft.

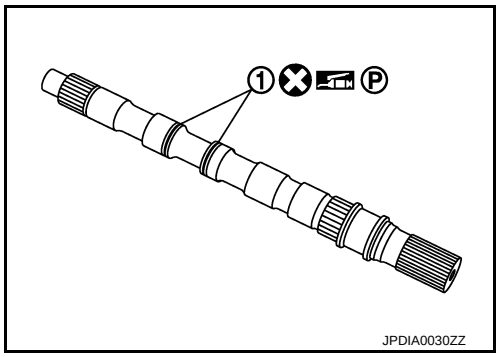

b. **AWD**

i. Remove tightening bolts for adapter case assembly and transmission case.

1 : Bracket
A : Bolt
B : Self-sealing bolt

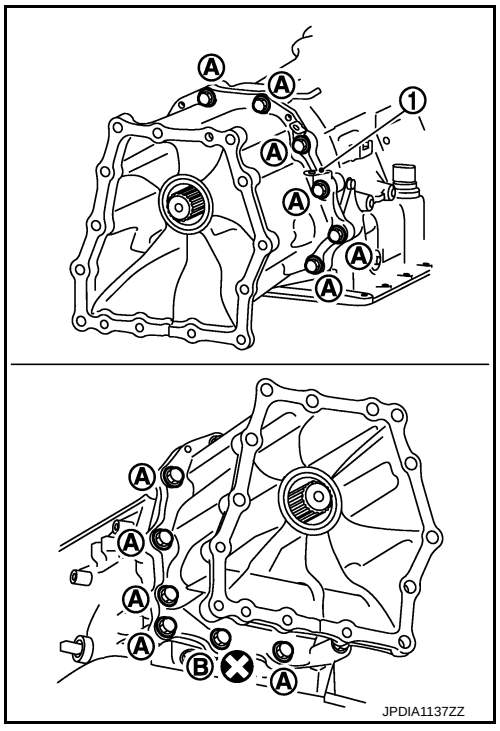

ii. Tap adapter case assembly using a soft hammer.
CAUTION:
Be careful not to damage adapter case.

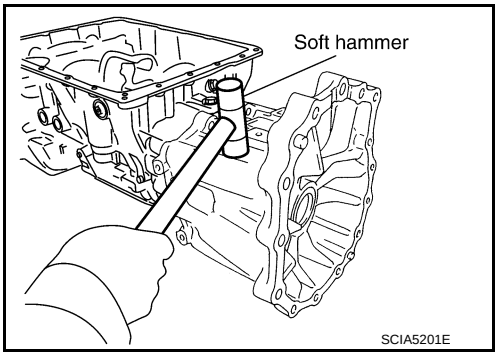

iii. Remove adapter case assembly from transmission case. (With needle bearing)

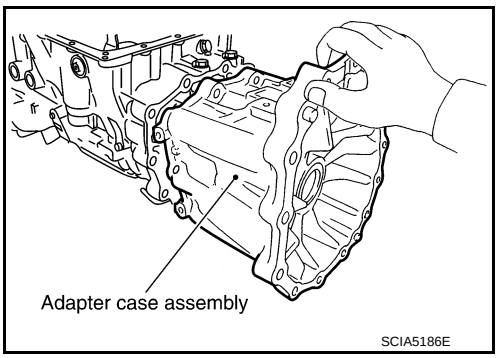

iv. Remove bearing race from output shaft.

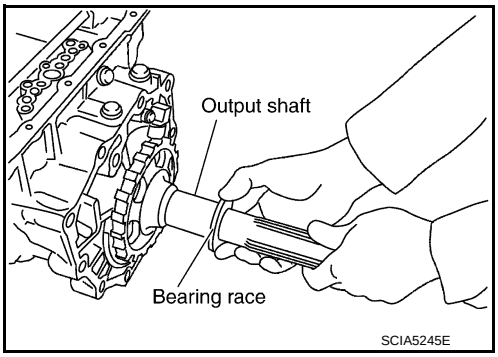

v. Remove output shaft from transmission case by rotating left/ right.

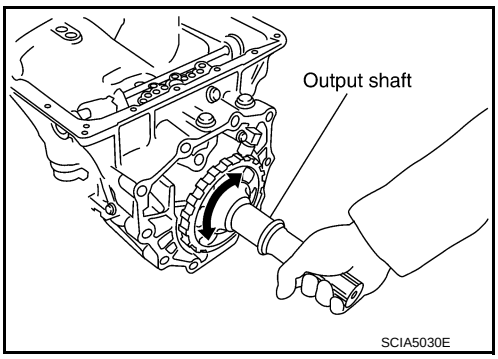

vi. Remove gasket from transmission case.

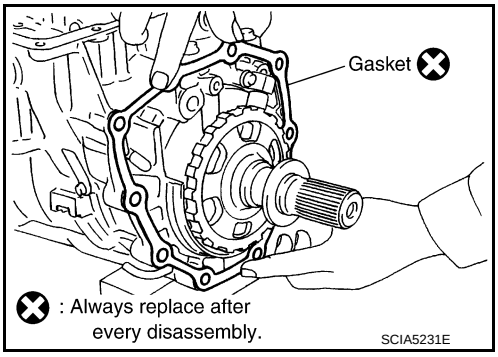

vii. Remove parking gear (1) from output shaft (2).

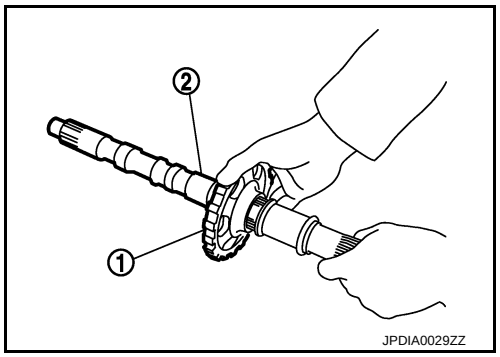

viii. Remove seal rings (1) from output shaft.

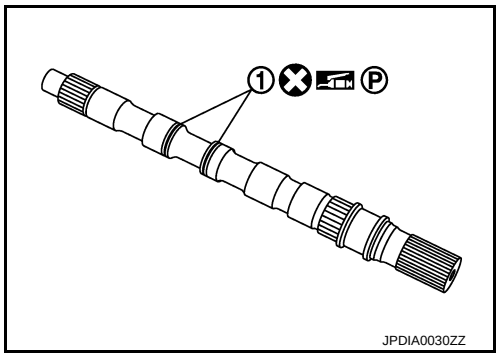

43. Remove needle bearing from transmission case.

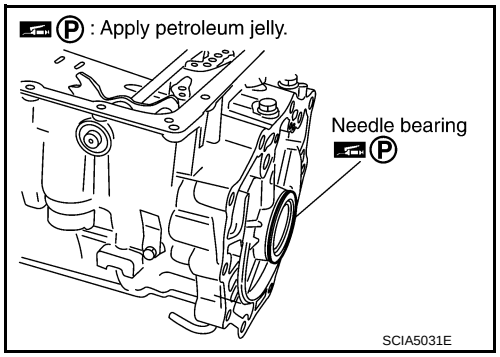

44. Remove output speed sensor (1) from transmission case.

⬅ : Bolt

CAUTION:
- **Never subject it to impact by dropping or hitting it.**
- **Never disassemble.**
- **Never allow metal filings, etc. to get on the sensor's front edge magnetic area.**
- **Never place in an area affected by magnetism.**

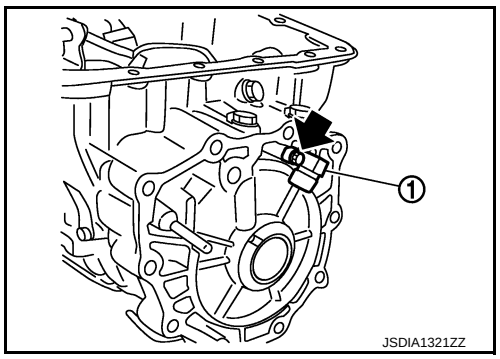

45. Remove reverse brake snap ring (fixing plate) with 2 flat-bladed screwdrivers.

CAUTION:
- **Be careful not to scratch transmission case and reverse brake retaining plate.**
- **Be careful not to damage snap ring.**

NOTE:
Press out snap ring from the transmission case oil pan side gap with a flat-bladed screwdriver, and remove it using a another screwdriver.

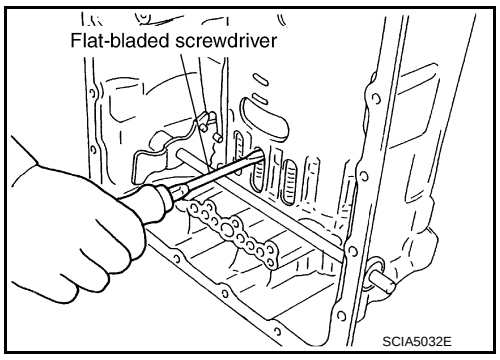

46. Remove reverse brake retaining plate from transmission case.

47. Remove N-spring from transmission case.

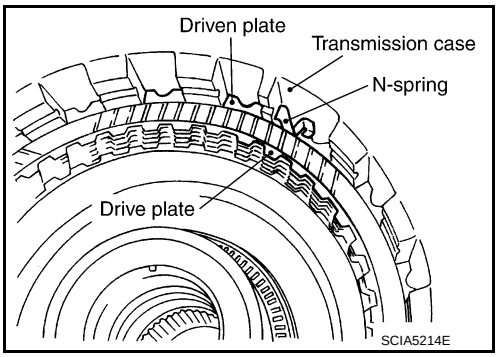

48. Remove reverse brake component part (drive plates, driven plates and dish plates) from transmission case.

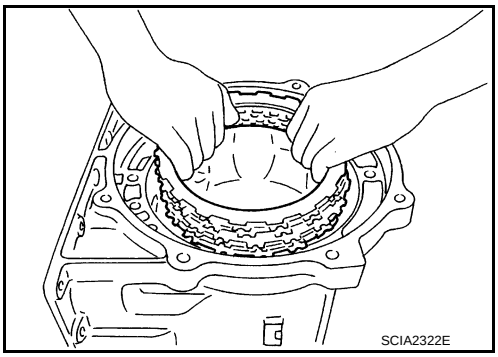

49. Remove snap ring (fixing spring retainer) using a flat-bladed screwdriver.
CAUTION:
- **Be careful not to scratch transmission case and spring retainer.**
- **Be careful not to damage snap ring.**

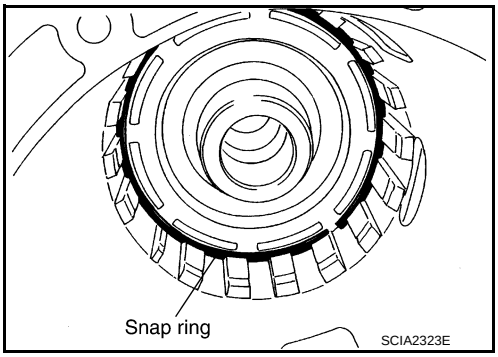

50. Remove reverse brake spring retainer and reverse brake return spring from transmission case.

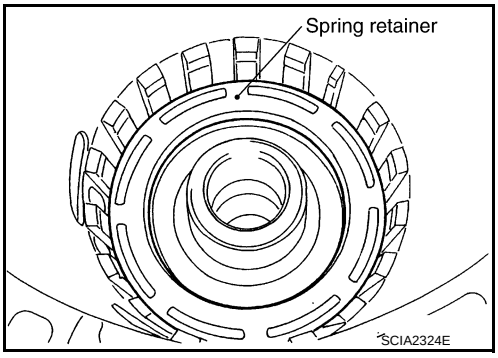

51. Remove seal rings from drum support.

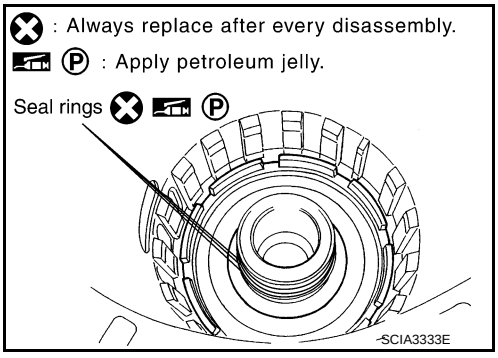

52. Remove needle bearing from drum support edge surface.

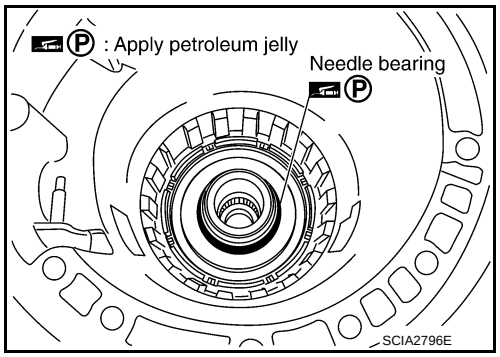

53. Remove reverse brake piston (1) from transmission case with compressed air. Refer to TM-331, "Oil Channel".

A : Reverse brake pressure hole

CAUTION:
Care should be taken not to abruptly blow air. It makes pistons incline, as the result, it becomes hard to disassemble the pistons.

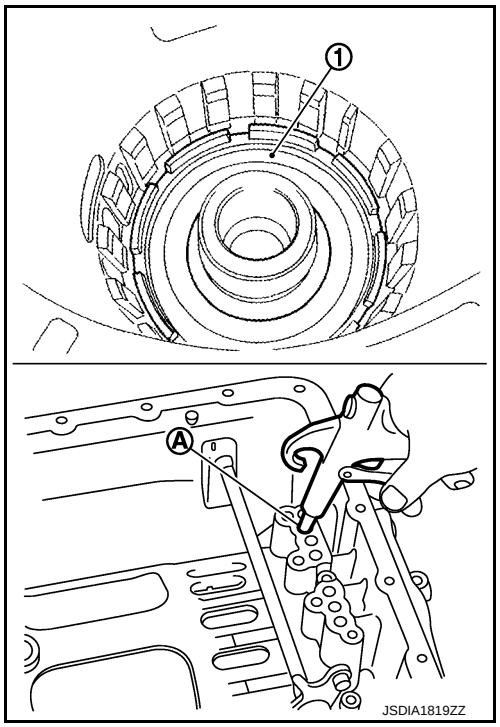

54. Remove D-rings from reverse brake piston.

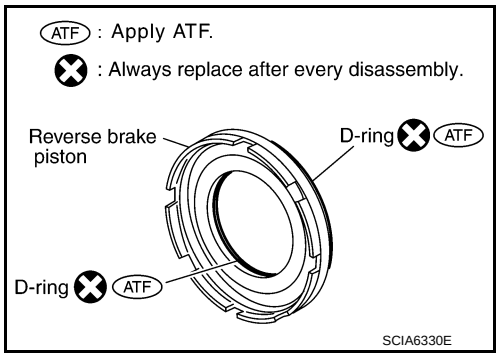

55. Remove manual shaft retaining pin with pair of nippers.
CAUTION:
Be careful not to cut retaining pin.

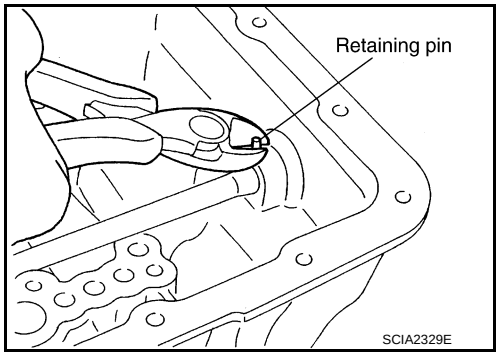

56. Remove manual plate (1) from detent spring (2).
57. Remove parking rod (3) from manual plate.
58. Install manual plate to detent spring.

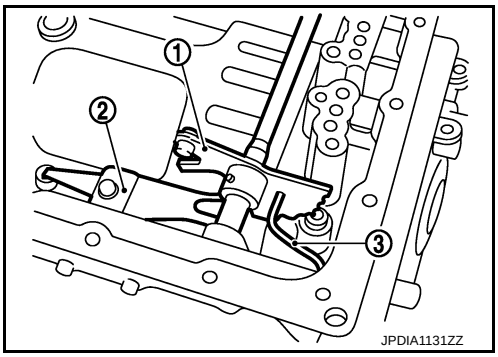

59. Use a pin punch [4 mm (0.16 in) dia. commercial service tool] to knock out retaining pin (1).

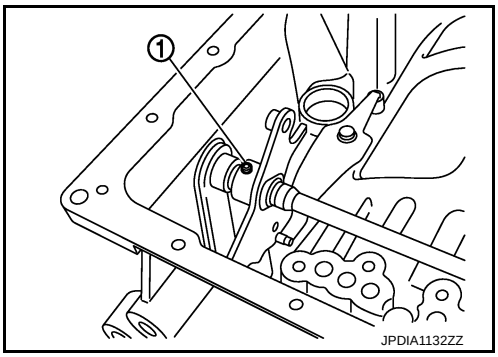

60. Remove manual plate from manual shaft.

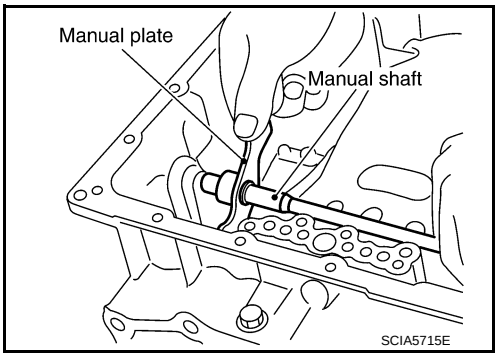

61. Remove manual shaft from transmission case.

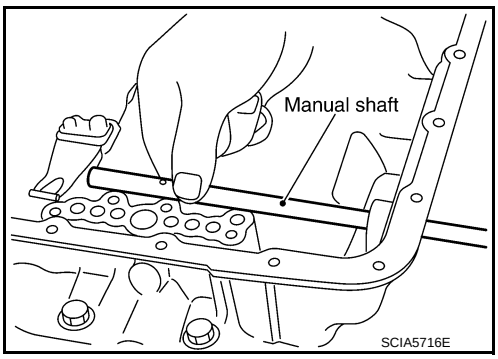

62. Remove manual shaft oil seals using a flat-bladed screwdriver.
CAUTION:
Be careful not to scratch transmission case.

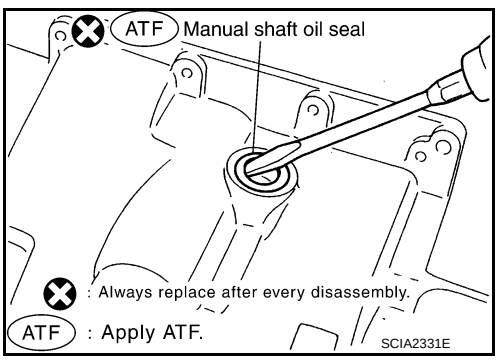

63. Remove detent spring (1) from transmission case.

⬅ : Bolt

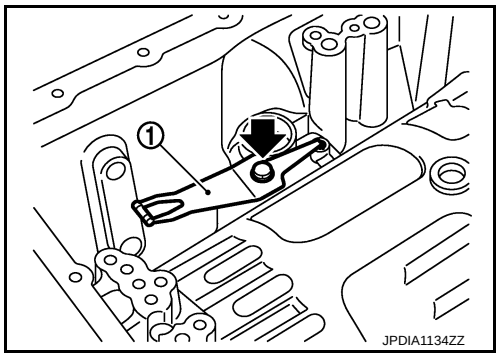

64. Remove needle bearing (1) from rear extension (2WD) or adapter case (AWD).

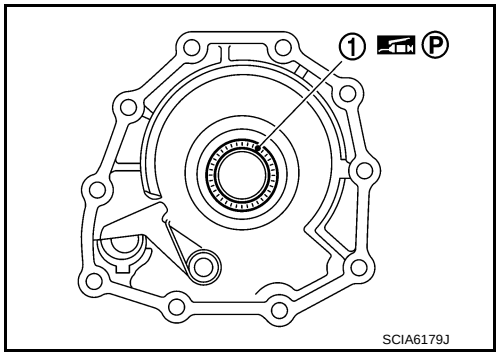

65. Remove parking actuator support from rear extension (2WD) or adapter case (AWD).

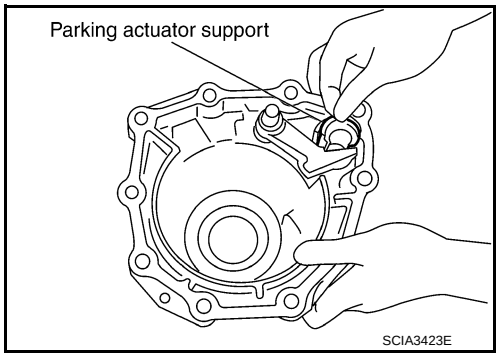

66. Remove parking pawl (with return spring) and pawl shaft from rear extension (2WD) or adapter case (AWD).

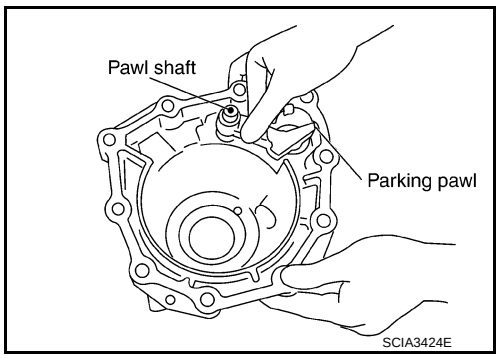

67. Remove return spring (1) from parking pawl (2).

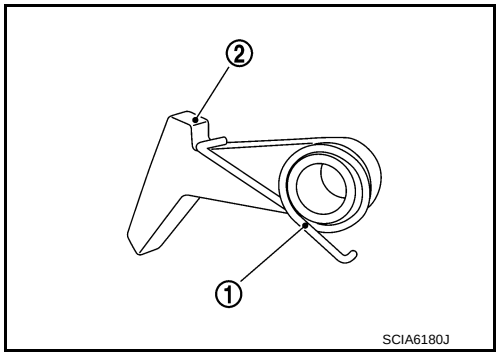

68. Remove rear oil seal from rear extension (B) or adapter case (C) using a flat-bladed screwdriver (A).

B : 2WD
C : AWD

CAUTION:
Be careful not to scratch rear extension (2WD) or adapter case (AWD).

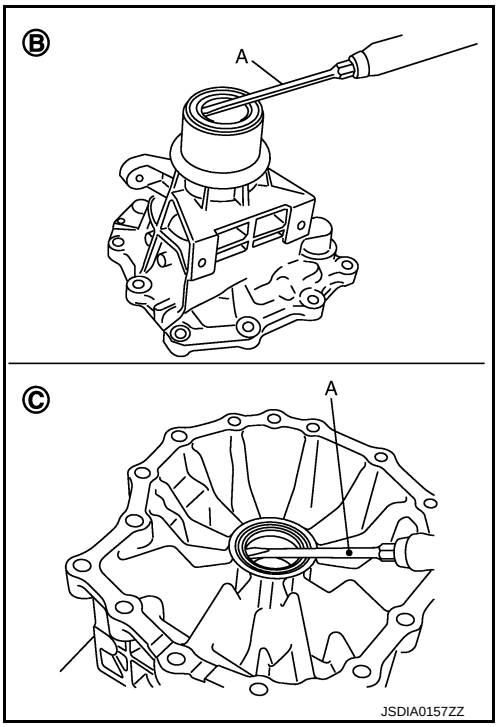

Assembly

INFOID:0000000006365109

1. As shown in the figure, use a drift [22 mm (0.87 in) dia. commercial service tool] to drive manual shaft oil seals into the transmission case until it is flush.

CAUTION:
- **Never reuse manual shaft oil seals.**
- **Apply ATF to manual shaft oil seals.**

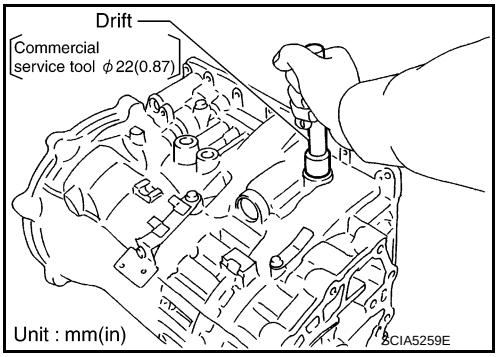

2. Install detent spring to transmission case. Tighten detent spring bolt to the specified torque.

⬅ : Bolt

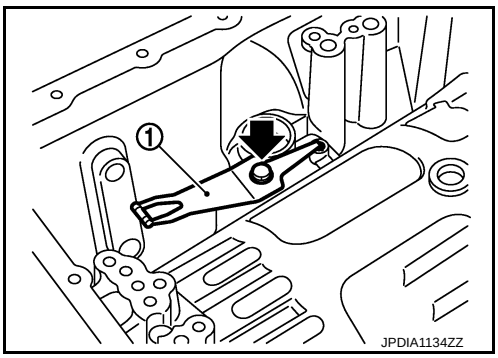

3. Install manual shaft to transmission case.

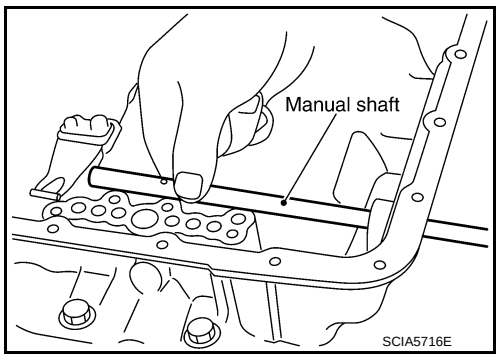

4. Install parking rod (1) to manual plate (2).

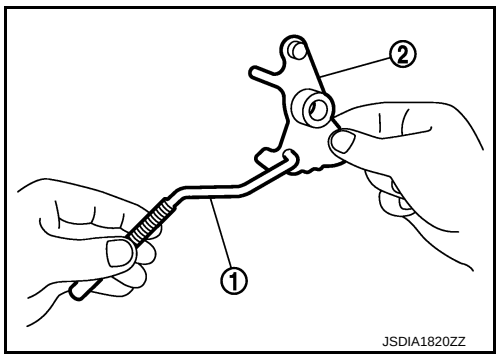

5. Install manual plate (with parking rod) to manual shaft.

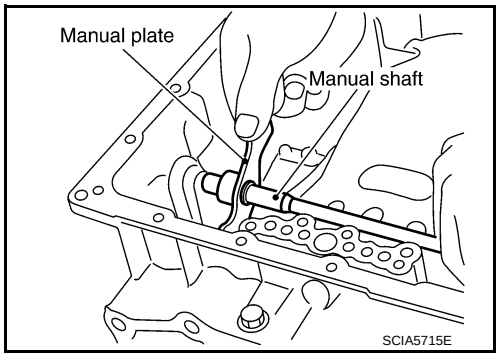

6. Install retaining pin (1) into the manual plate and manual shaft.
a. Fit pinhole of the manual plate to pinhole of the manual shaft with a pin punch.
b. Use a hammer to tap the retaining pin into the manual plate.

A : Approx. 2 mm (0.08in)

CAUTION:
Drive retaining pin to 2±0.5 mm (0.08±0.020 in) over the manual plate.

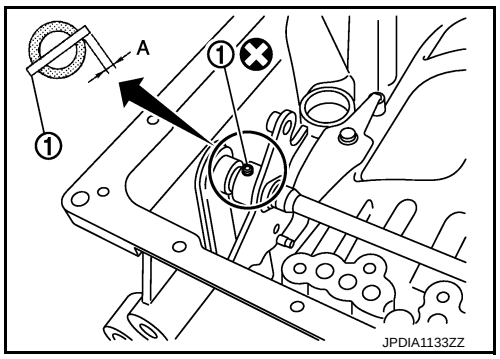

7. Install retaining pin into the transmission case and manual shaft.
a. Fit pinhole of the transmission case to pinhole of the manual shaft with a pin punch.
b. Use a hammer to tap the retaining pin into the transmission case.

CAUTION:
Drive retaining pin to 5±1 mm (0.20±0.04 in) over the transmission case.

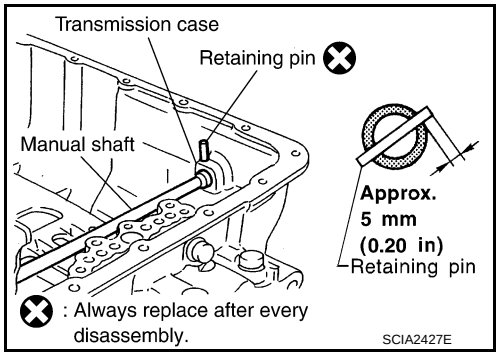

8. Install D-rings to reverse brake piston.

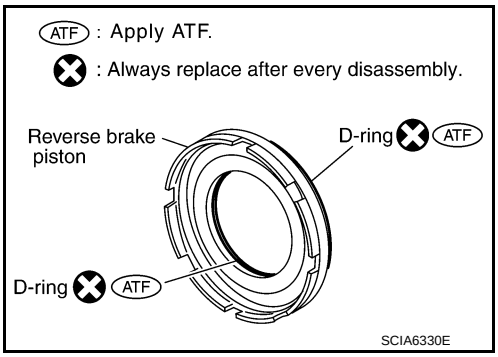

9. Install reverse brake piston to transmission case.

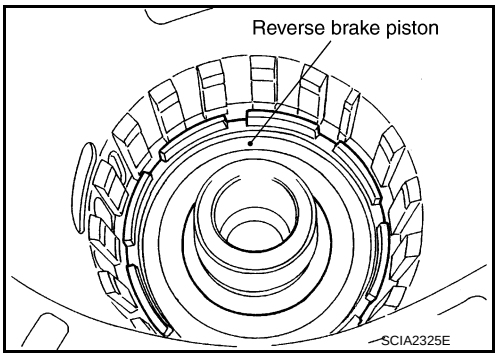

10. Install needle bearing to drum support edge surface.
CAUTION:
Check the direction of needle bearing. Refer to TM-331, "Location of Needle Bearings and Bearing Races".

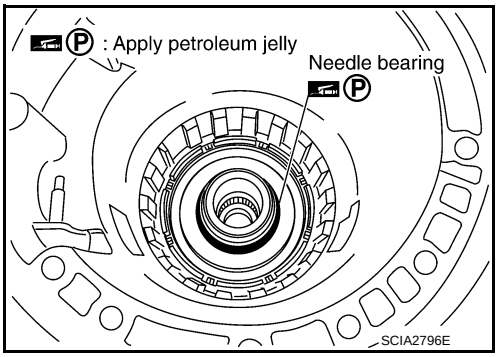

11. Install seal rings to drum support.

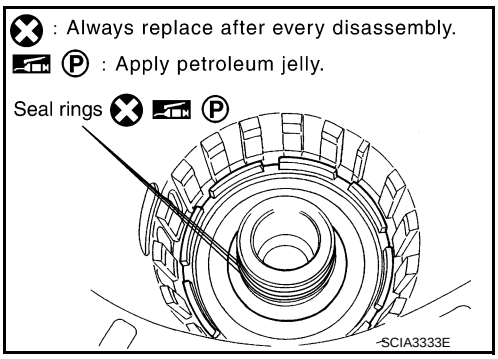

12. Install reverse brake spring retainer and reverse brake return spring in transmission case.

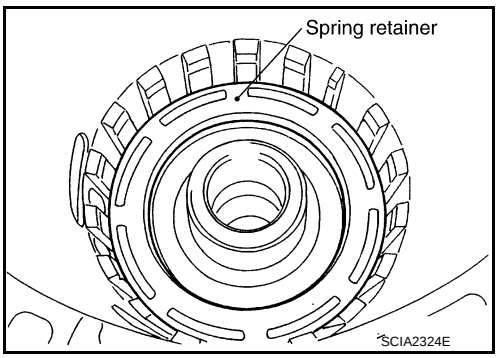

13. Set the clutch spring compressor on reverse brake spring retainer and install snap ring (fixing spring retainer) in transmission case while compressing return spring.

CAUTION:

- **Securely assemble them using a flat-bladed screwdriver so that snap ring tension is slightly weak.**
- **Be careful not to damage snap ring.**

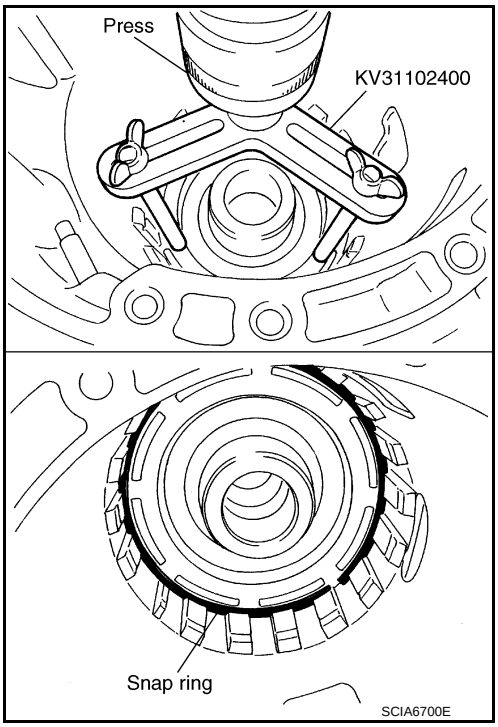

14. Install reverse brake component part (dish plates, driven plates and drive plates) to transmission case.

1 : Snap ring
2 : Retaining plate
3 : Drive plate (six pieces)
4 : Driven plate (six pieces)
5 : Dish plate
6 : Dish plate

CAUTION:
Check order of plates.

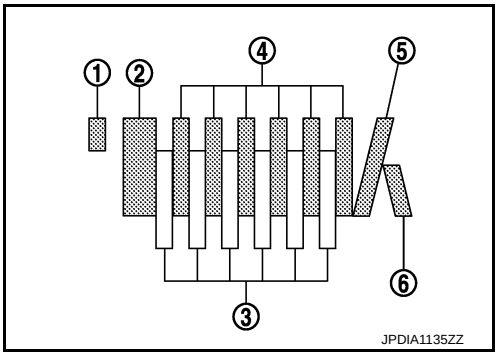

15. Assemble N-spring.
16. Install reverse brake retaining plate to transmission case.

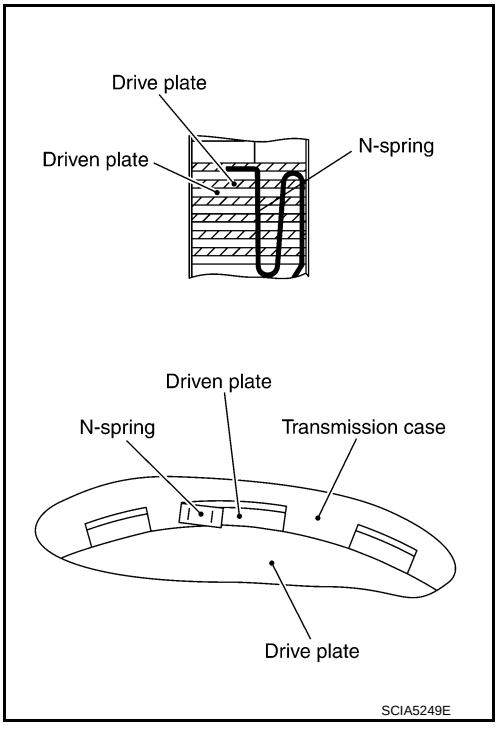

17. Install snap ring to transmission case.
CAUTION:
Be careful not to damage snap ring.

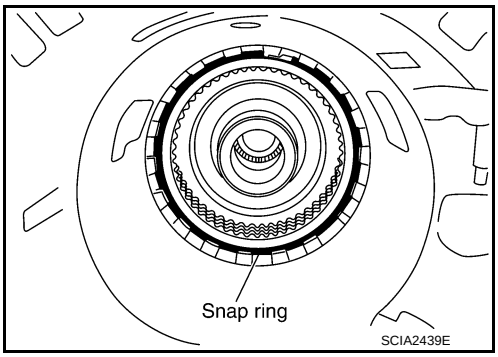

18. Measure clearance between reverse brake retaining plate and snap ring. If not within specified clearance, select proper retaining plate.

Specified reverse brake clearance "A"

Standard: Refer to TM-409, "Reverse Brake Clearance".

Retaining plate: Refer to TM-409, "Reverse Brake Clearance"

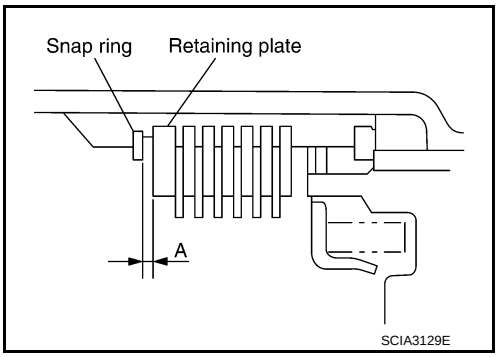

19. Install needle bearing to transmission case.
CAUTION:
Check the direction of needle bearing. Refer to TM-331, "Location of Needle Bearings and Bearing Races".

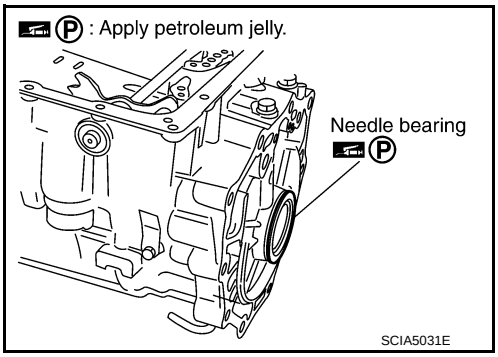

20. Install output speed sensor (1) to transmission case. Tighten revolution sensor bolt to the specified torque.

: Bolt

CAUTION:
- **Never subject it to impact by dropping or hitting it.**
- **Never disassemble.**
- **Never allow metal filings, etc. to get on the sensor's front edge magnetic area.**
- **Never place in an area affected by magnetism.**

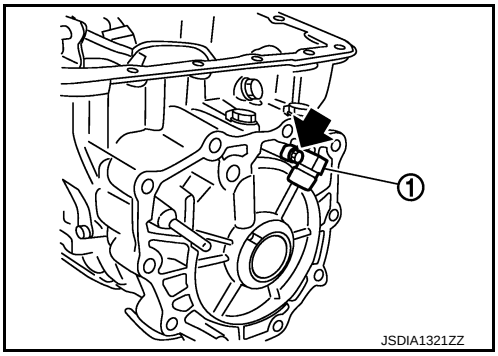

21. As shown in the figure, use the drift to drive rear oil seal into the rear extension (2WD) (A) or adapter case (AWD) (B) until it is flush.

    1 : Drift [SST: 33400001 (J-26082)]
    2 : Drift [Commercial service tool Ø64 mm (2.52 in)]

    CAUTION:
    - **Never reuse rear oil seal.**
    - **Apply ATF to rear oil seal.**

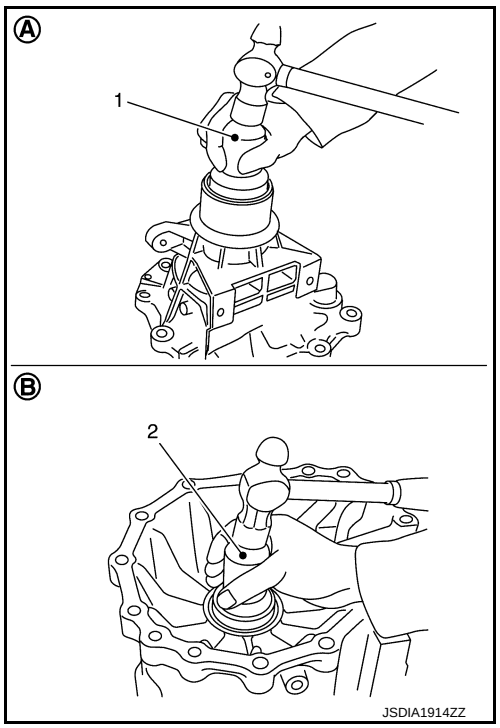

22. Install return spring (1) to parking pawl (2).

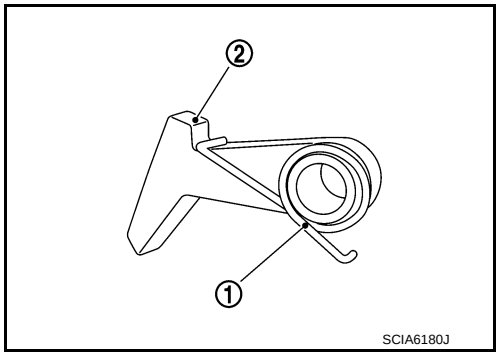

23. Install parking pawl (with return spring) and pawl shaft to rear extension (2WD) or adapter case (AWD).

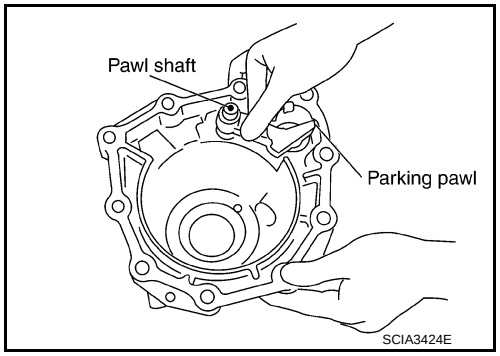

24. Install parking actuator support to rear extension (2WD) or adapter case (AWD).

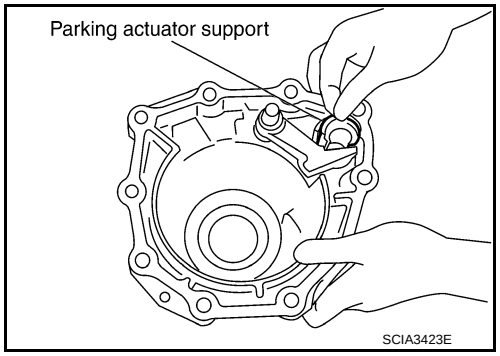

25. Install needle bearing (1) to rear extension (2WD) or adapter case (AWD).
CAUTION:
Check the direction of needle bearing. Refer to TM-331, "Location of Needle Bearings and Bearing Races".

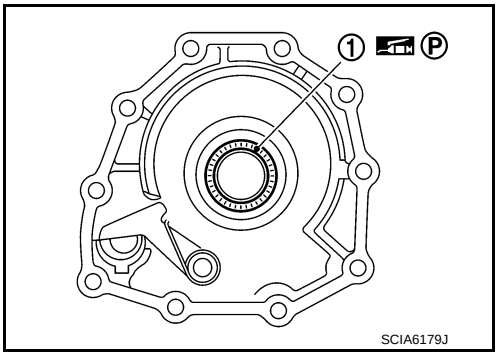

26. Install rear extension assembly (2WD) or adapter case assembly (AWD) according to the following procedures.

a. **2WD**

i. Install seal rings (1) to output shaft.

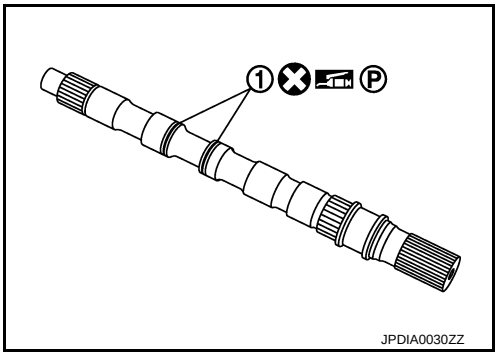

ii. Install parking gear (1) to output shaft (2).

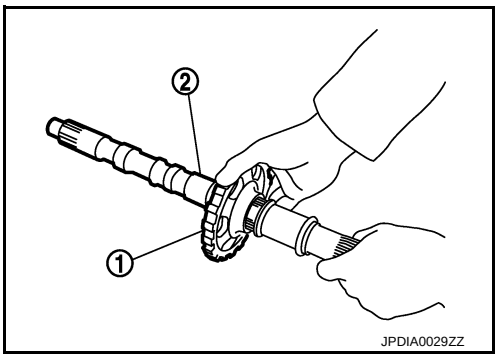

iii. Install output shaft to transmission case.
CAUTION:
Be careful not to mistake front for rear because both sides looks similar. (Thinner end is front side.)

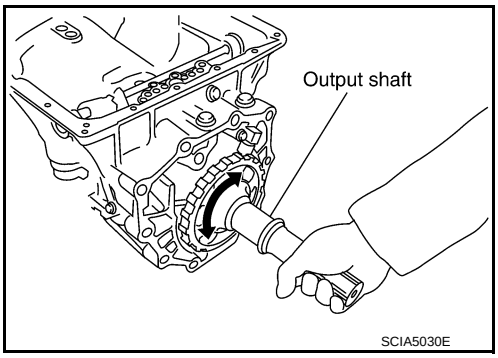

iv. Install bearing race to output shaft.

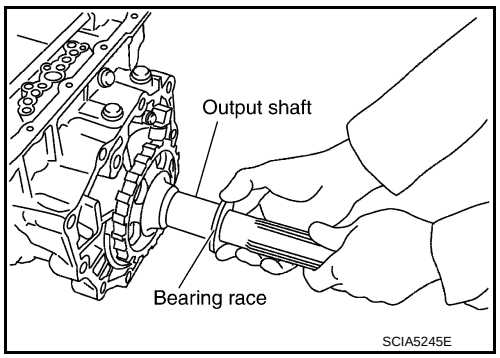

v. Apply recommended sealant (Genuine Anaerobic Liquid Gasket or equivalent. Refer to GI-22, "Recommended Chemical Products and Sealants".) to rear extension assembly as shown in the figure.

Sealant starting point and end-point (A)	**: Start and finish point shall be in the center of two bolts.**
Overlap width of sealant starting point and end-point (B)	**: 3 – 5 mm (0.12 – 0.20 in)**
Sealant width (C)	**: 1.0 – 2.0 mm (0.04 – 0.08 in)**
Sealant height (C)	**: 0.4 – 1.0 mm (0.016 – 0.04 in)**

CAUTION:
Completely remove all moisture, oil and old sealant, etc. from the transmission case and rear extension assembly mounting surfaces.

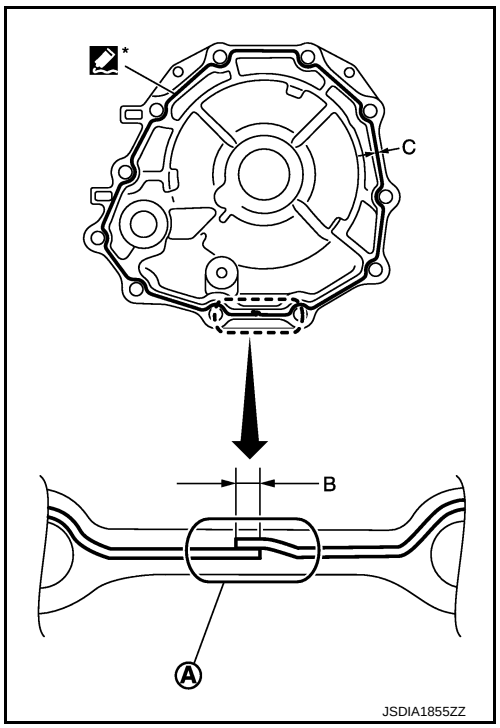

vi. Install rear extension assembly to transmission case.
CAUTION:
Insert the tip of parking rod between the parking pawl and the parking actuator support when assembling the rear extension assembly.

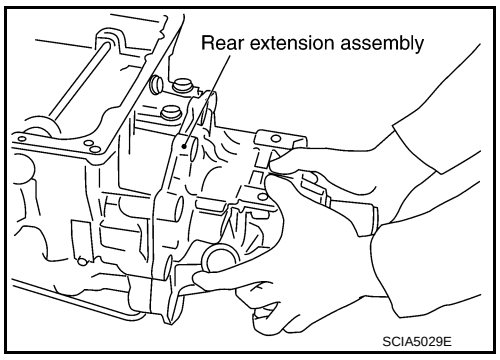

vii. Tighten rear extension assembly bolts to the specified torque.

A : Bolt
B : Self-sealing bolt

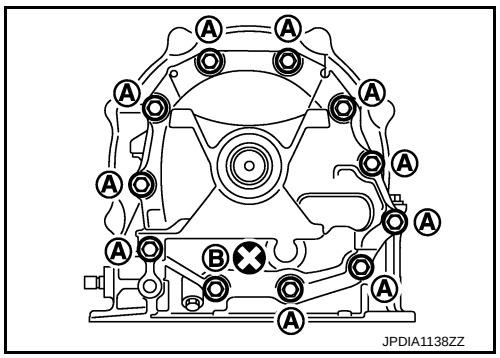

b. **AWD**

i. Install seal rings (1) to output shaft.

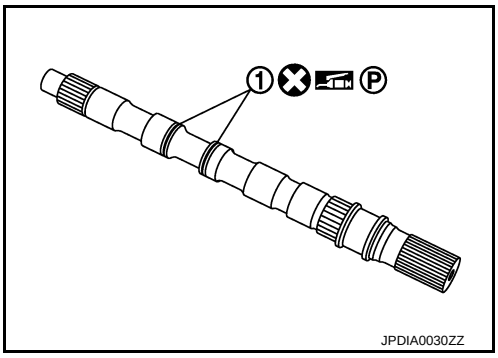

ii. Install parking gear (1) to output shaft (2).

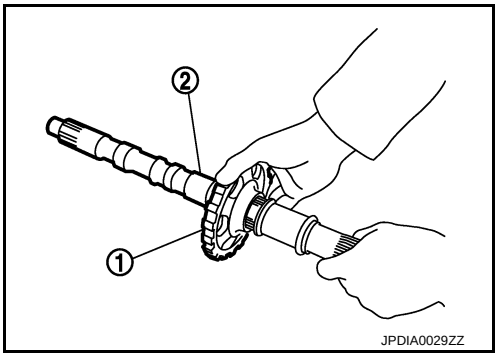

iii. Install output shaft in transmission case.

CAUTION:

Be careful not to mistake front for rear because both sides looks similar. (Thinner end is front side.)

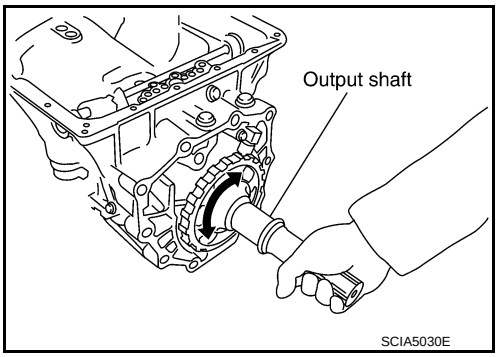

iv. Install bearing race to output shaft.

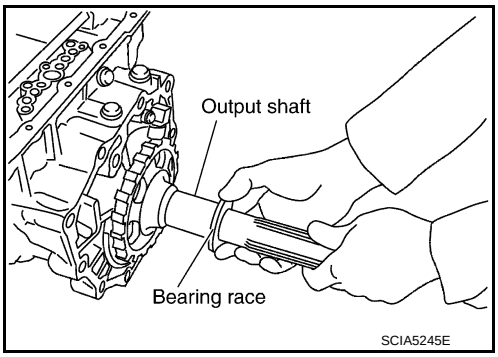

v. Install gasket onto transmission case.

CAUTION:

- **Completely remove all moisture, oil and old gasket, etc. from the transmission case and adapter case assembly mounting surfaces.**
- **Never reuse gasket.**

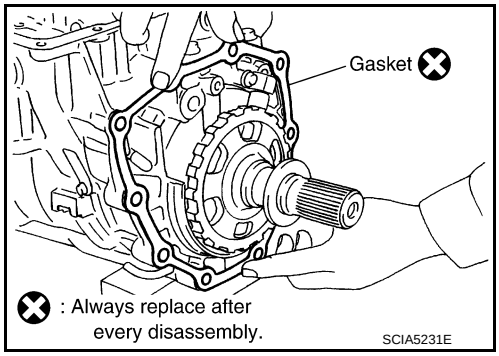

vi. Install adapter case assembly to transmission case.

CAUTION:

Insert the tip of parking rod between the parking pawl and the parking actuator support when assembling the adapter case assembly.

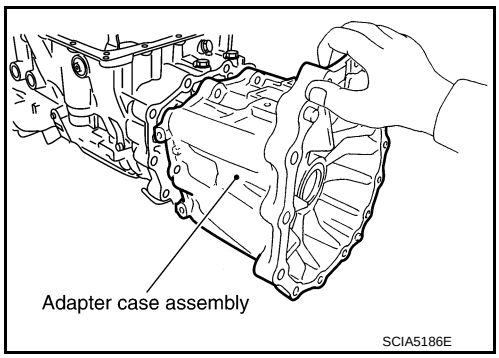

vii. Tighten adapter case assembly bolts to the specified torque.

1 : Bracket
A : Bolt
B : Self-sealing bolt

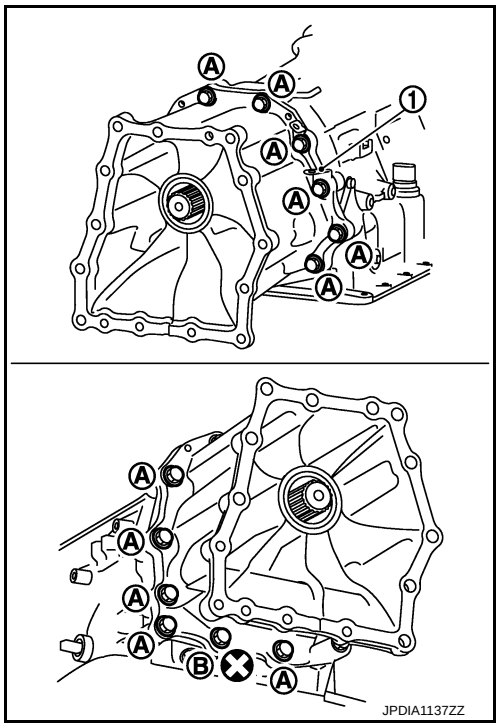

27. Install needle bearing to drum support.

CAUTION:

Check the direction of needle bearing. Refer to TM-331, "Location of Needle Bearings and Bearing Races".

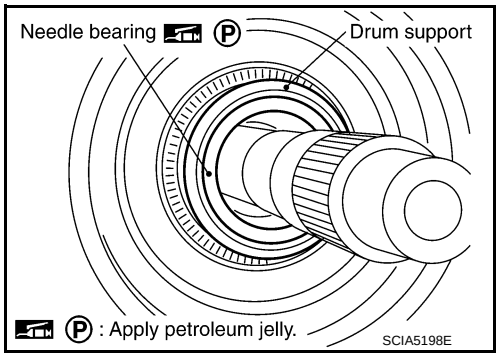

28. Install direct clutch assembly to reverse brake.
CAUTION:
Make sure that drum support edge surface and direct clutch inner boss edge surface come to almost same place.

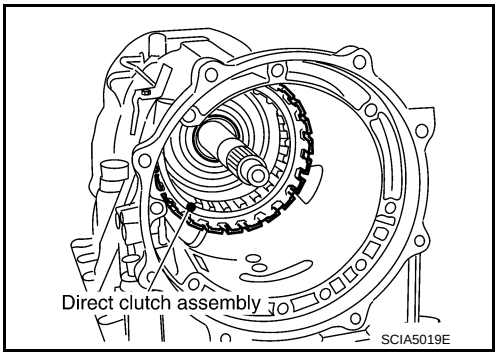

29. Install high and low reverse clutch assembly to direct clutch.

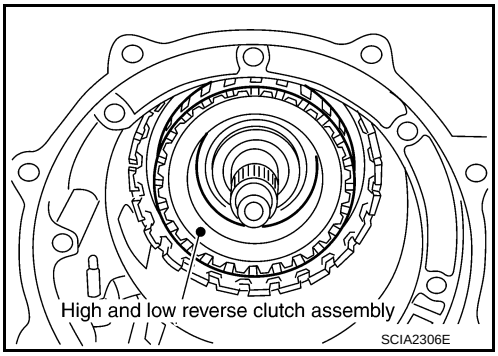

30. Align the drive plate using a flat-bladed screwdriver.

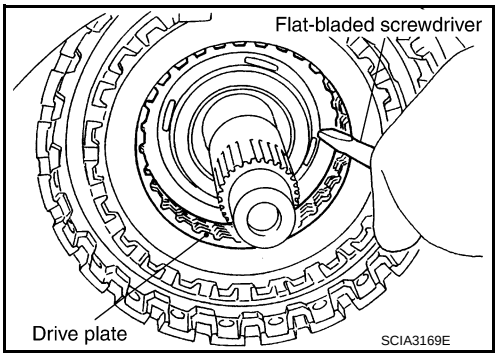

31. Install high and low reverse clutch hub, mid sun gear assembly, and rear sun gear assembly as a unit.

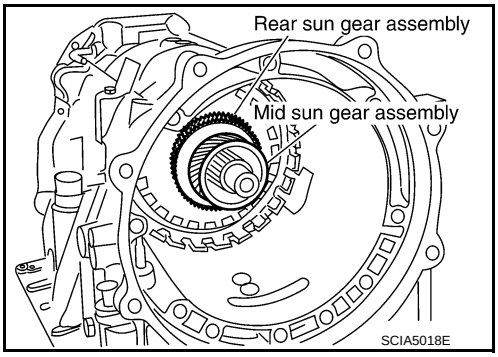

CAUTION:

Make sure that portion “A” of high and low reverse clutch drum protrudes approximately 2 mm (0.08 in) beyond portion “B” of rear sun gear.

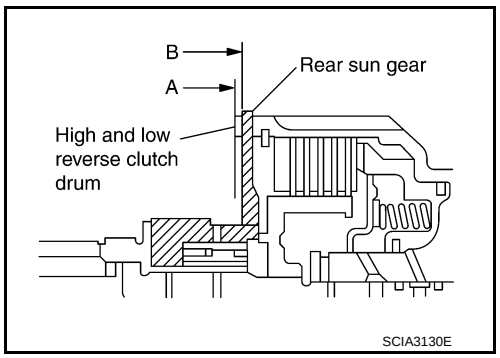

32. Install needle bearing to rear carrier assembly.
CAUTION:
Check the direction of needle bearing. Refer to TM-331, "Location of Needle Bearings and Bearing Races".

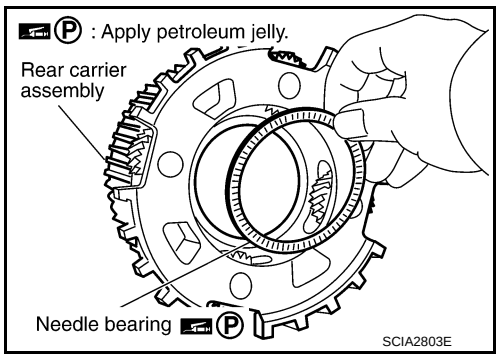

33. Install bearing race to rear carrier assembly.
CAUTION:
Check the direction of needle bearing. Refer to TM-331, "Location of Needle Bearings and Bearing Races".

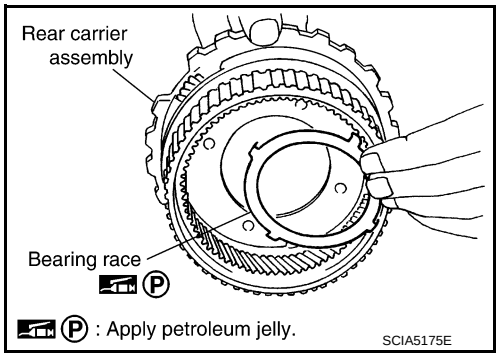

34. Install rear carrier assembly to direct clutch drum.

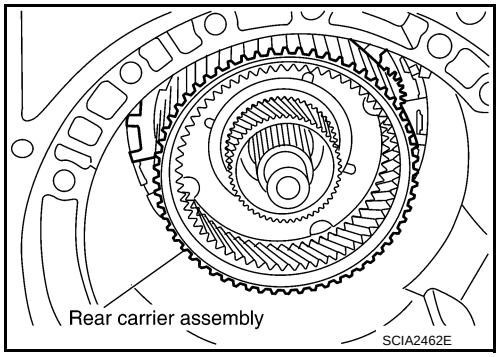

35. Install needle bearing (rear side) to mid carrier assembly.
CAUTION:
Check the direction of needle bearing. Refer to TM-331, "Location of Needle Bearings and Bearing Races".

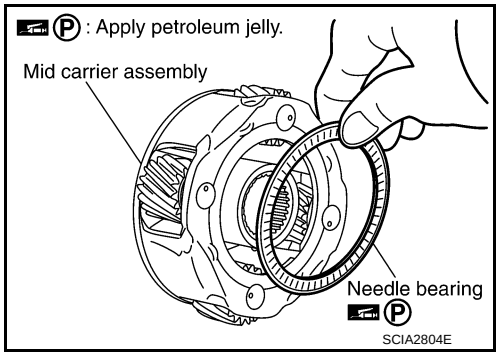

36. Install needle bearing (front side) to mid carrier assembly.
CAUTION:
Check the direction of needle bearing. Refer to TM-331, "Location of Needle Bearings and Bearing Races".

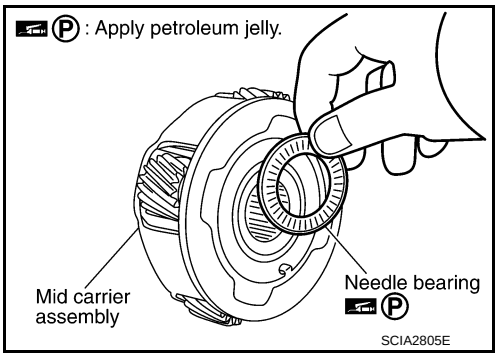

37. Install mid carrier assembly to rear carrier assembly.

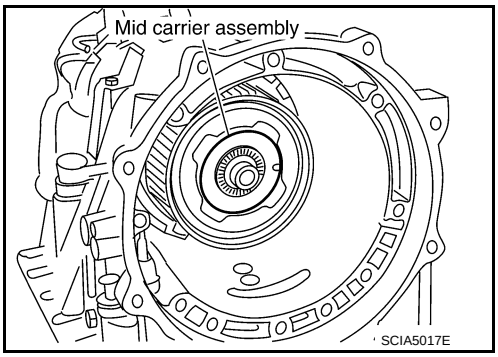

38. Install seal rings (1) to input clutch assembly.

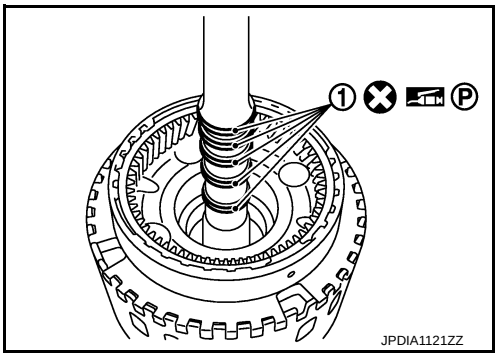

39. Install needle bearing (1) to front carrier assembly.
CAUTION:
Check the direction of needle bearing. Refer to TM-331, "Location of Needle Bearings and Bearing Races".

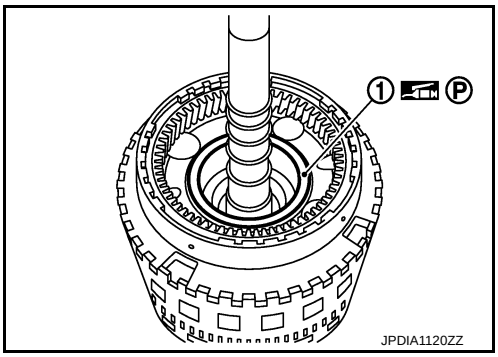

40. Install input clutch assembly (with front carrier assembly and rear internal gear) (1) to transmission case.

CAUTION:

Check that the needle bearing (2) is securely positioned. If the needle bearing position is misaligned, adjust it to the specified position.

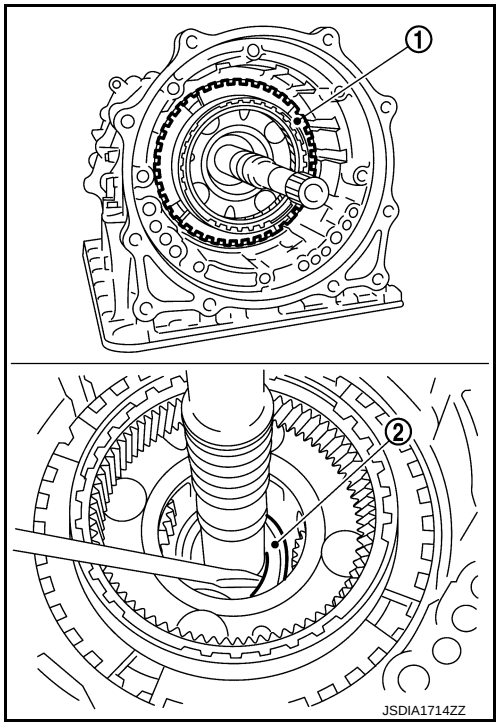

41. Install 1st one-way clutch (1) to front brake hub (with under drive carrier) (2).
42. Check operation of 1st one-way clutch.

a. Hold 1st one-way clutch.

b. Check front brake hub for correct locking and unlocking directions.

⬅ : Unlocked

⇦ : Locked

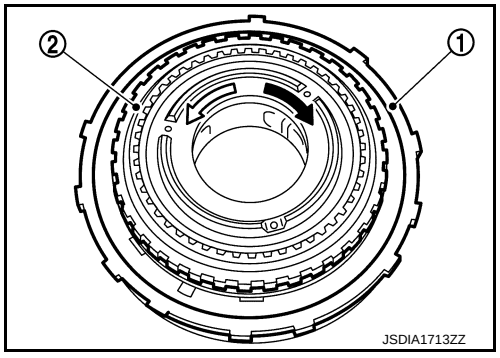

CAUTION:

If not shown in figure, check installation direction of 1st one-way clutch.

43. Install under drive carrier (with 1st one-way clutch) (1) to transmission case.

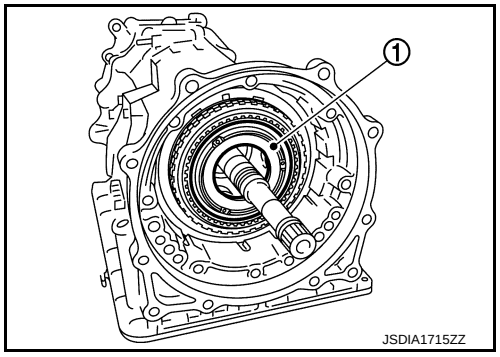

44. Install snap ring (1) to transmission case.
CAUTION:
Be careful not to damage snap ring.

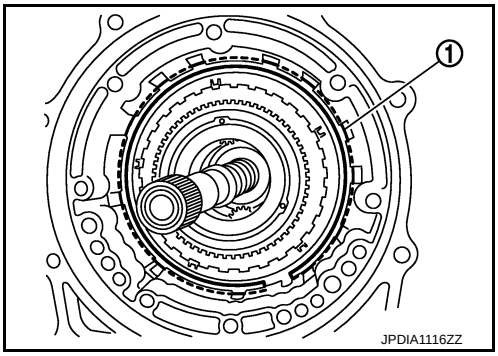

45. Install front brake component part (retaining plates, drive plates and driven plate) to transmission case.

1 : Retaining plate (thin)
2 : Drive plate
3 : Driven plate
4 : Retaining plate (thick)
⇦ : Front

CAUTION:
Check order of plates.

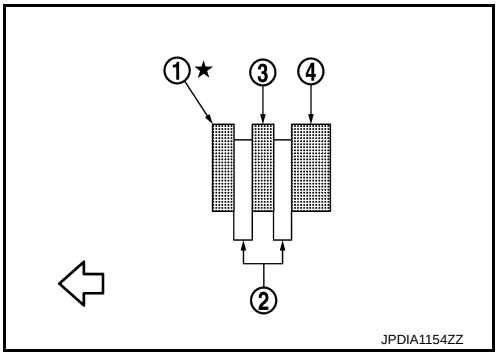

46. Install needle bearing (1) to under drive carrier assembly.
CAUTION:
Check the direction of needle bearing. Refer to TM-331, "Location of Needle Bearings and Bearing Races".

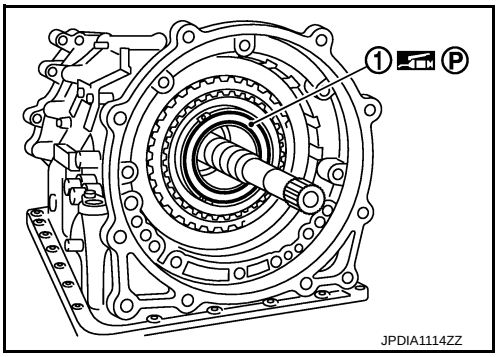

47. Install under drive sun gear (1) to under drive carrier assembly.

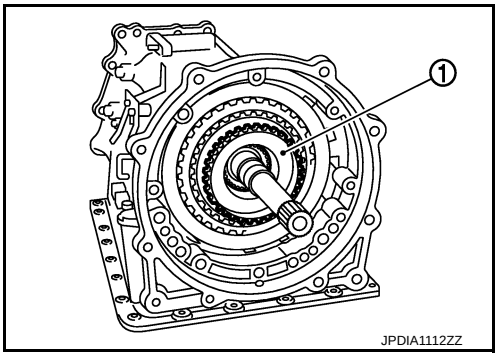

48. Adjustment of total end play “T”.
- Measure clearance between bearing race (1) and oil pump cover (2).
- Select proper thickness of bearing race so that end play is within specifications.

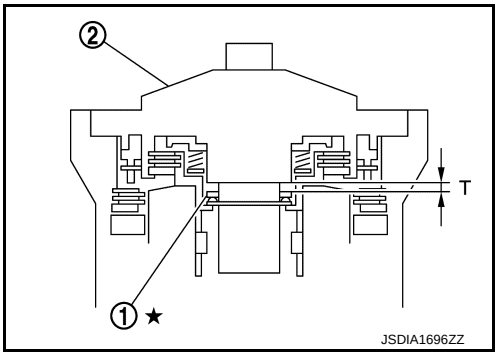

a. Measure dimensions “K” and “L”, and calculate dimension “J”.

1 : Transmission case
2 : Under drive sun gear
A : Straightedge

“J” : Distance between the oil pump fitting surface of transmission case and the needle bearing mating surface of under drive sun gear.

J = K – L

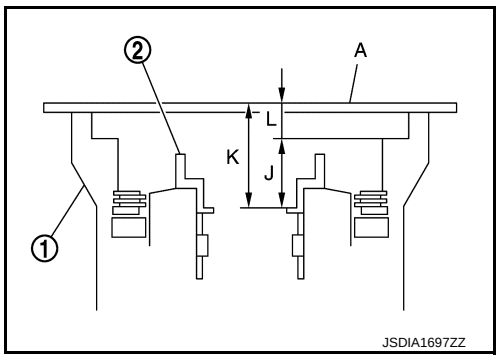

i. Measure dimension “K” between the converter housing fitting surface of transmission case (1) and the needle bearing mating surface of under drive sun gear (2).

CAUTION:
- **Never change the straightedge (A) installation position before the completion of “L” measurement.**
- **Measure dimension “K” in at least three places, and take the average.**

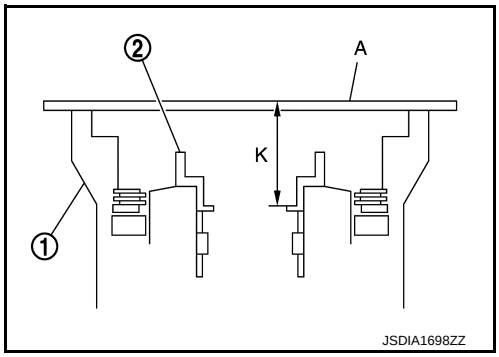

ii. Measure dimension “L” between the converter housing fitting surface of transmission case and the oil pump fitting surface of transmission case.

1 : Transmission case
A : Straightedge

CAUTION:
Measure dimension “L” in at least three places, and take the average.

iii. Calculate dimension “J”.

J = K – L

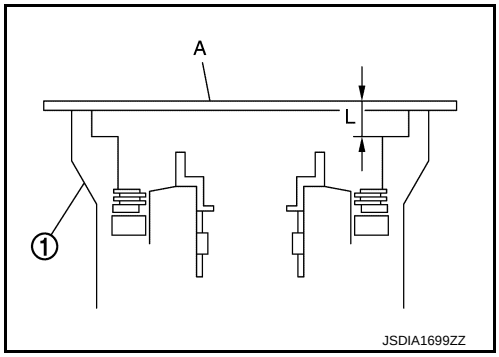

b. Measure dimensions “M_1” and “M_2”, and calculate dimension “M”.

1 : Bearing race
2 : Needle bearing
3 : Oil pump assembly
A : Straightedge

“M” : Distance between the transmission case fitting surface of oil pump and the needle bearing on oil pump.

M = M_1 – M_2

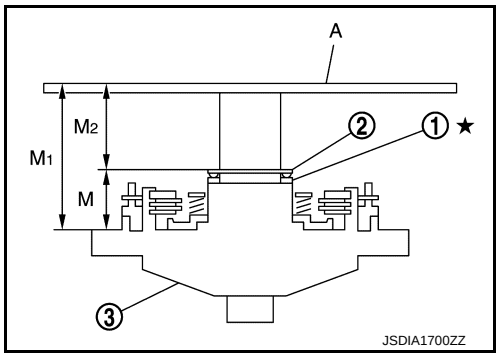

i. Place bearing race (1) and needle bearing (2) on oil pump assembly (3).

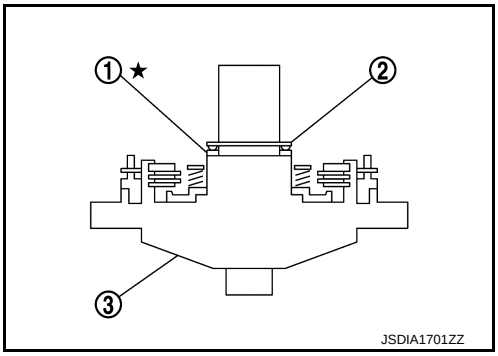

ii. Measure dimension "M_1" between the transmission case fitting surface of oil pump and the end of oil pump.

1 : Bearing race
2 : Needle bearing
3 : Oil pump assembly
A : Straightedge

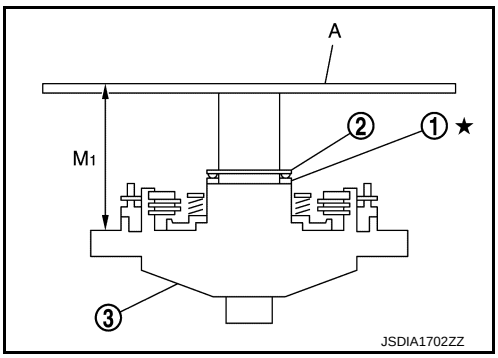

CAUTION:
Measure dimension "M_1" in at least three places, and take the average.

iii. Measure dimension "M_2" between the needle bearing on oil pump and the end of oil pump.

1 : Bearing race
2 : Needle bearing
3 : Oil pump assembly
A : Straightedge

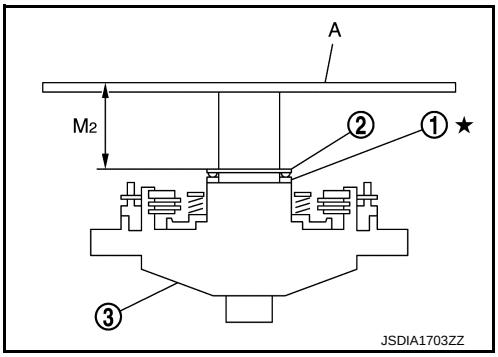

CAUTION:
Measure dimension "M_2" in at least three places, and take the average.

iv. Calculate dimension "M".

$M = M_1 - M_2$

c. Adjust total end play "T".

1 : Bearing race
2 : Oil pump assembly

$T = J - M$

Total end play "T" : Refer to TM-409, "Total End Play".

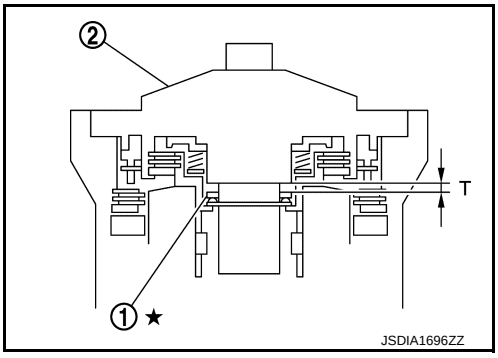

- Select proper thickness of bearing race so that total end play is within specifications.

Bearing races : Refer to TM-409, "Total End Play".

49. Adjustment of front brake clearance “C”.
    - Measure clearance between front brake piston (1) and front brake retaining plate (2).
    - Select proper thickness of front brake retaining plat so that clearance is within specifications.

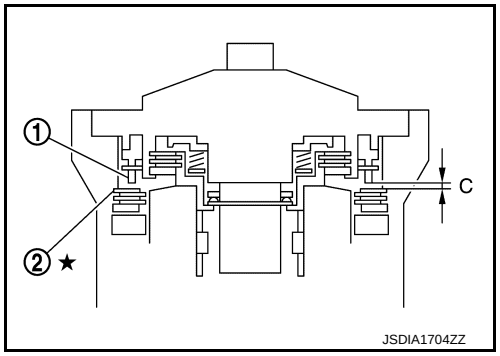

a. Measure dimensions “O” and “P”, and calculate dimension “N”.

1 : Transmission case
2 : Front brake retaining plate
A : Straightedge

“N” : Distance between the oil pump fitting surface of transmission case and the front brake retaining plate.

N = O – P

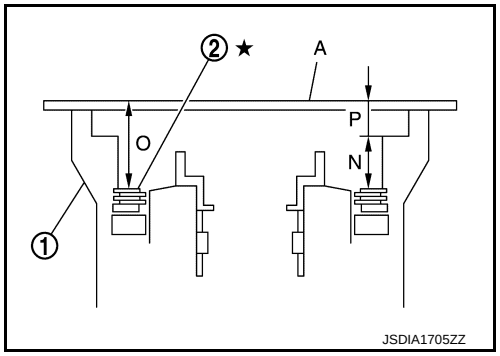

i. Measure dimension “O” between the converter housing fitting surface of transmission case (1) and the front brake retaining plate (2).

CAUTION:
- **Never change the straightedge (A) installation position before the completion of “P” measurement.**
- **Measure dimension “O” in at least three places, and take the average.**

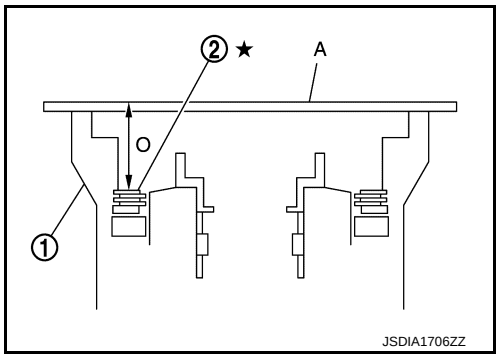

ii. Measure dimension “P” between the converter housing fitting surface of transmission case and the oil pump fitting surface of transmission case.

1 : Transmission case
A : Straightedge

CAUTION:
Measure dimension “P” in at least three places, and take the average.

iii. Calculate dimension “N”.

N = O – P

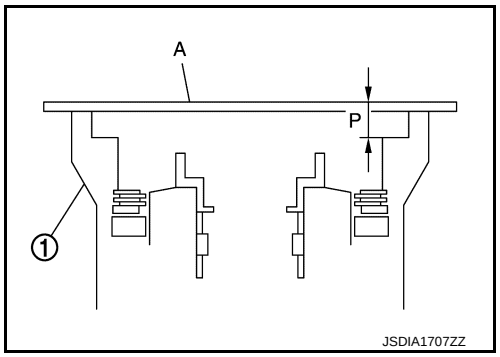

b. Measure dimensions “Q_1” and “Q_2”, and calculate dimension “Q”.

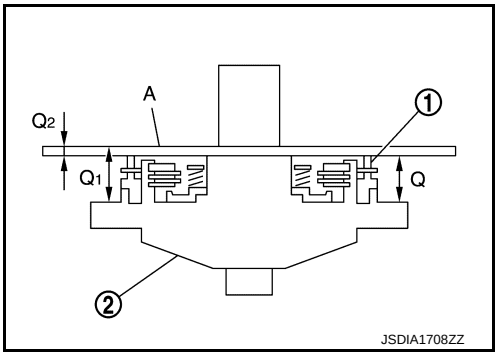

1 : Front brake piston
2 : Oil pump assembly
A : Straightedge

“Q” : Distance between the transmission case fitting surface of oil pump and the front brake piston.

$Q = Q_1 – Q_2$

i. Measure dimension “Q_1” between the transmission case fitting surface of oil pump and the straightedge on front brake piston.

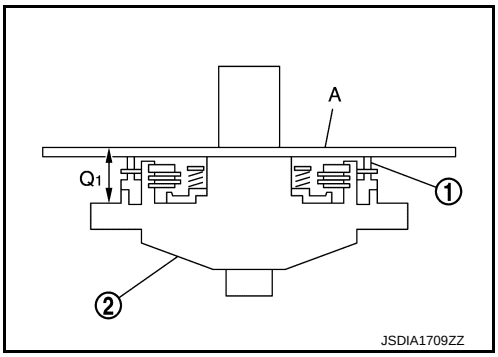

1 : Front brake piston
2 : Oil pump assembly
A : Straightedge

CAUTION:
Measure dimension “Q_1” in at least three places, and take the average.

ii. Measure dimension “Q_2” of the straightedge.

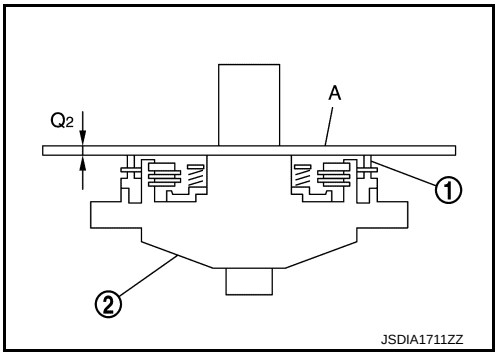

1 : Front brake piston
2 : Oil pump assembly
A : Straightedge

iii. Calculate dimension “Q”.

$Q = Q_1 – Q_2$

c. Adjust front brake clearance “C”.

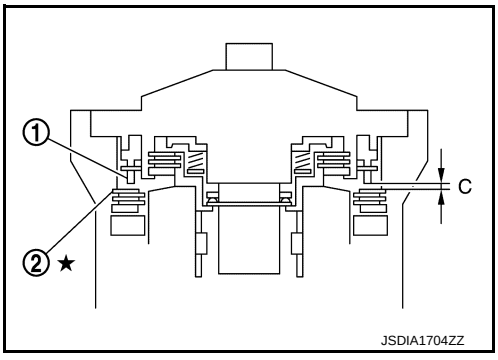

1 : Front brake piston
2 : Front brake retaining plate

C = N – Q

Front brake clearance “C” : Refer to TM-409, "Front Brake Clearance".

- Select proper thickness of front brake retaining plate so that front brake clearance is within specifications.

Retaining plate : Refer to TM-409, "Front Brake Clearance".

50. Remove under drive sun gear (1) from under drive carrier assembly.

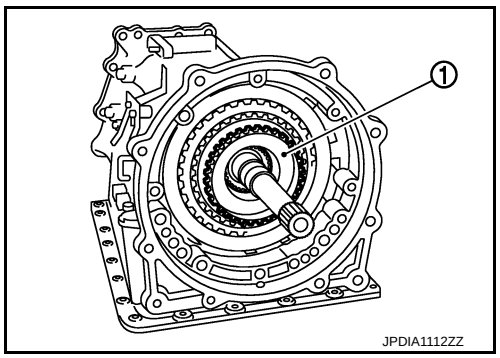

51. Install needle bearing (1) to under drive sun gear.
CAUTION:
Check the direction of needle bearing. Refer to TM-331, "Location of Needle Bearings and Bearing Races".

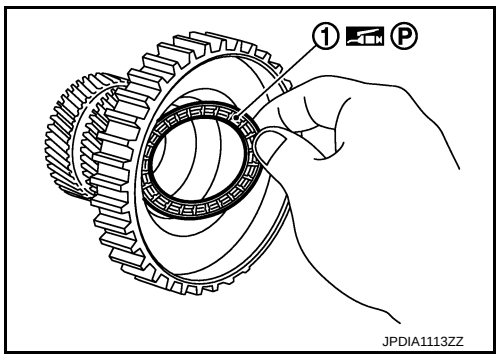

52. Install O-ring (1) to oil pump assembly.

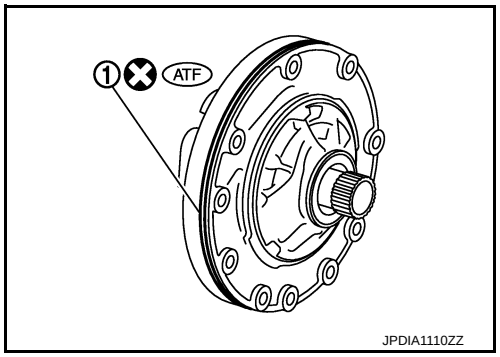

53. Install seal ring (1) to oil pump assembly.

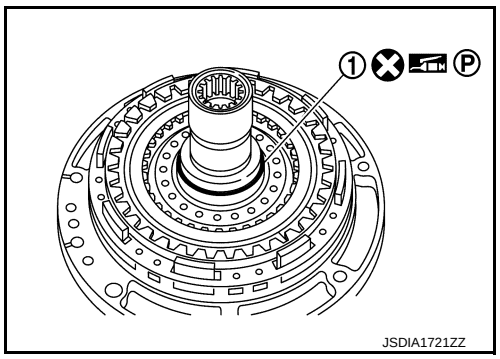

54. Install bearing race (1) to oil pump assembly.

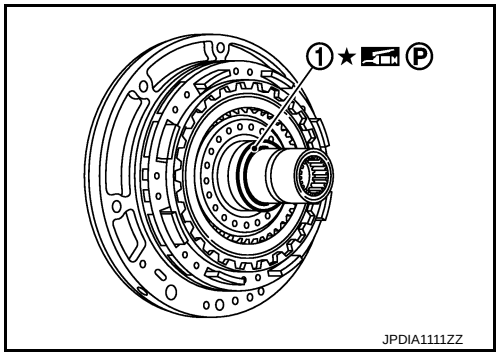

55. Install under drive sun gear (with needle bearing) (1) to oil pump assembly (2).

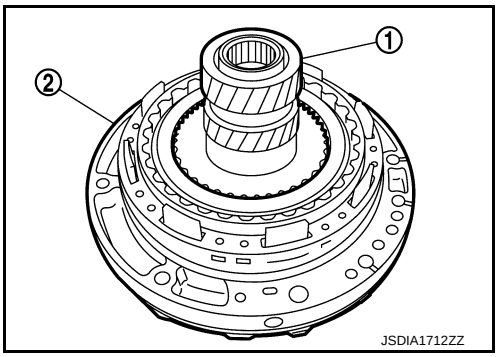

56. Install oil pump assembly (with under drive sun gear) to transmission case.

CAUTION:
Apply ATF to oil pump bearing.

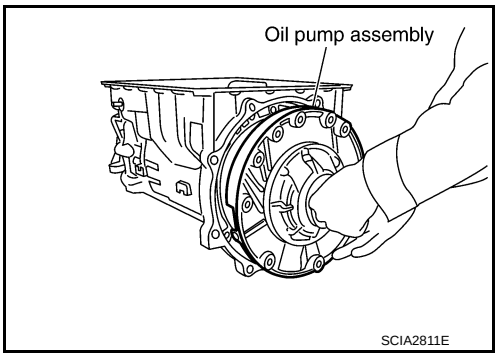

57. Apply recommended sealant to oil pump assembly as shown in the figure.

: Genuine RTV silicone sealant or equivalent. Refer to GI-22, "Recommended Chemical Products and Sealants".

CAUTION:
Completely remove all moisture, oil and old sealant, etc. from the oil pump mounting bolts and oil pump mounting bolt mounting surfaces.

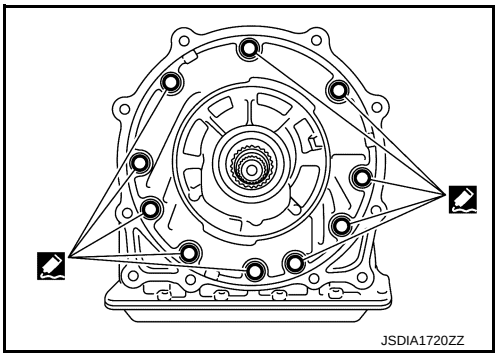

58. Tighten oil pump bolts (⬅) to the specified torque.

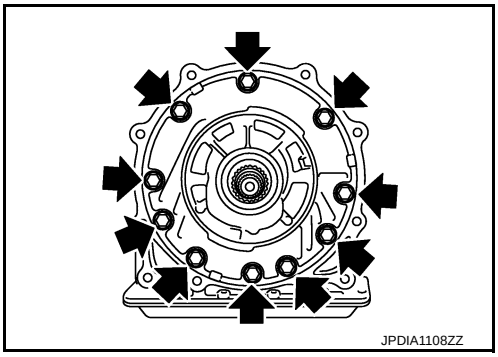

59. Install O-ring to input clutch assembly.

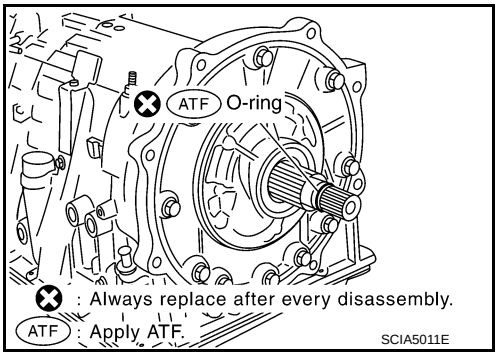

60. Install converter housing to transmission case, and tighten converter housing bolts (⬅) to the specified torque.

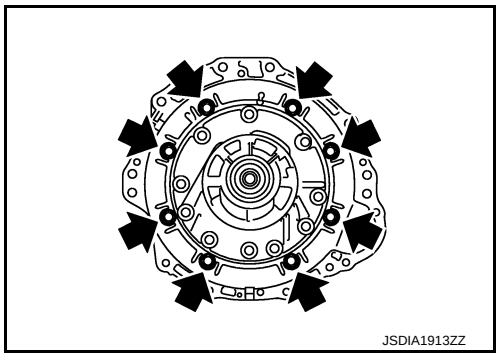

61. Connect TCM connector (A) to joint connector.

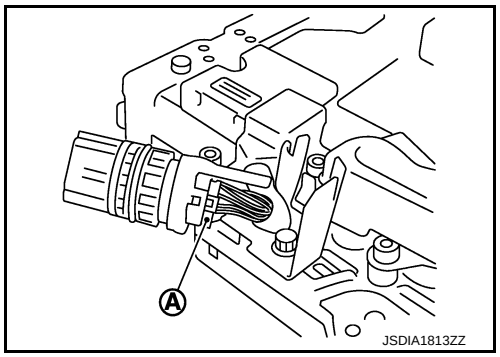

62. Install joint connector (1) to the control valve & TCM.
CAUTION:
Apply ATF to O-ring of joint connector.

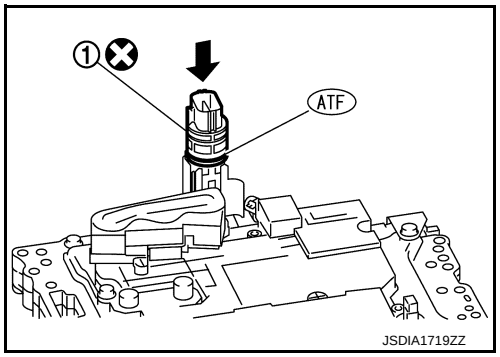

63. Install the control valve & TCM (1) to transmission case.

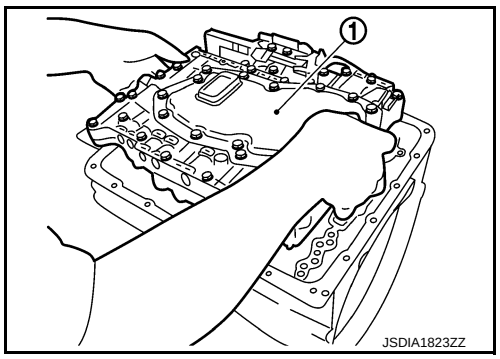

CAUTION:

- **Make sure that input speed sensor securely installs input speed sensor holes (A).**
- **Hang down output speed sensor harness toward outside so as not to disturb installation of the control valve & TCM.**
- **Adjust joint connector of the control valve & TCM to terminal hole of transmission case.**

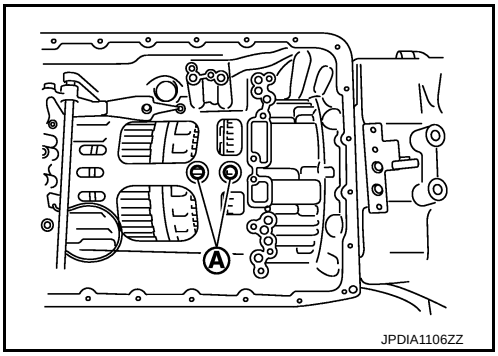

- **Assemble it so that manual valve cutout is engaged with manual plate projection.**

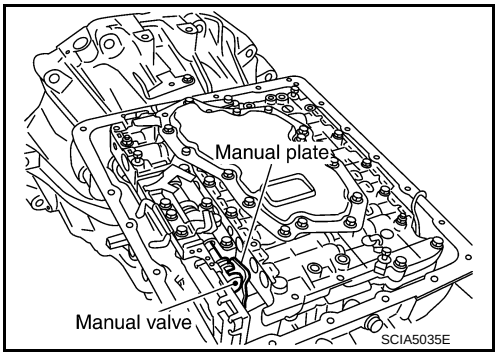

64. Install bolts and clip (1) to the control valve & TCM. Tighten bolt (E) to the specified torque before tightening the other than bolts.

⇦ : Front

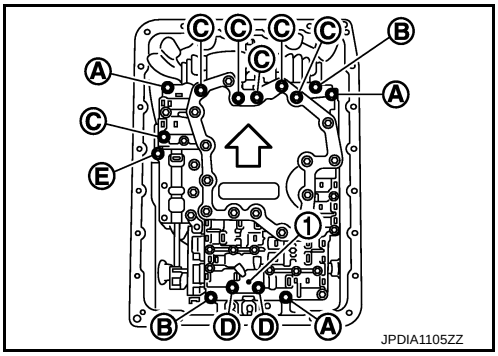

Bolt symbol	Length mm (in)	Number of bolts
A	43 (1.69)	3
B	40 (1.57)	2
C	54 (2.13)	6
D	50 (1.97)	2
E*	50 (1.97)	1

*: Reamer bolt

65. Connect output speed sensor connector (A).
66. Engage output speed sensor harness with terminal clips (⬅).

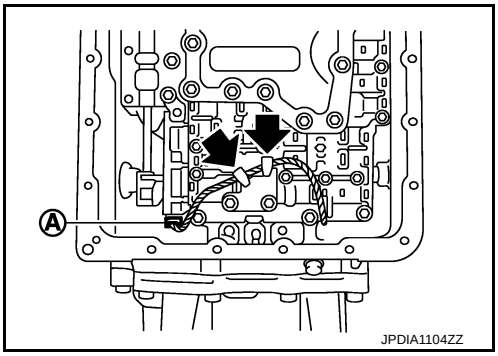

67. Pull down joint connector (1).
CAUTION:
Be careful not to damage connector.

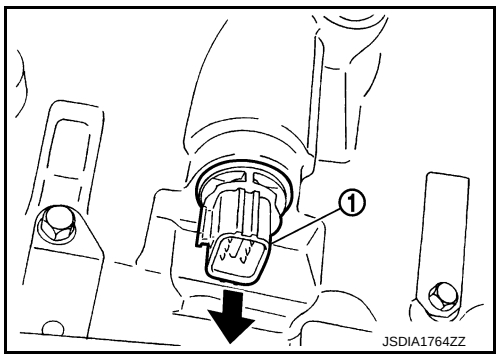

68. Install snap ring (1) to joint connector (2).

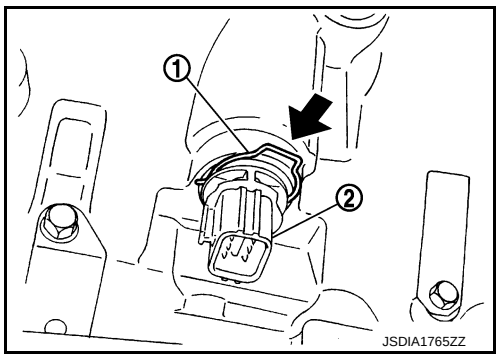

69. Install magnets (1) in oil pan.
70. Install oil pan gasket to transmission case.
CAUTION:
- **Never reuse oil pan gasket.**
- **Install it in the direction to align hole positions.**
- **Completely remove all moisture, oil and old gasket, etc. from oil pan gasket mounting surface.**

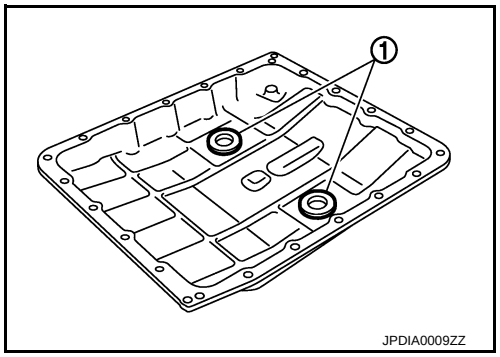

71. Install oil pan (2) and clips (1) to transmission case.

⇦ : Front

⬅ : Oil pan mounting bolt

CAUTION:
- **Be careful not to pinch harnesses.**
- **Completely remove all moisture, oil and old gasket, etc. from oil pan mounting surface.**

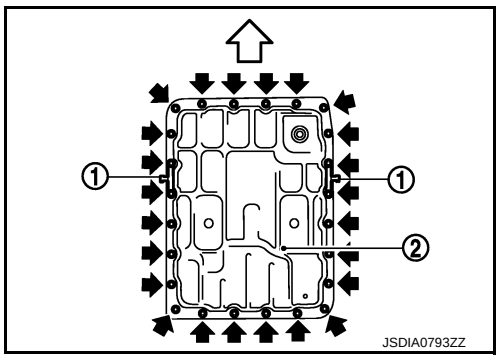

72. Tighten oil pan mounting bolts to the specified torque in numerical order shown in the figure after temporarily tightening them. Tighten oil pan mounting bolts to the specified torque.

⇦ : Front

CAUTION:
Never reuse oil pan mounting bolts.

73. Install drain plug to oil pan. Tighten drain plug to the specified torque.
CAUTION:
Never reuse drain plug gasket.

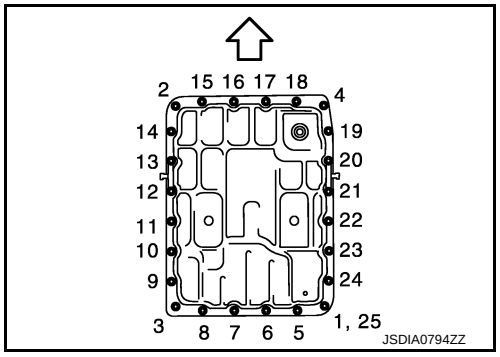

74. Pour ATF into torque converter.
    - **Approximately 2 liter (2-1/8 US qt, 1-3/4 Imp qt) of ATF is required for a new torque converter.**
    - **When reusing old torque converter, add the same amount of ATF as was drained.**

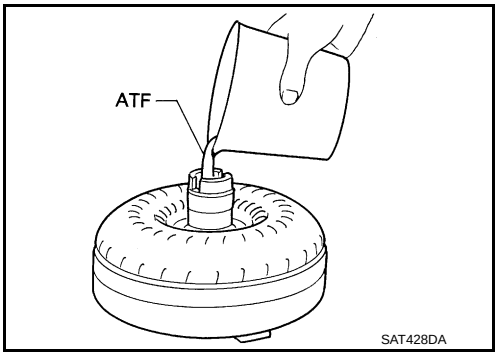

75. Install torque converter while aligning notches of torque converter with notches of oil pump.
    CAUTION:
    Install torque converter while rotating it.

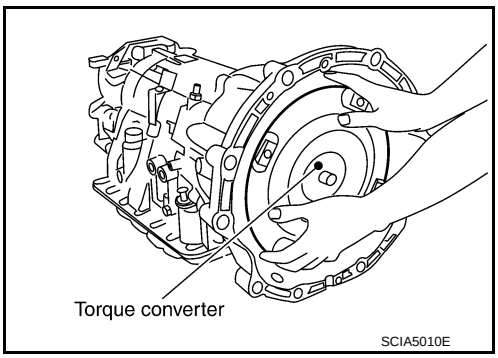

76. Measure dimension “A” to make sure that torque converter is in proper position.

    B : Scale
    C : Straightedge

    Dimension “A” : Refer to TM-409, "Torque Converter".

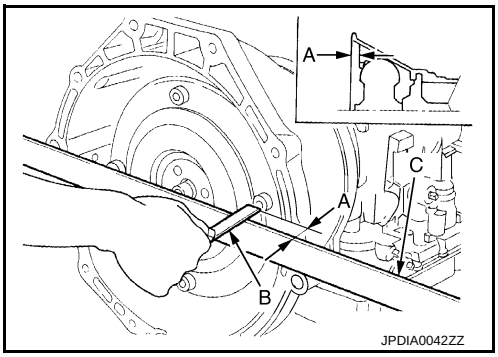

Inspection

INFOID:0000000006365110

INSPECTION AFTER REMOVAL

Oil Pan

Check foreign materials in oil pan to help determine causes of malfunction. If the ATF is very dark, smells burned, or contains foreign particles, the frictional material (clutches, band) may need replacement. A tacky film that will not wipe clean indicates varnish build up. Varnish can cause valves, servo, and clutches to stick and can inhibit pump pressure.

- **If frictional material is detected, perform A/T fluid cooler cleaning. Refer to TM-270, "Cleaning".**

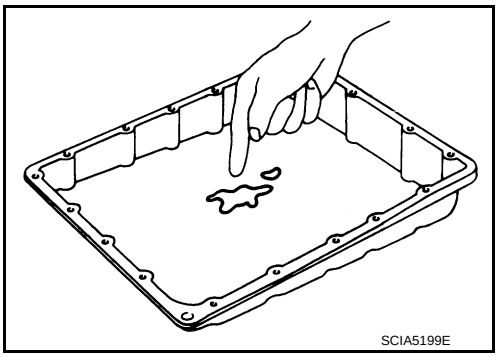

Torque Converter

Check torque converter one-way clutch using a check tool as shown at figure.

1. Insert a check tool into the groove of bearing support built into one-way clutch outer race.
2. When fixing bearing support with a check tool, rotate one-way clutch spline using a screwdriver.
3. Make sure that inner race rotates clockwise only. If not, replace torque converter assembly.

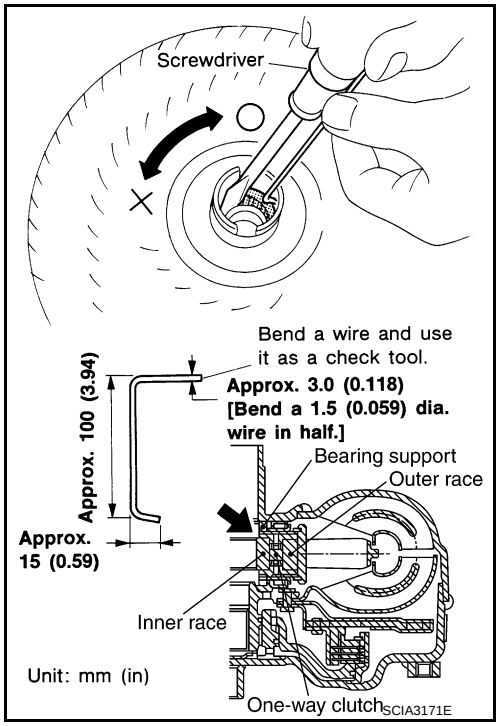

1st One-way Clutch

Check operation of 1st one-way clutch.

1. Install 1st one-way clutch (1) to front brake hub (with under drive carrier).
2. Hold 1st one-way clutch.
3. Check front brake hub for correct locking and unlocking directions. If necessary, replace 1st one-way clutch.

⬅ : Unlocked

⇦ : Locked

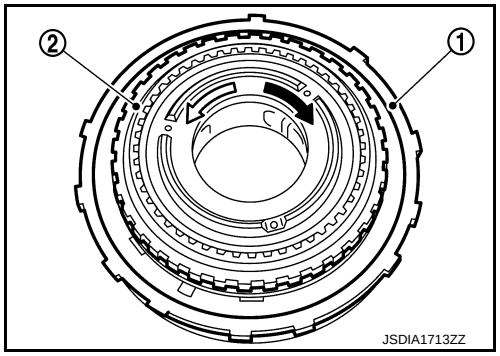

Under Drive Sun Gear

Check for deformation, fatigue or damage. If necessary, replace the under drive sun gear.

Mid Carrier Assembly

Check for deformation, fatigue or damage. If necessary, replace the mid carrier assembly.

Rear Carrier Assembly

Check for deformation, fatigue or damage. If necessary, replace the rear carrier assembly.

Reverse Brake Drive Plates

Check facing for burns, cracks or damage. If necessary, replace the plate.

Reverse Brake Retaining Plate, Driven Plates and Dish Plates

Check facing for burns, cracks or damage. If necessary, replace the plate.

Each Snap Ring

Check for deformation, fatigue or damage. If necessary, replace the snap ring.

Parking Actuator Support and Parking Pawl

If the contact surface on parking actuator support and parking pawl has excessive wear, abrasion, bend or any other damage, replace the components.

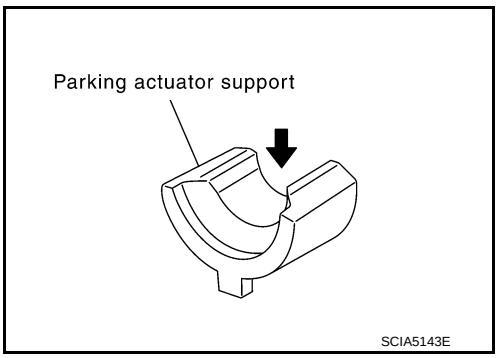

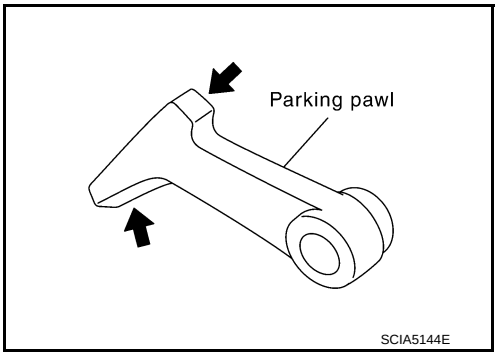

OIL PUMP, 2346 BRAKE, FRONT BRAKE PISTON

Exploded View

INFOID:0000000006365111

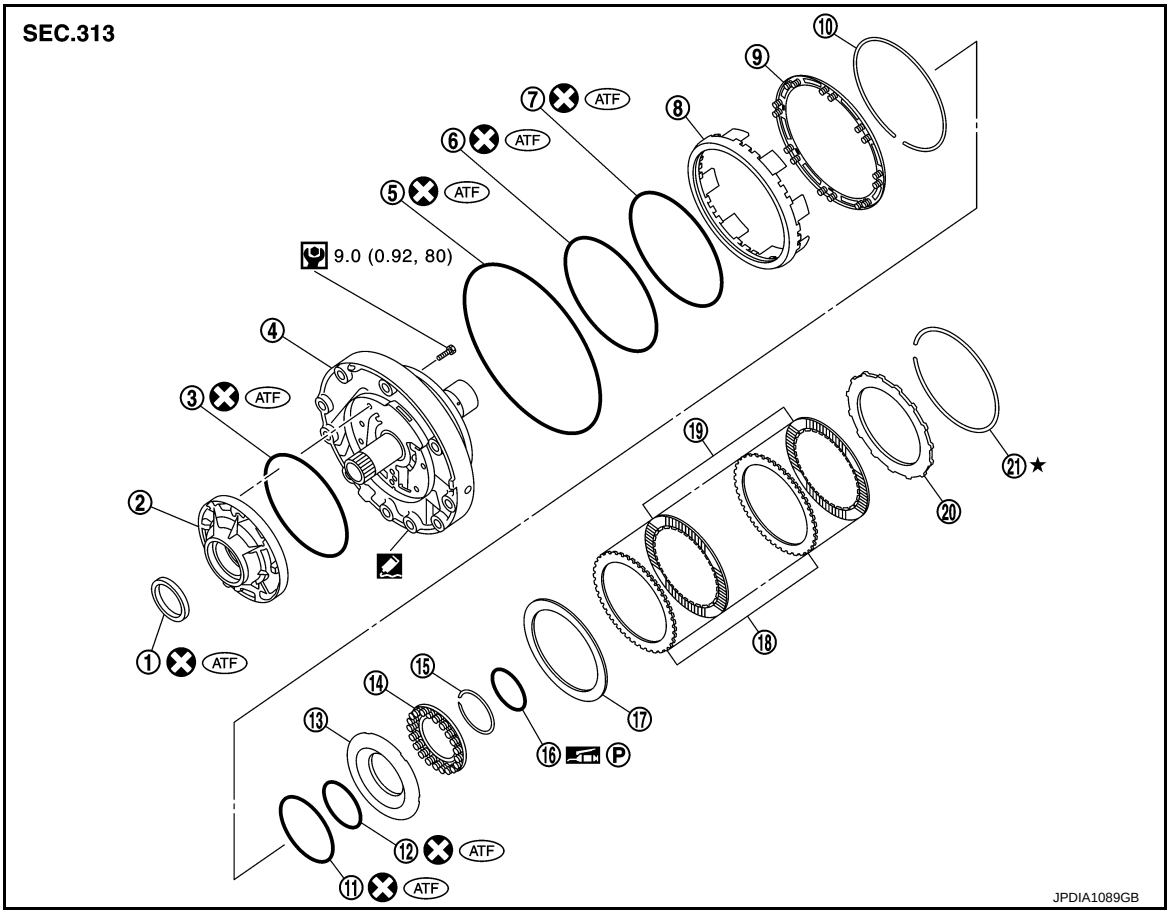

1. Oil pump housing oil seal	2. Oil pump housing	3. O-ring
4. Oil pump cover	5. O-ring	6. D-ring
7. D-ring	8. Front brake piston	9. Front brake spring retainer
10. Snap ring	11. D-ring	12. D-ring
13. 2346 brake piston	14. 2346 brake spring retainer	15. Snap ring
16. Seal ring	17. 2346 brake dish plate	18. 2346 brake driven plate
19. 2346 brake drive plate	20. 2346 brake retaining plate	21. Snap ring

: Apply Genuine RTV silicone sealant or equivalent. Refer to GI-22, "Recommended Chemical Products and Sealants".

Refer to GI-4, "Components" for symbols not described on the above.

Disassembly

INFOID:0000000006365112

1. Remove snap ring (1) from oil pump assembly using a flat-bladed screwdriver (A).

CAUTION:

- **Be careful not to scratch oil pump cover and 2346 brake retaining plate.**
- **Be careful not to damage snap ring.**

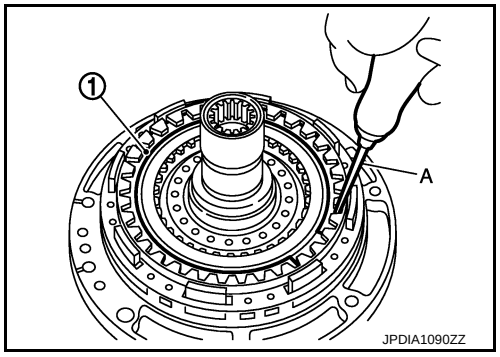

2. Remove 2346 brake component part (retaining plate, drive plates, driven plates and dish plate) (1) from oil pump assembly.

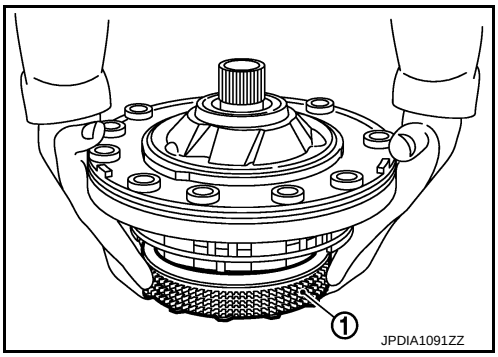

3. Remove seal ring (1) from oil pump assembly.

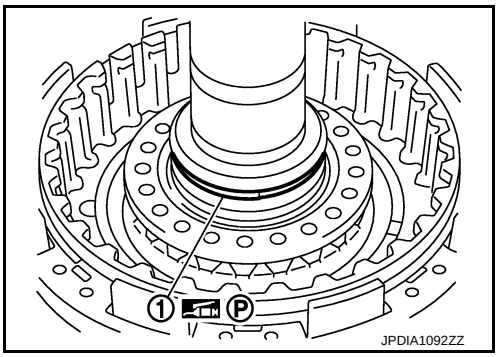

4. Set the clutch spring compressor (SST: KV31103800) (A) on front brake spring retainer and remove snap ring (fixing front brake spring retainer) (1) from oil pump assembly while compressing return spring.

CAUTION:
Be careful not to expand snap ring excessively.

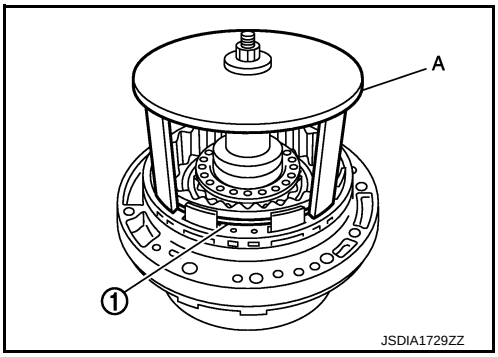

5. Remove front brake spring retainer (1) from oil pump assembly.

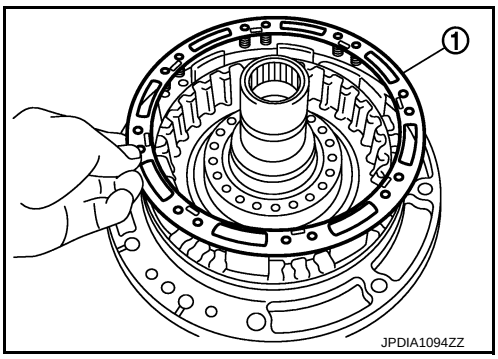

6. Set the clutch spring compressor [SST: KV31102400 (J-34285 and J-34285-87)] (A) on 2346 brake spring retainer and remove snap ring (fixing 2346 brake spring retainer) (1) from oil pump assembly while compressing return spring.

B : Press

CAUTION:
Be careful not to expand snap ring excessively.

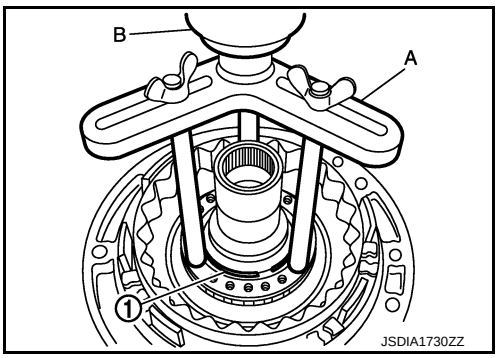

7. Remove 2346 brake spring retainer (1) from oil pump assembly.

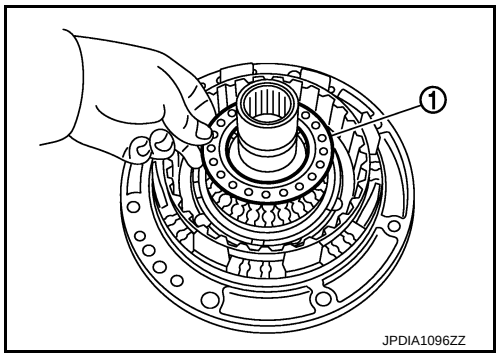

8. Remove front brake piston (1) from oil pump assembly with compressed air. Refer to TM-331, "Oil Channel".

A : Front brake pressure hole

CAUTION:
Care should be taken not to abruptly blow air. It makes piston incline, as the result, it becomes hard to disassemble the piston.

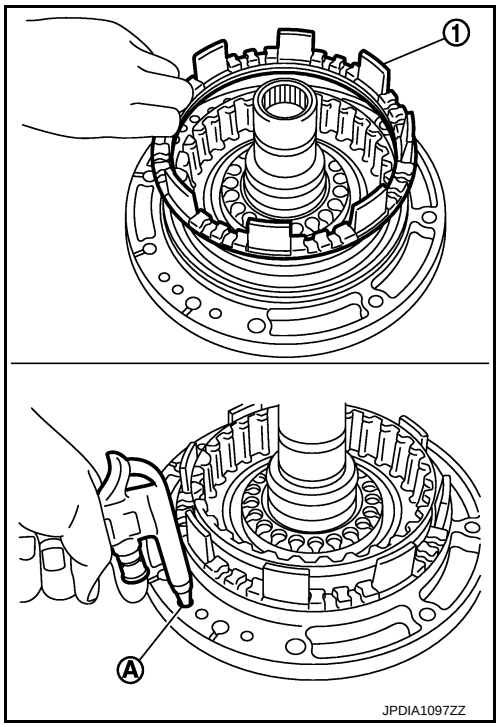

9. Remove D-ring (inner) (1) and D-ring (outer) (2) from front brake piston.

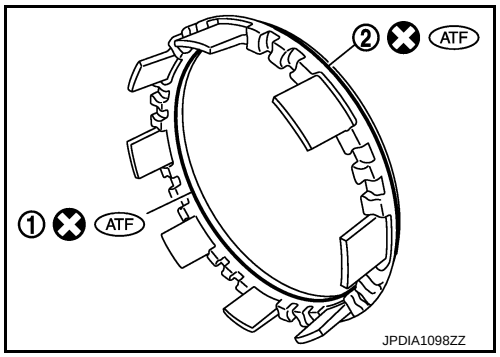

10. Remove 2346 brake piston (1) from oil pump assembly with compressed air. Refer to TM-331, "Oil Channel".

A : 2346 brake pressure hole

CAUTION:
Care should be taken not to abruptly blow air. It makes piston incline, as the result, it becomes hard to disassemble the piston.

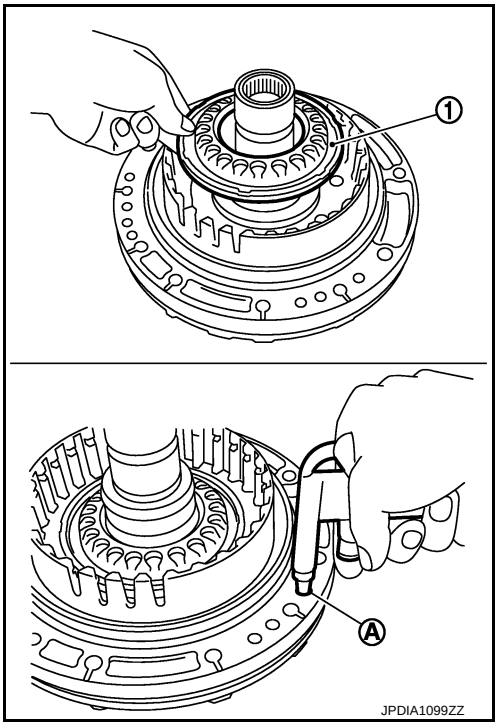

11. Remove D-ring (large) (1) and D-ring (small) (2) from 2346 brake piston.

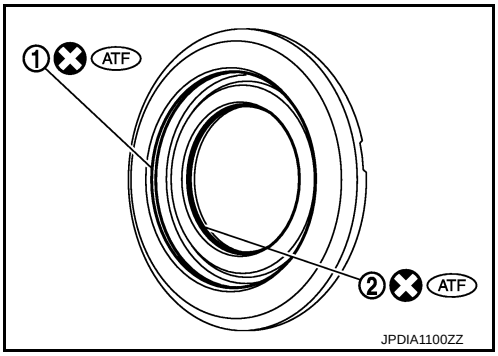

12. loosen bolts (⬅) in numerical order shown in the figure and remove oil pump housing from oil pump cover.

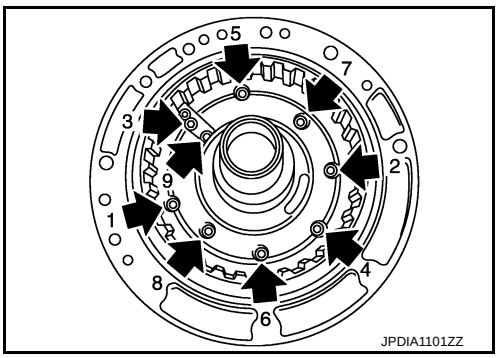

13. Remove oil pump housing oil seal using a flat-bladed screwdriver.

CAUTION:
Be careful not to scratch oil pump housing.

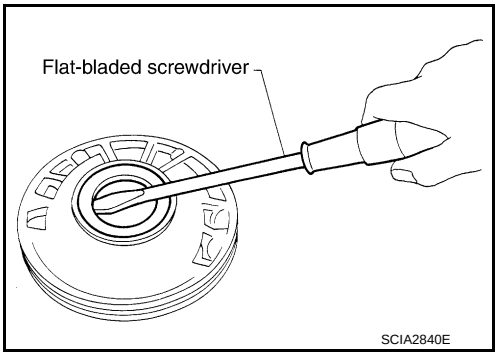

14. Remove O-ring from oil pump housing.

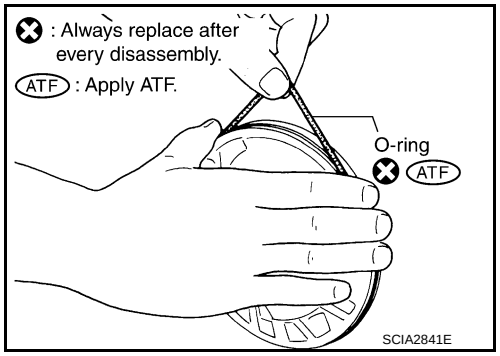

15. Remove O-ring (1) from oil pump cover.

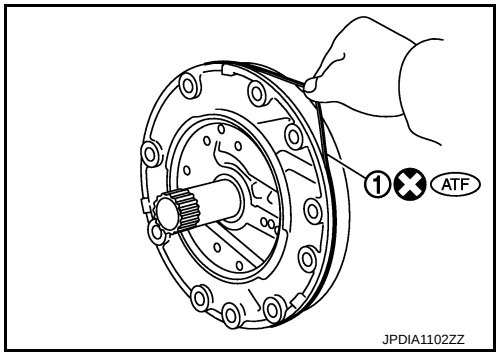

Assembly

INFOID:0000000006365113

1. Install O-ring (1) to oil pump cover.

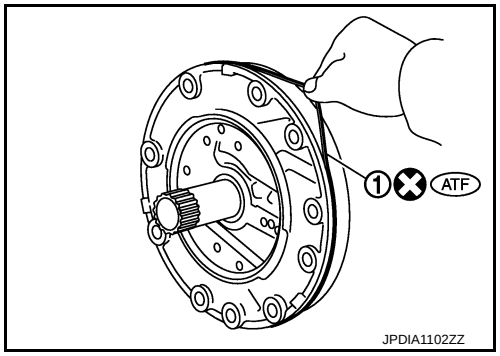

2. Install O-ring to oil pump housing.

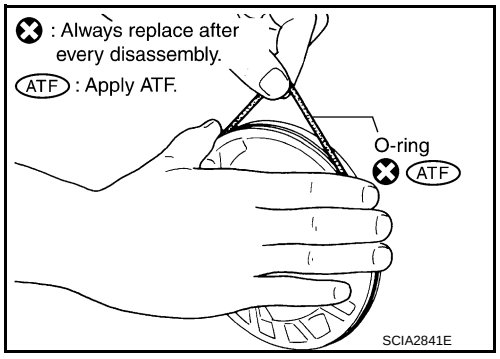

3. Using the drift, install oil pump housing oil seal to the oil pump housing until it is flush.

CAUTION:

- **Never reuse oil seal.**
- **Apply ATF to oil seal.**

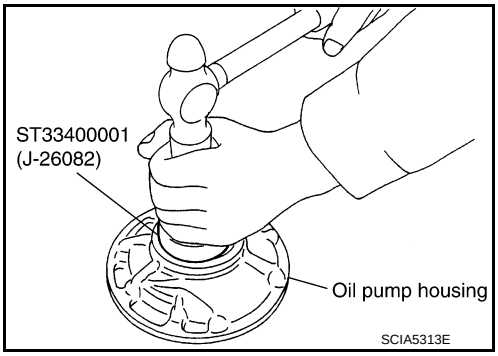

4. Install oil pump housing to oil pump cover and tighten bolts (⬅) to the specified torque in numerical order shown in the figure after temporarily tightening them.

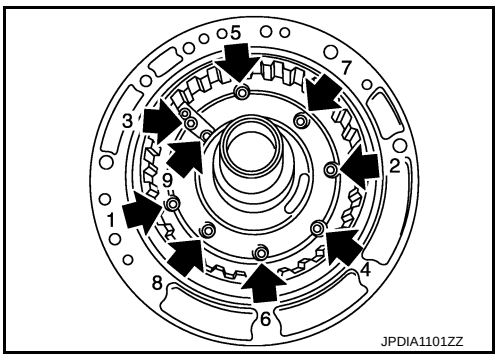

5. Install D-ring (large) (1) and D-ring (small) (2) to 2346 brake piston.

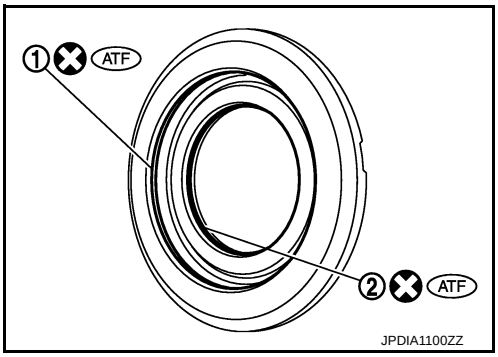

6. Install 2346 brake piston (1) to oil pump assembly.

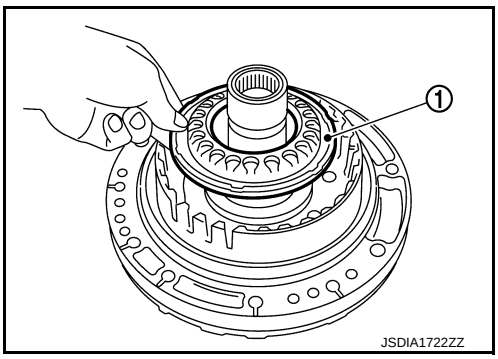

7. Install D-ring (inner) (1) and D-ring (outer) (2) to front brake piston.

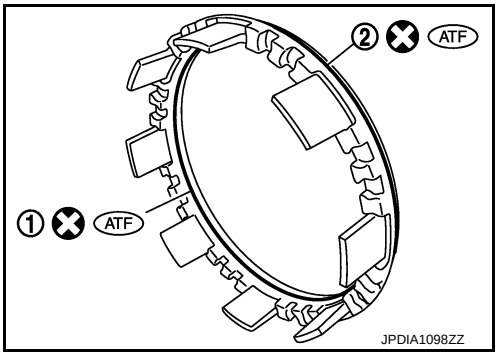

8. Install front brake piston (1) to oil pump assembly.

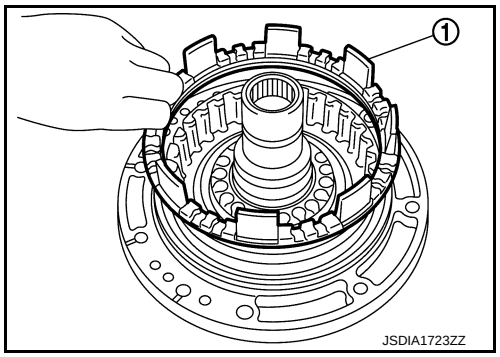

9. Install 2346 brake spring retainer (1) to oil pump assembly.

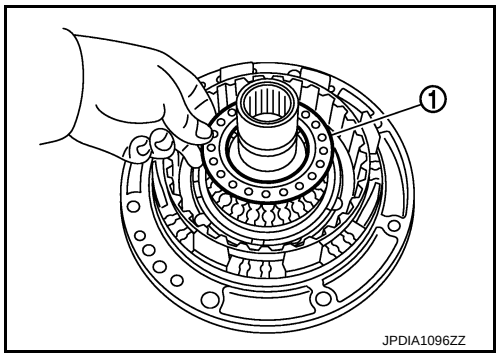

10. Set the clutch spring compressor [SST: KV31102400 (J-34285 and J-34285-87)] (A) on 2346 brake spring retainer and install snap ring (fixing 2346 brake spring retainer) (1) to oil pump assembly while compressing return spring.

B : Press

CAUTION:
Be careful not to expand snap ring excessively.

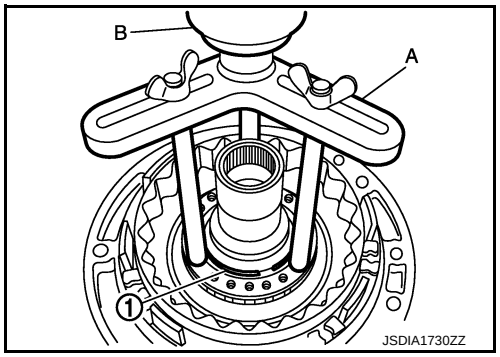

11. Install front brake spring retainer (1) to oil pump assembly.

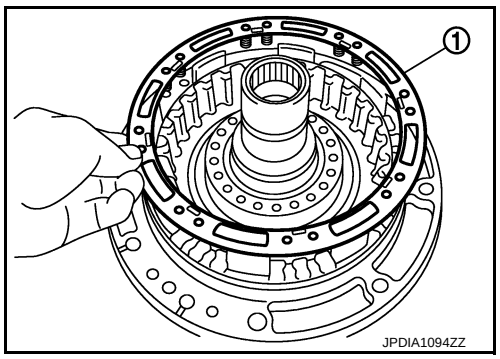

12. Set the clutch spring compressor (SST: KV31103800) (A) on front brake spring retainer and install snap ring (fixing front brake spring retainer) (1) to oil pump assembly while compressing return spring.

CAUTION:
Be careful not to expand snap ring excessively.

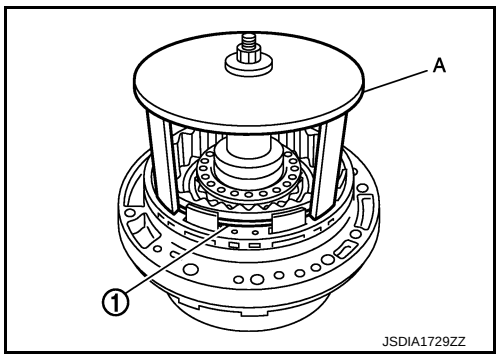

13. Install seal ring (1) to oil pump assembly.

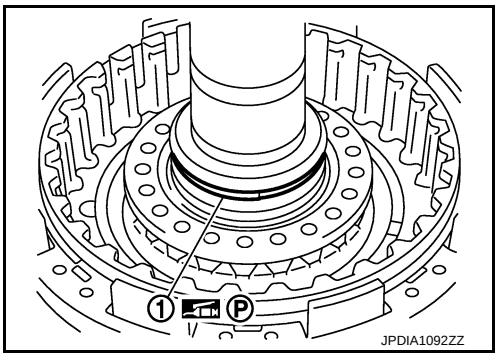

14. Install 2346 brake component part (retaining plate, drive plates, driven plates, dish plate and snap ring) to oil pump assembly.

1 : Dish plate
2 : Driven plate (four pieces)
3 : Drive plate (four pieces)
4 : Retaining plate
5 : Snap ring

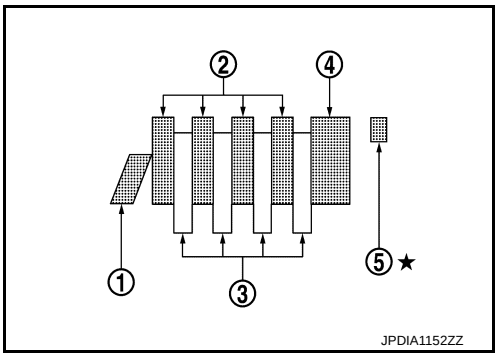

CAUTION:
- **Check the order of plates.**
- **Never install snap ring mating part (A) to the clearance groove [(B) shown in the figure] of oil pump cover.**

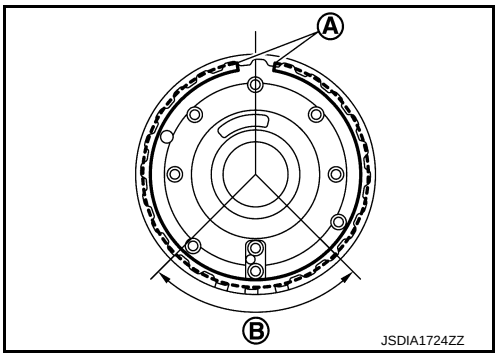

Inspection and Adjustment

INFOID:0000000006365114

INSPECTION AFTER DISASSEMBLY

Each Snap Ring
Check for deformation, fatigue or damage. If necessary, replace snap ring.

Each Spring Retainer
Check for deformation, fatigue or damage. If necessary, replace spring retainer.

2346 Brake Drive Plates
Check facing for burns, cracks or damage. If necessary, replace drive plates and driven plates.

2346 Brake Retaining Plate, Driven Plates and Dish Plate
Check facing for burns, cracks or damage. If necessary, replace retaining plate and dish plate.

INSPECTION AFTER ASSEMBLY

2346 Brake Clearance

Set a dial indicator (A) as shown in the figure. Blow air into 2346 brake oil pressure hole (B), and measure 2346 brake clearance. If clearance is outside the specified value, adjust clearance by selecting an appropriate snap ring (1). Refer to TM-331, "Oil Channel".

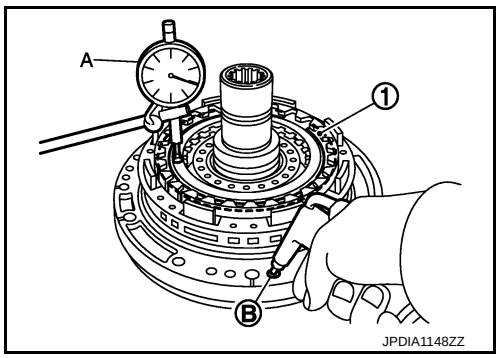

Air pressure	**: 300 kPa (3.06 kg/cm^2, 43.5 psi)**
2346 brake clearance	**: Refer to TM-409, "2346 Brake Clearance".**

CAUTION:
Never exceed the specified air pressure value.

UNDER DRIVE CARRIER, FRONT BRAKE HUB

Exploded View

INFOID:0000000006365115

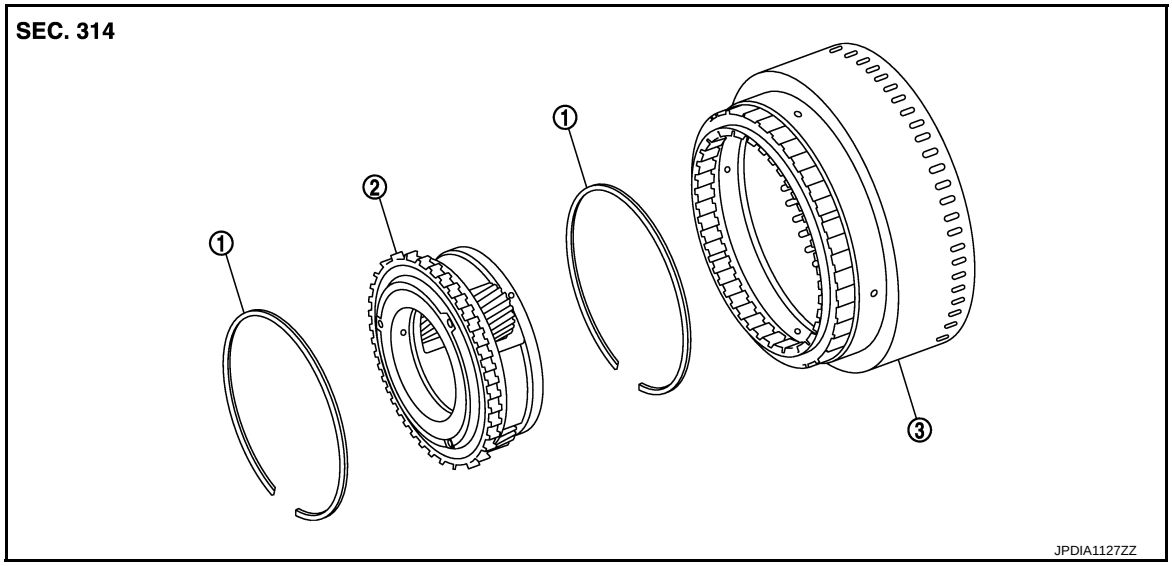

1. Snap ring
2. Under drive carrier assembly
3. Front brake hub

Refer to GI-4, "Components" for symbols in the figure.

Disassembly

INFOID:0000000006365116

1. Remove snap ring (1) from front brake hub using a flat-bladed screwdriver.
   CAUTION:
   - **Be careful not to scratch front brake hub and under drive carrier assembly.**
   - **Be careful not to damage snap ring.**

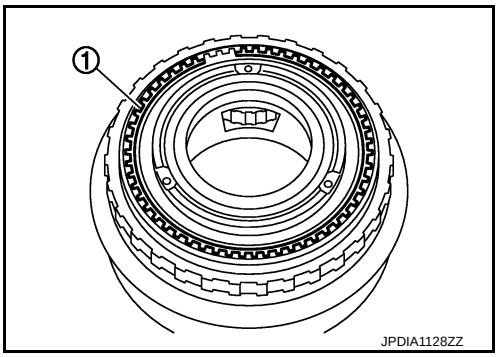

2. Remove under drive carrier assembly (1) from front brake hub.

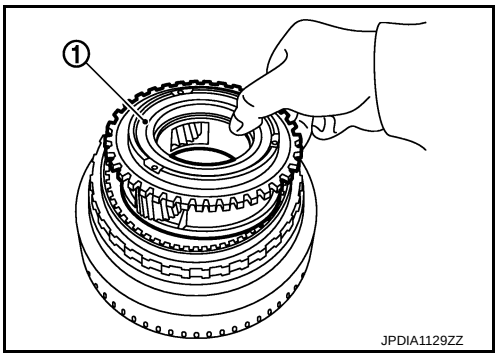

3. Remove snap ring (1) from front brake hub using a flat-bladed screwdriver.
CAUTION:
- **Be careful not to scratch front brake hub.**
- **Be careful not to damage snap ring.**

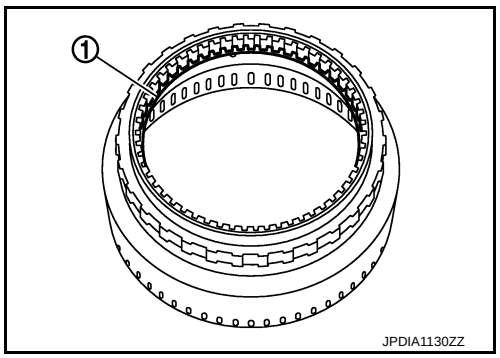

Assembly

INFOID:0000000006365117

1. Install snap ring (1) to front brake hub.
CAUTION:
Be careful not to damage snap ring.

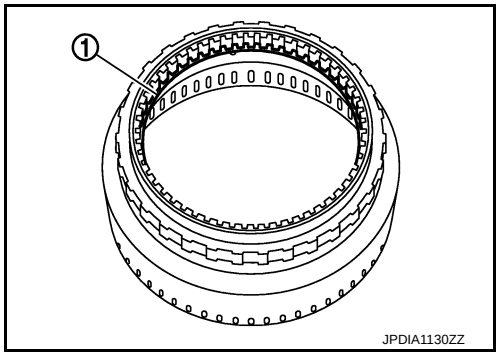

2. Install under drive carrier assembly (1) to front brake hub.

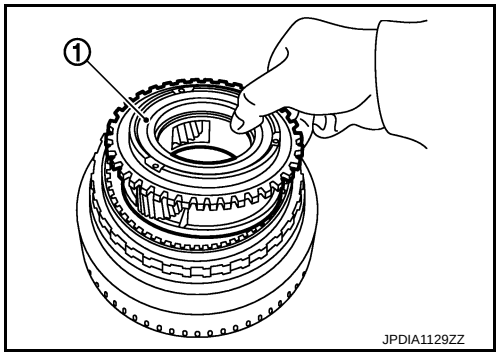

3. Install snap ring (1) to front brake hub using a flat-bladed screwdriver.
CAUTION:
- **Be careful not to scratch front brake hub.**
- **Be careful not to damage snap ring.**

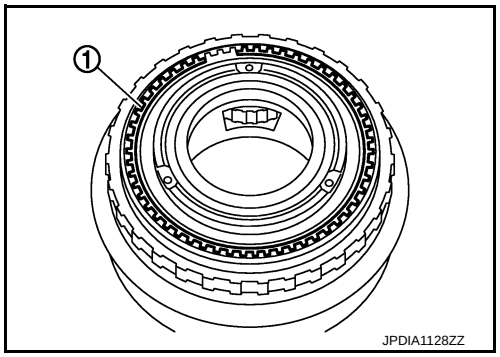

Inspection

INFOID:0000000006365118

INSPECTION AFTER REMOVAL
- Each Snap Ring
  Check for deformation, fatigue or damage. If necessary, replace snap ring.
- Under Drive Carrier Assembly
  Check for deformation, fatigue or damage. If necessary, replace under drive carrier assembly.
- Front Brake Hub

Check for deformation, fatigue or damage. If necessary, replace front brake hub.

FRONT CARRIER, INPUT CLUTCH, REAR INTERNAL GEAR

Exploded View

INFOID:0000000006365119

TYPE 1

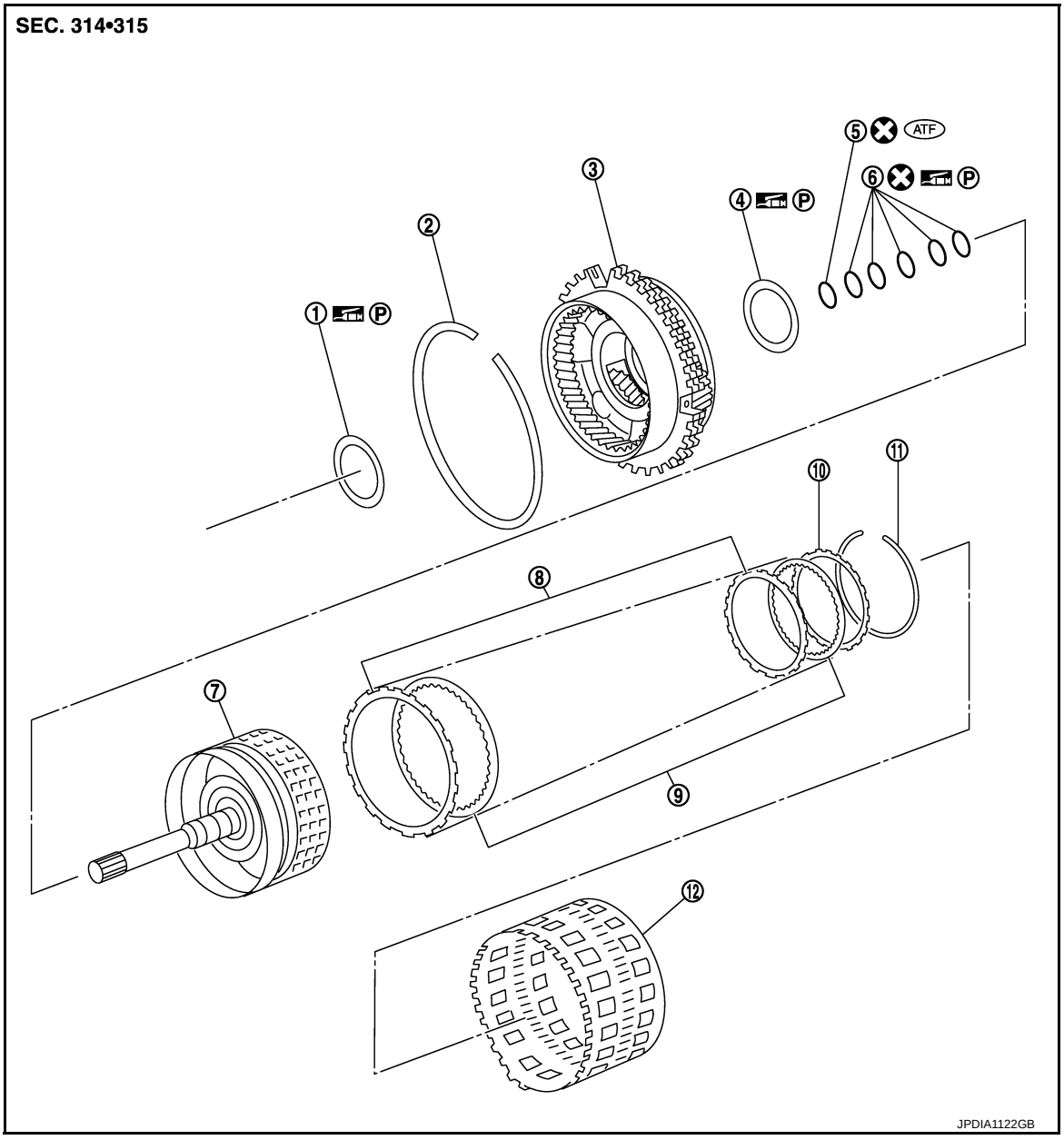

1.	Needle bearing	2.	Snap ring	3.	Front carrier assembly
4.	Needle bearing	5.	O-ring	6.	Seal ring
7.	Input clutch drum	8.	Input clutch driven plate	9.	Input clutch drive plate
10.	Input clutch retaining plate	11.	Snap ring	12.	Rear internal gear

Refer to GI-4, "Components" for symbols in the figure.

TYPE 2

SEC. 314•315

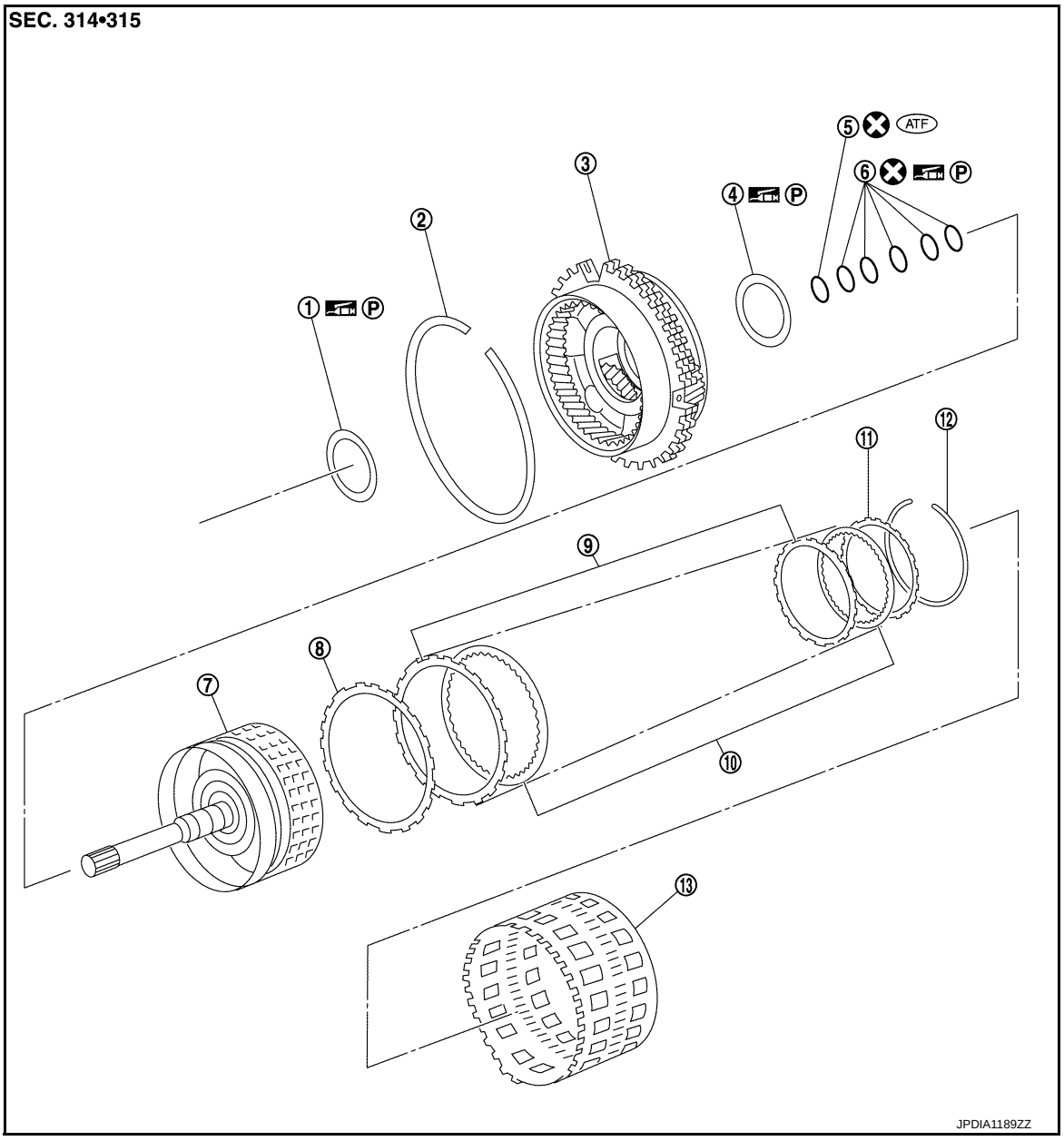

1.	Needle bearing	2.	Snap ring	3.	Front carrier assembly
4.	Needle bearing	5.	O-ring	6.	Seal ring
7.	Input clutch drum	8.	Input clutch dish plate	9.	Input clutch driven plate
10.	Input clutch drive plate	11.	Input clutch retaining plate	12.	Snap ring
13.	Rear internal gear				

Refer to GI-4, "Components" for symbols in the figure.

Disassembly

INFOID:0000000006365120

1. Remove needle bearing (1) from front carrier assembly.

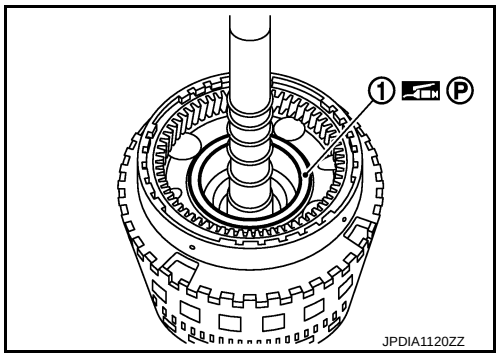

2. Compress snap ring (1) using flat-bladed screwdrivers (A).
CAUTION:
- **Be careful not to scratch rear internal gear.**
- **Be careful not to damage snap ring.**
3. Remove front carrier assembly and input clutch assembly from rear internal gear.
4. Remove front carrier assembly from input clutch assembly.

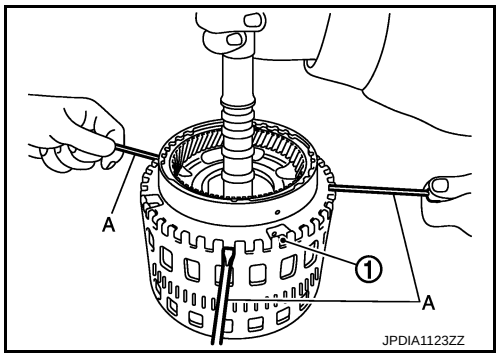

6. Remove snap ring (1) from front carrier assembly.
CAUTION:
Be careful not to expand snap ring excessively.

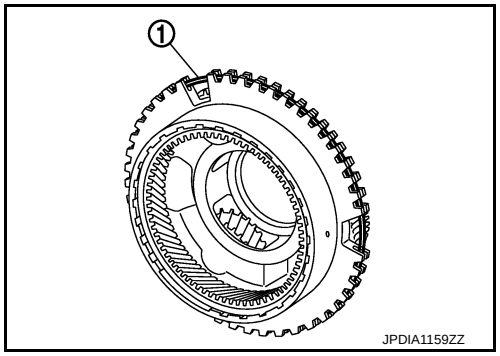

7. Remove O-ring (1) and seal rings (2) from input clutch assembly.

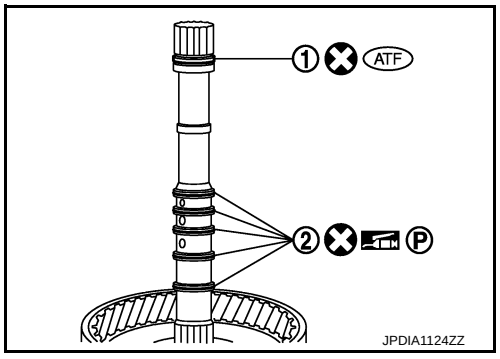

8. Remove needle bearing from input clutch assembly.

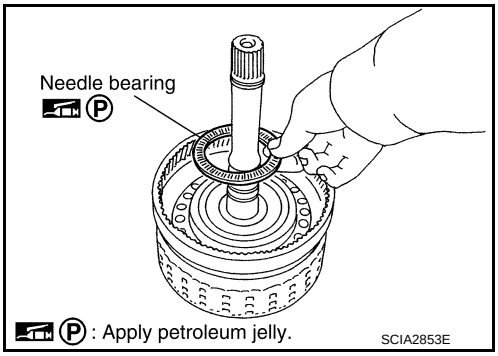

9. Remove snap ring from input clutch drum using a flat-bladed screwdriver.
CAUTION:
- **Be careful not to scratch rear input clutch drum and input clutch retaining plate.**
- **Be careful not to damage snap ring.**

10. Remove input clutch component part (drive plates, driven plates, retaining plate and dish plate*) from input clutch drum.
*: Type 2 only

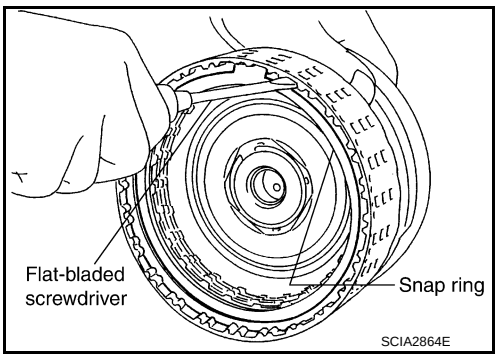

Assembly

INFOID:0000000006365121

1. Install input clutch component part (drive plates, driven plates and retaining plate) to input clutch drum. (Type 1)

1 : Snap ring
2 : Retaining plate
3 : Drive plate (six pieces)
4 : Driven plate (six pieces)

CAUTION:
Check order of plates.

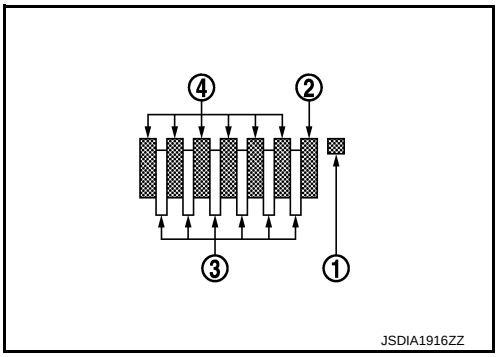

2. Install input clutch component part (drive plates, driven plates, retaining plate and dish plate) to input clutch drum. (Type 2)

1 : Snap ring
2 : Retaining plate
3 : Drive plate (six pieces)
4 : Driven plate (six pieces)
5 : Dish plate

CAUTION:
Check order of plates.

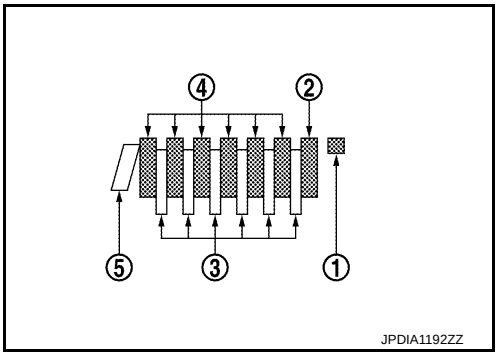

3. Install snap ring to input clutch drum using a flat-bladed screwdriver.
CAUTION:
- **Be careful not to scratch input clutch drum and input clutch retaining plate.**
- **Be careful not to damage snap ring.**

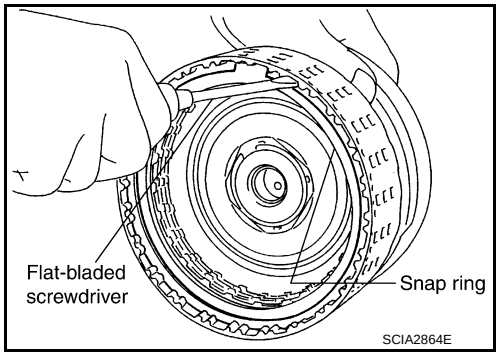

4. Install needle bearing to input clutch assembly.
CAUTION:
Check the direction of needle bearing. Refer to TM-331, "Location of Needle Bearings and Bearing Races".

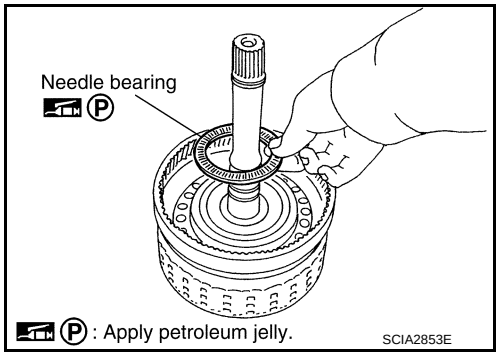

5. Install O-ring (1) and seal rings (2) to input clutch assembly.

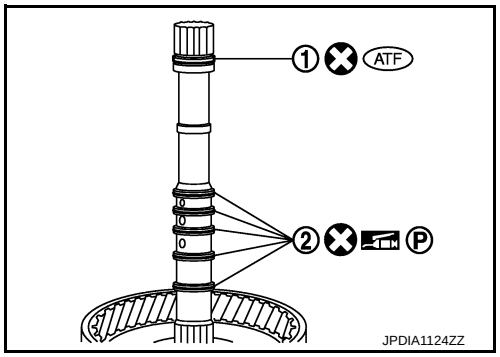

6. Install snap ring (1) to front carrier assembly.
CAUTION:
Be careful not to expand snap ring excessively.

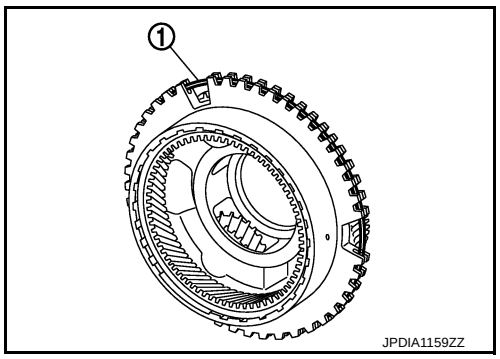

7. Compress snap ring (1) using flat-bladed screwdrivers (A).
CAUTION:
- **Be careful not to scratch rear internal gear.**
- **Be careful not to damage snap ring.**
8. Install front carrier assembly and input clutch assembly to rear internal gear.

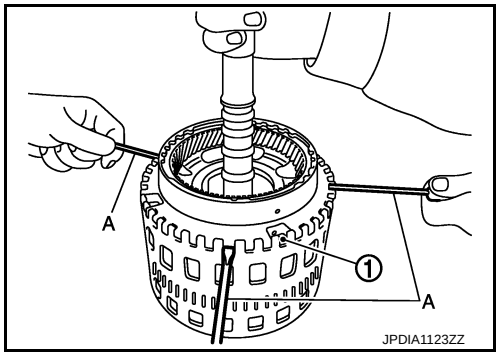

9. Install needle bearing (1) to front carrier assembly.
CAUTION:
Check the direction of needle bearing. Refer to TM-331, "Location of Needle Bearings and Bearing Races".

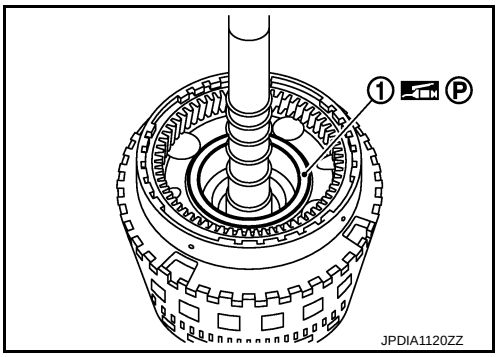

Inspection

INFOID:0000000006365122

INSPECTION AFTER DISASSEMBLY

Front Carrier Snap Ring
Check for deformation, fatigue or damage. If necessary, replace the snap ring.

Input Clutch Snap Ring
Check for deformation, fatigue or damage. If necessary, replace input clutch assembly.

Input Clutch Drum
Check for deformation, fatigue or damage or burns. If necessary, replace input clutch assembly.

Input Clutch Drive Plates
Check facing for burns, cracks or damage. If necessary, replace input clutch assembly.

Input Clutch Retaining Plate and Driven Plates
Check facing for burns, cracks or damage. If necessary, replace input clutch assembly.

Input Clutch Dish Plate (Type 2)
Check facing for burns, cracks or damage. If necessary, replace input clutch assembly.

Front Carrier
Check for deformation, fatigue or damage. If necessary, replace front carrier assembly.

Rear Internal Gear
Check for deformation, fatigue or damage. If necessary, replace rear internal gear.

MID SUN GEAR, REAR SUN GEAR, HIGH AND LOW REVERSE CLUTCH HUB

Exploded View

INFOID:0000000006365123

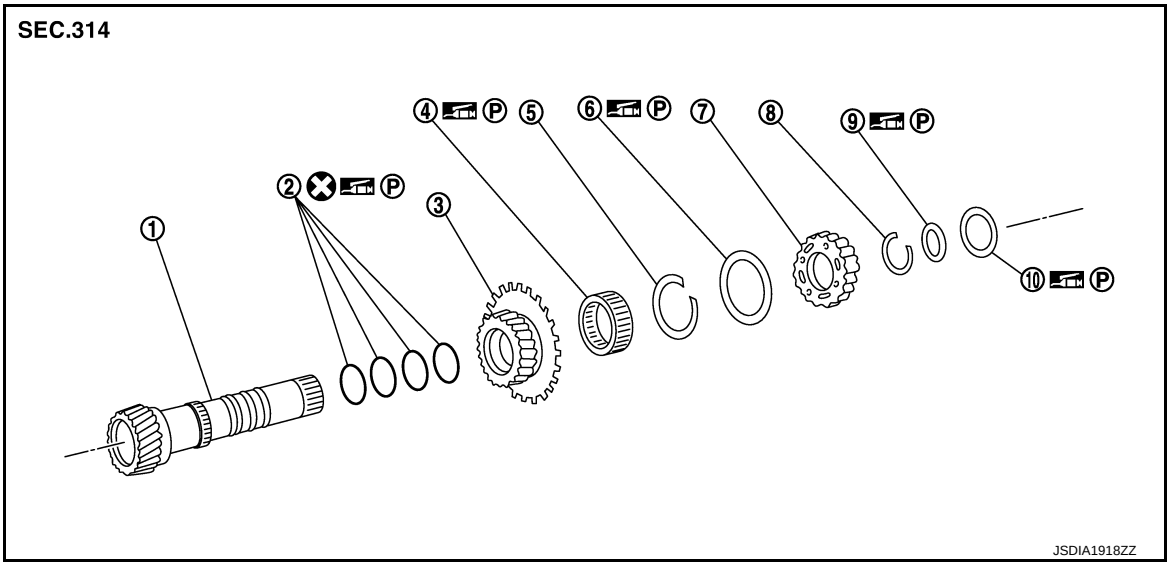

1. Mid sun gear
2. Seal ring
3. Rear sun gear
4. 2nd one-way clutch
5. Snap ring
6. Needle bearing
7. High and low reverse clutch hub
8. Snap ring
9. Bearing race
10. Needle bearing

Refer to GI-4, "Components" for symbols in the figure.

Disassembly

INFOID:0000000006365124

1. Remove needle bearing and bearing race from high and low reverse clutch hub.

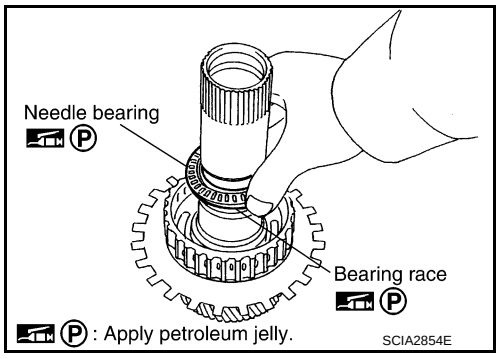

2. Remove snap ring from mid sun gear assembly using pair of snap ring pliers.
CAUTION:
Be careful not to expand snap ring excessively.

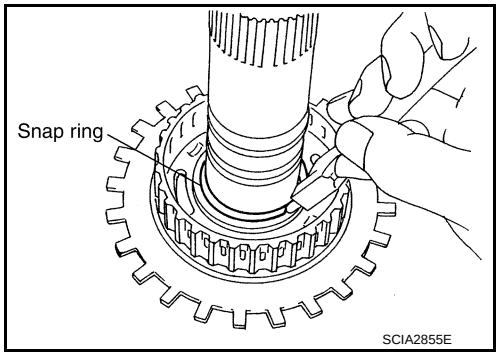

3. Remove high and low reverse clutch hub from mid sun gear assembly.

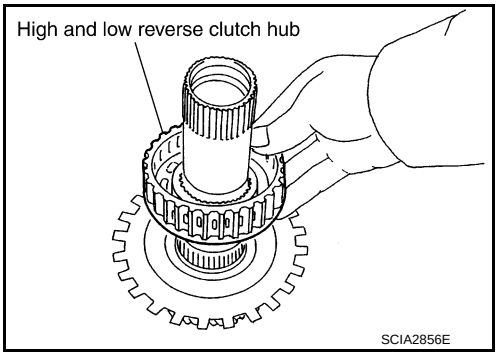

4. Remove needle bearing from high and low reverse clutch hub.

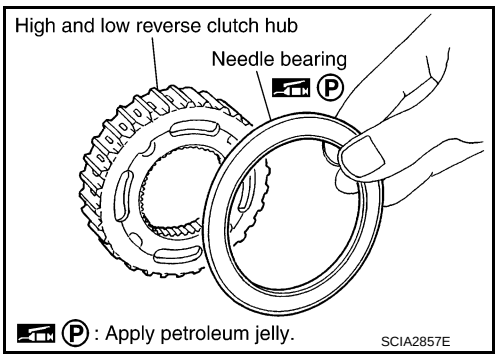

5. Remove rear sun gear assembly from mid sun gear assembly.

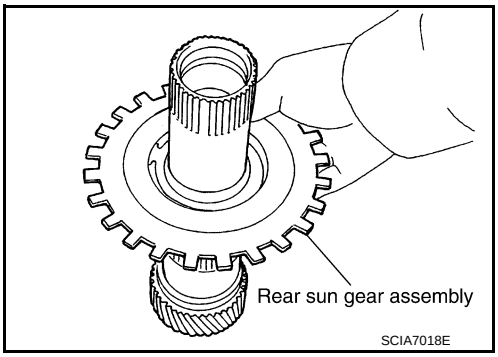

6. Remove snap ring from rear sun gear using a flat-bladed screwdriver.

CAUTION:

- **Be careful not to scratch rear sun gear and 2nd one-way clutch.**
- **Be careful not to damage snap ring.**

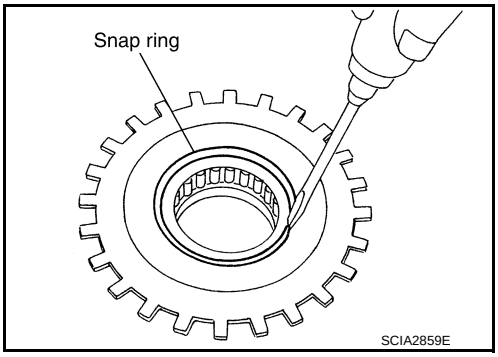

7. Remove 2nd one-way clutch from rear sun gear.

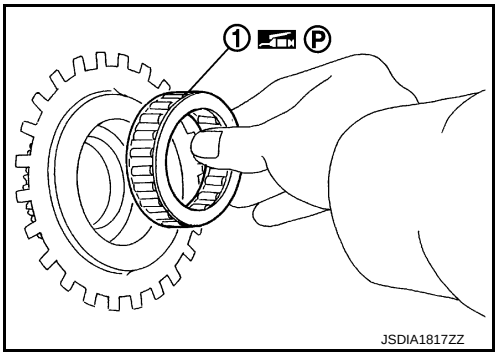

8. Remove seal rings from mid sun gear.

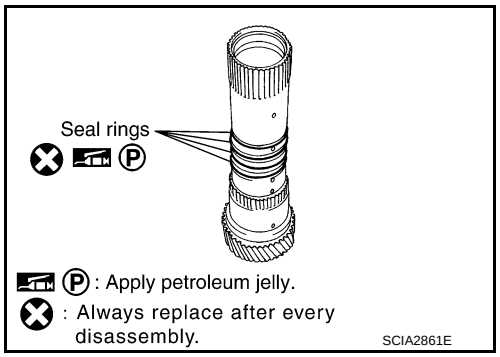

Assembly

INFOID:0000000006365125

1. Install seal rings to mid sun gear.

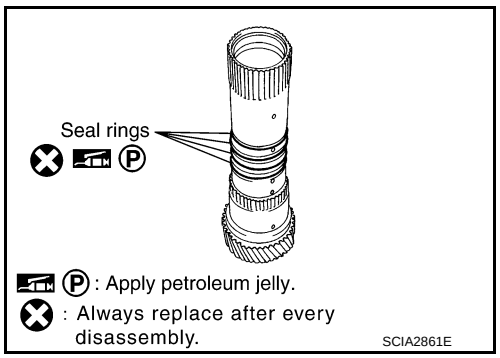

2. Install 2nd one-way clutch to rear sun gear.

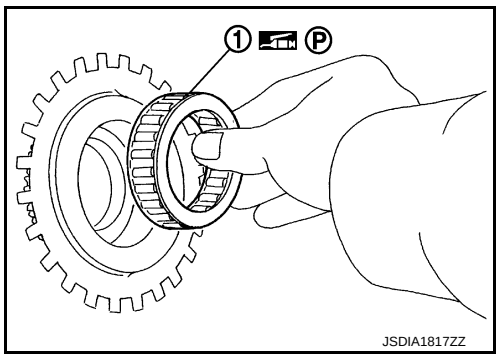

3. Install snap ring to rear sun gear using a flat-bladed screwdriver.
CAUTION:
- **Be careful not to scratch rear sun gear and 2nd one-way clutch.**
- **Be careful not to damage snap ring.**

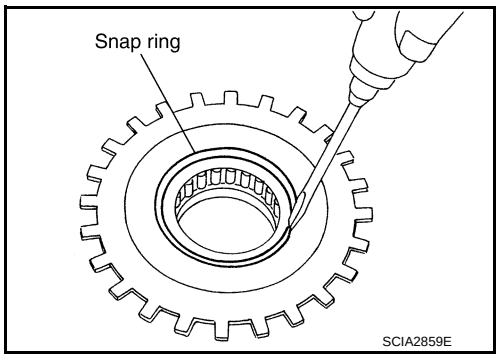

4. Install rear sun gear assembly to mid sun gear assembly.

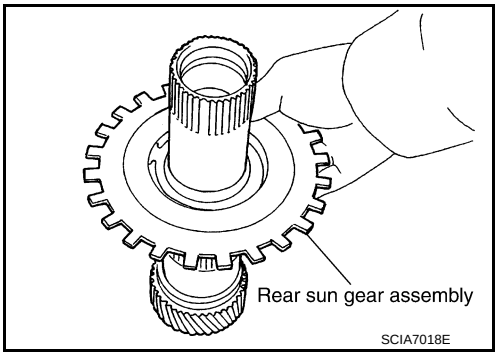

5. Install needle bearing to high and low reverse clutch hub.
CAUTION:
Check the direction of needle bearing. Refer to TM-331, "Location of Needle Bearings and Bearing Races".

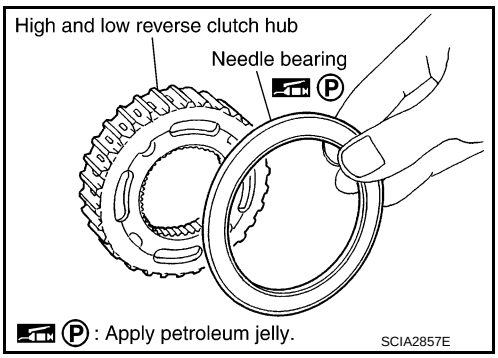

6. Install high and low reverse clutch hub to mid sun gear assembly.

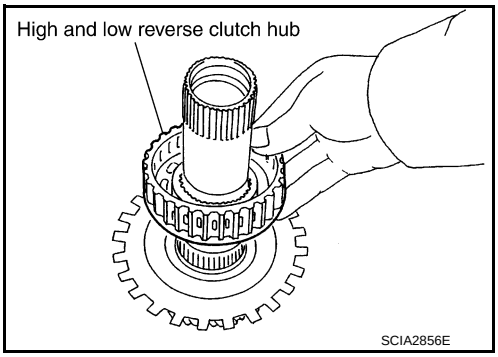

7. Install snap ring to mid sun gear assembly using pair of snap ring pliers.
CAUTION:
Be careful not to expand snap ring excessively.

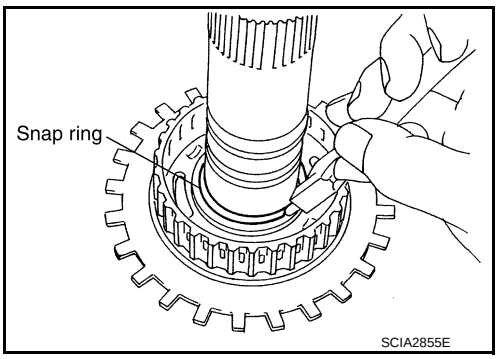

8. Check operation of 2nd one-way clutch.

a. Hold mid sun gear and turn rear sun gear.
b. Check 2nd one-way clutch for correct locking and unlocking directions.
CAUTION:
If not as shown in the figure, check installation direction of 2nd one-way clutch.

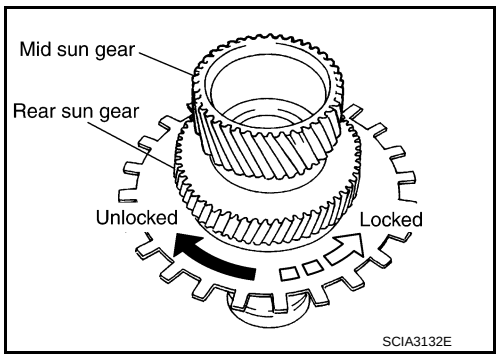

9. Install needle bearing and bearing race to high and low reverse clutch hub.
CAUTION:
Check the direction of needle bearing. Refer to TM-331, "Location of Needle Bearings and Bearing Races".

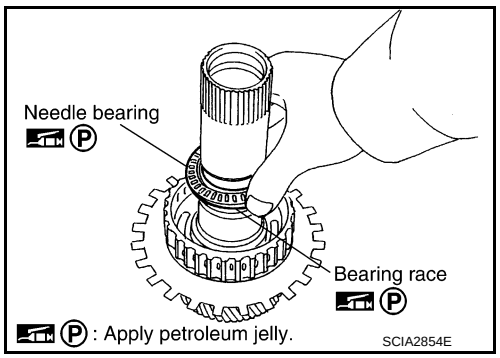

Inspection

INFOID:0000000006365126

INSPECTION AFTER REMOVAL

2nd One-way Clutch

1. Hold mid sun gear and turn rear sun gear.
2. Check 2nd one-way clutch for correct locking and unlocking directions. If necessary, replace 2nd one-way clutch.

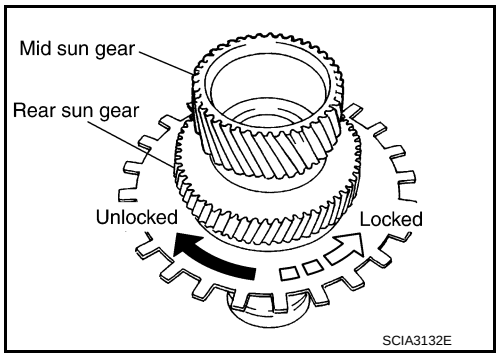

High and Low Reverse Clutch Hub Snap Ring, Rear Sun Gear Snap Ring
Check for deformation, fatigue or damage. If necessary, replace the snap ring.

2nd One-way Clutch
Check frictional surface for wear or damage. If necessary, replace the 2nd one-way clutch.

Mid Sun Gear
Check for deformation, fatigue or damage. If necessary, replace the mid sun gear.

Rear Sun Gear
Check for deformation, fatigue or damage. If necessary, replace the rear sun gear.

High and Low Reverse Clutch Hub
Check for deformation, fatigue or damage. If necessary, replace the high and low reverse clutch hub.

HIGH AND LOW REVERSE CLUTCH

Exploded View

INFOID:0000000006365127

TYPE 1

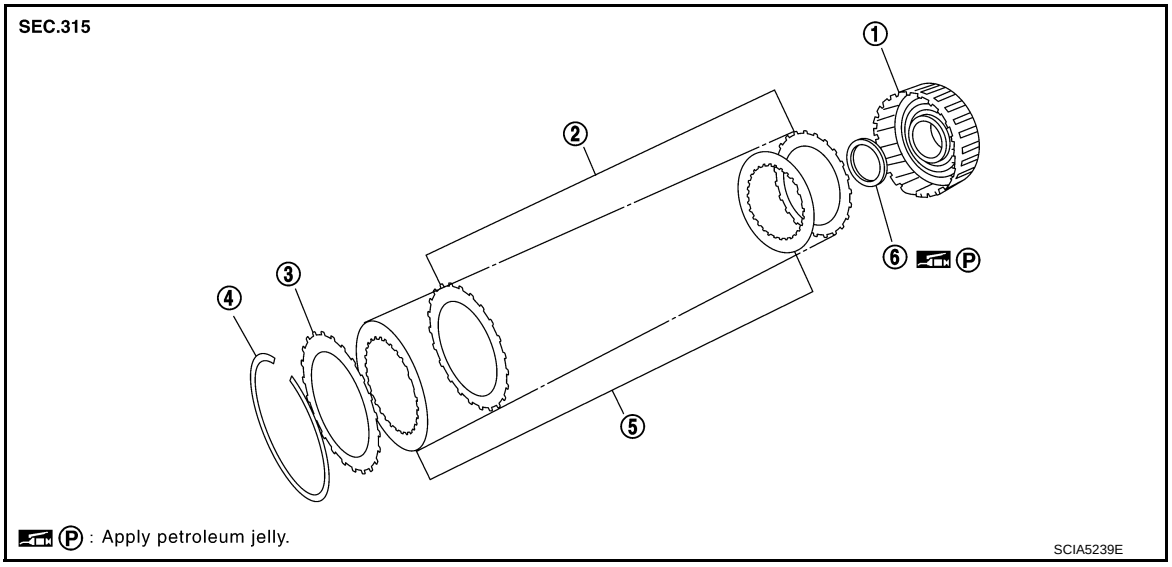

1. High and low reverse clutch drum
2. High and low reverse clutch driven plate
3. High and low reverse clutch retaining plate
4. Snap ring
5. High and low reverse clutch drive plate
6. Bearing race

TYPE 2

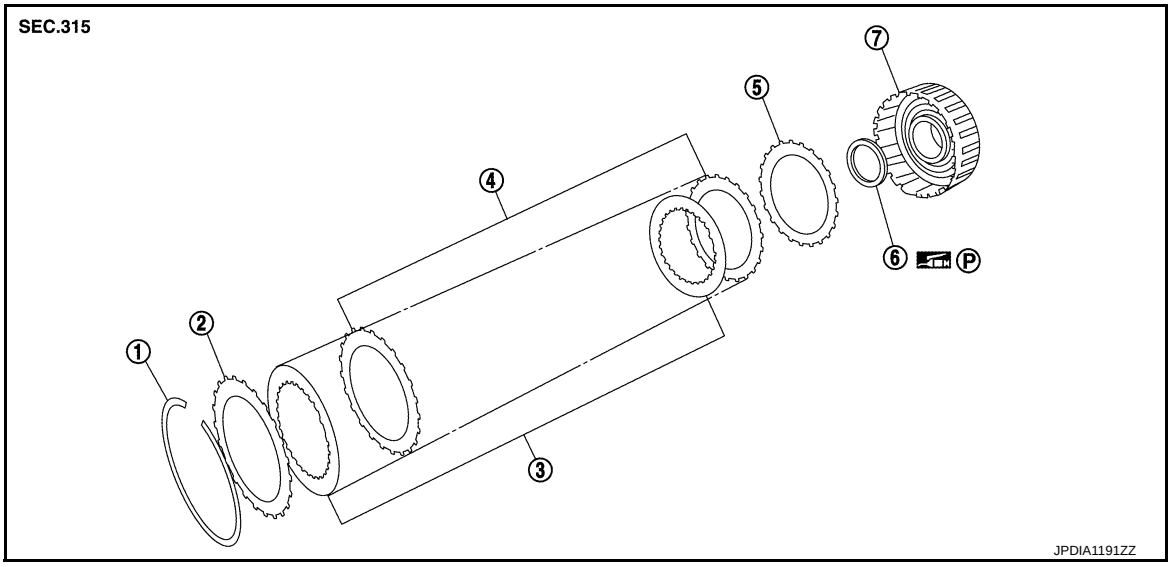

1. Snap ring
2. High and low reverse clutch retaining plate
3. High and low reverse clutch drive plate
4. High and low reverse clutch driven plate
5. High and low reverse clutch dish plate
6. Bearing race
7. High and low reverse clutch drum

Refer to GI-4, "Components" for the symbols in the figure.

Disassembly

INFOID:0000000006365128

1. Remove bearing race from high and low reverse clutch drum.

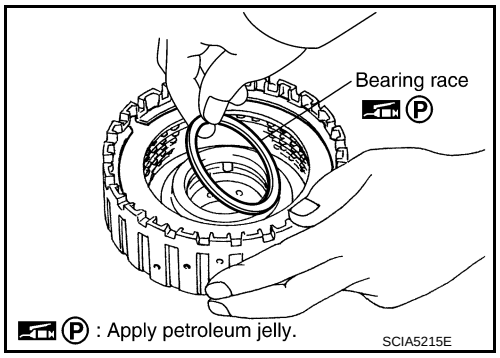

2. Remove snap ring from high and low reverse clutch drum using a flat-bladed screwdriver.
   CAUTION:
   - **Be careful not to scratch high and low reverse clutch drum.**
   - **Be careful not to damage snap ring.**
3. Remove high and low reverse clutch component part (drive plates, driven plates, retaining plate and dish plate*) from high and low reverse clutch drum.
   *: Type 2 only

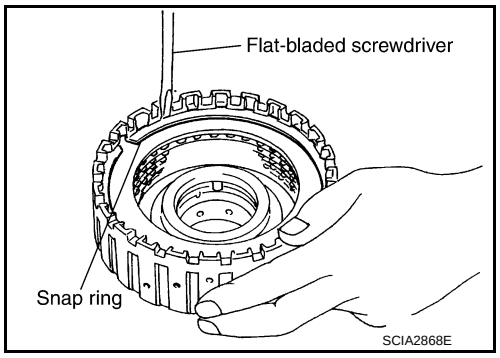

Assembly

INFOID:0000000006365129

1. Install high and low reverse clutch component part (drive plates, driven plates and retaining plate) to high and low reverse clutch drum. (Type 1)

   1 : Snap ring
   2 : Retaining plate
   3 : Drive plate (four pieces)
   4 : Driven plate (four pieces)

   CAUTION:
   Check the order of plates.

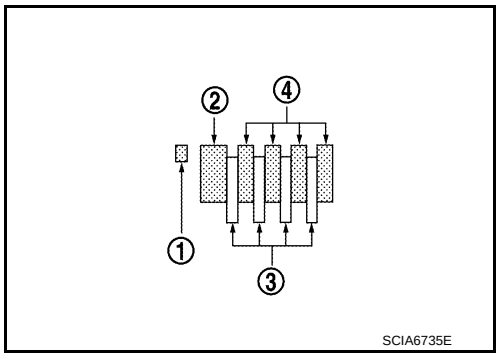

2. Install high and low reverse clutch component part (dish plate, drive plates, driven plates and retaining plate) to high and low reverse clutch drum. (Type 2)

   1 : Snap ring
   2 : Retaining plate
   3 : Drive plate (four pieces)
   4 : Driven plate (four pieces)
   5 : Dish plate

   CAUTION:
   Check the order of plates.

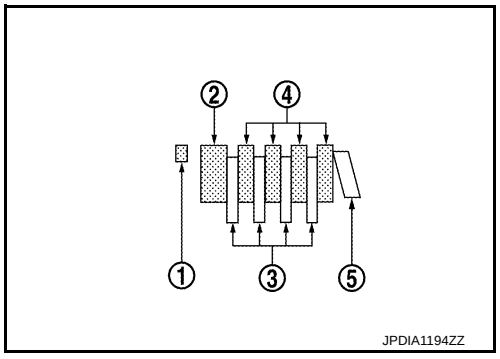

3. Install snap ring to high and low reverse clutch drum using a flat-bladed screwdriver.
   CAUTION:
   - **Be careful not to scratch high and low reverse clutch drum.**
   - **Be careful not to damage snap ring.**

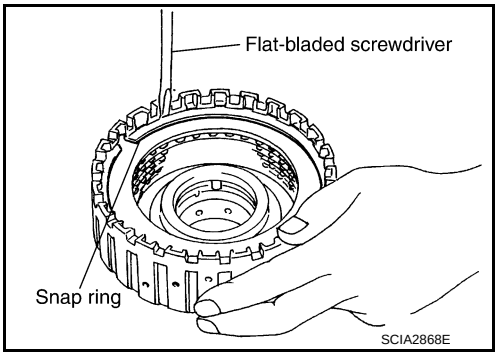

4. Install bearing race to high and low reverse clutch drum.
   CAUTION:
   Check the direction of needle bearing. Refer to TM-331, "Location of Needle Bearings and Bearing Races".

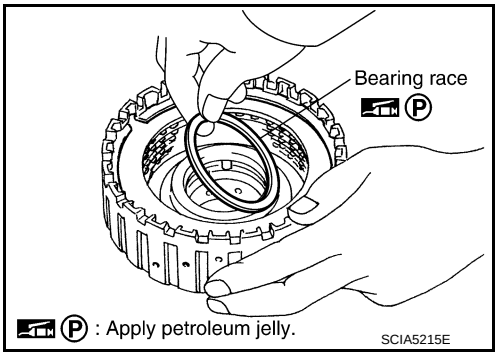

Inspection

INFOID:0000000006365130

INSPECTION AFTER DISASSEMBLY

Check the following items. If necessary, replace high and low reverse clutch assembly.

High and Low Reverse Clutch Snap Ring
Check for deformation, fatigue or damage.

High and Low Reverse Clutch Drive Plates
Check facing for burns, cracks or damage.

High and Low Reverse Clutch Retaining Plate and Driven Plates
Check facing for burns, cracks or damage.

High and Low Reverse Clutch Dish Plate (Type 2)
Check facing for burns, cracks or damage.

High and Low Reverse Clutch Drum
Check for deformation, fatigue or damage or burns.

DIRECT CLUTCH

Exploded View

INFOID:0000000006365131

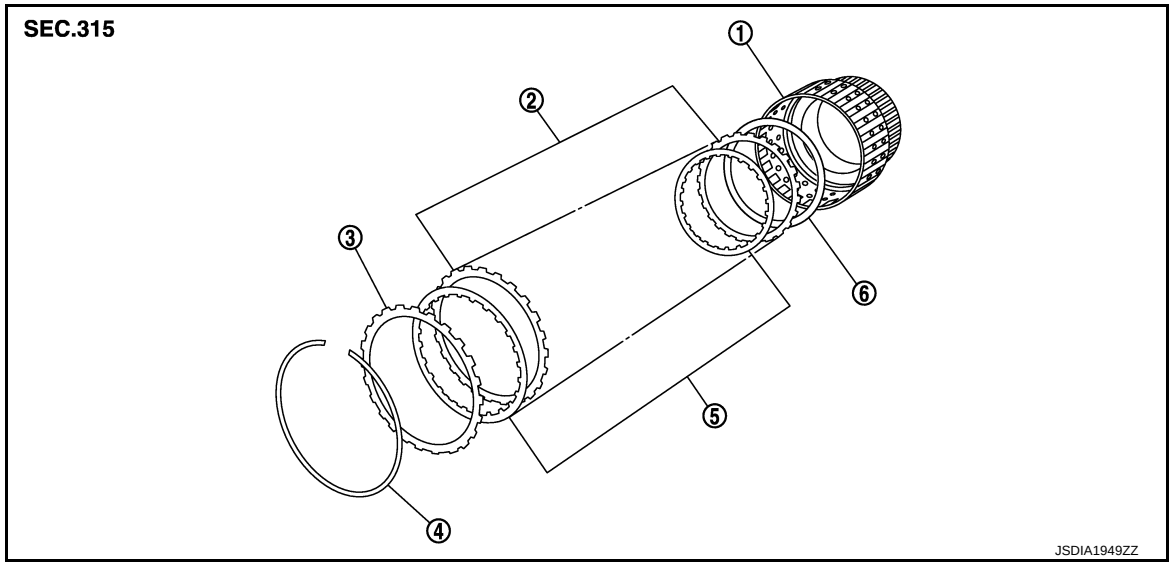

1. Direct clutch drum
2. Direct clutch driven plate
3. Direct clutch retaining plate
4. Snap ring
5. Direct clutch drive plate
6. Direct clutch dish plate

Disassembly

INFOID:0000000006365132

1. Remove snap rings from direct clutch drum using a flat-bladed screwdriver.
   CAUTION:
   - **Be careful not to scratch direct clutch drum and direct clutch retaining plate.**
   - **Be careful not to damage snap ring.**
2. Remove direct clutch component part (drive plates, driven plates, retaining plate and dish plate) from direct clutch drum.

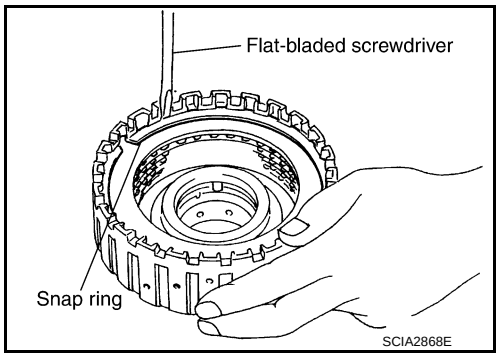

Assembly

INFOID:0000000006365133

1. Install direct clutch component part (drive plates, driven plates, retaining plate and dish plate) to direct clutch drum.

   1 : Snap ring
   2 : Retaining plate
   3 : Drive plate (five pieces)
   4 : Driven plate (five pieces)
   5 : Dish plate

   CAUTION:
   Check the order of plates.

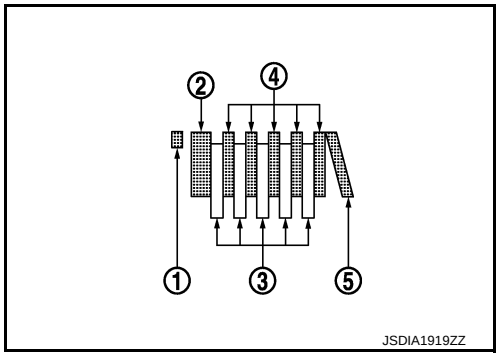

2. Install snap rings in direct clutch drum using a flat-bladed screwdriver.
   CAUTION:
   - **Be careful not to scratch direct clutch drum and direct clutch retaining plate.**
   - **Be careful not to damage snap ring.**

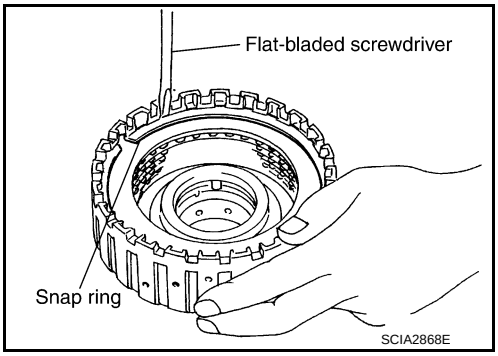

Inspection

INFOID:0000000006365134

INSPECTION AFTER DISASSEMBLY

Check the following items. If necessary, replace direct clutch assembly.

Direct Clutch Snap Ring
Check for deformation, fatigue or damage.

Direct Clutch Drive Plates
Check facing for burns, cracks or damage.

Direct Clutch Retaining Plate and Driven Plates
Check facing for burns, cracks or damage.

Direct Clutch Dish Plate
Check facing for burns, cracks or damage.

Direct Clutch Drum
Check for deformation, fatigue or damage or burns.

SERVICE DATA AND SPECIFICATIONS (SDS)

SERVICE DATA AND SPECIFICATIONS (SDS)

General Specification

INFOID:0000000006207833

Applied model		VQ25HR				VQ37VHR	
		2WD		AWD		2WD	AWD
Transmission model code number		X182C	X358A, X456C	X182D	X358B, X456D	X350E, X438C	X351A, X438D
Stall torque ratio		1.95 : 1				1.92 : 1	
Transmission gear ratio	1st	4.783				4.924	
	2nd	3.103				3.194	
	3rd	1.984				2.043	
	4th	1.371				1.412	
	5th	1.000				1.000	
	6th	0.871				0.862	
	7th	0.776				0.772	
	Reverse	3.859				3.972	
Remarks	Input clutch dish plate	Not installed	Installed	Not installed	Installed	Installed	
	High and low reverse clutch dish plate	Not installed	Installed	Not installed	Installed	Installed	
Recommended fluid		Genuine NISSAN Matic S ATF*1					
Fluid capacity		9.2 liter (9-3/4 US qt, 8-1/8 Imp qt)*2					

CAUTION:
- **Use only Genuine NISSAN Matic S ATF. Never mix with other ATF.**
- **Using ATF other than Genuine NISSAN Matic S ATF will cause deterioration driveability and A/T durability, and may damage the A/T, which is not covered by the INFINITI new vehicle limited warranty.**

- *1: Refer to MA-13, "Fluids and Lubricants".
- *2: The fluid capacity is the reference value.

Vehicle Speed at Which Gear Shifting Occurs

INFOID:0000000006207834

VQ25HR

Unit: km/h (MPH)

Gear position	Throttle position	
	Full throttle	Half throttle
$D_1 \rightarrow D_2$	52 – 56 (32 – 35)	30 – 34 (19 – 21)
$D_2 \rightarrow D_3$	81 – 89 (50 – 55)	46 – 54 (29 – 34)
$D_3 \rightarrow D_4$	127 – 137 (79 – 85)	73 – 83 (45 – 52)
$D_4 \rightarrow D_5$	186 – 196 (116 – 122)	109 – 119 (68 – 74)
$D_5 \rightarrow D_6$	251 – 261 (156 – 162)	146 – 156 (91 – 73)
$D_6 \rightarrow D_7$	251 – 261 (156 – 162)	168 – 178 (104 – 111)
$D_7 \rightarrow D_6$	240 – 250 (149 – 155)	114 – 124 (71 – 77)
$D_6 \rightarrow D_5$	240 – 250 (149 – 155)	114 – 124 (71 – 77)
$D_5 \rightarrow D_4$	176 – 186 (109 – 116)	66 – 76 (41 – 47)
$D_4 \rightarrow D_3$	116 – 126 (72 – 78)	38 – 48 (24 – 30)

D3 → D2	64 – 72 (40 – 45)	11 – 19 (7 – 12)
D2 → D1	26 – 30 (16 – 19)	6 – 10 (4 – 6)

- At half throttle, the accelerator opening is 4/8 of the full opening.

VQ37VHR

Unit: km/h (MPH)

Gear position	Throttle position	
	Full throttle	Half throttle
D1 → D2	51 – 55 (32 – 34)	42 – 46 (26 – 29)
D2 → D3	80 – 88 (50 – 55)	62 – 70 (39 – 43)
D3 → D4	126 – 136 (78 – 85)	97 – 107 (60 – 66)
D4 → D5	184 – 194 (114 – 121)	141 – 151 (88 – 94)
D5 → D6	250 – 260 (155 – 162)	179 – 189 (111 – 117)
D6 → D7	250 – 260 (155 – 162)	215 – 225 (134 – 140)
D7 → D6	240 – 250 (149 – 155)	114 – 124 (71 – 77)
D6 → D5	240 – 250 (149 – 155)	114 – 124 (71 – 77)
D5 → D4	158 – 168 (98 – 104)	69 – 79 (43 – 49)
D4 → D3	111 – 121 (69 – 75)	39 – 49 (24 – 30)
D3 → D2	53 – 61 (33 – 38)	12 – 20 (7 – 12)
D2 → D1	7 – 11 (4 – 7)	7 – 11 (4 – 7)

- At half throttle, the accelerator opening is 4/8 of the full opening.

Vehicle Speed at Which Lock-up Occurs/Releases

INFOID:0000000006207835

VQ25HR

Throttle position	Vehicle speed km/h (MPH)	
	Lock-up ON	Lock-up OFF
Closed throttle	34 – 42 (21 – 26)	34 – 42 (21 – 26)
Half throttle	34 – 42 (21 – 26)	34 – 42 (21 – 26)

- Vehicle speed with D5 position.
- At closed throttle, the accelerator opening is less than 1/8 condition. (Closed throttle position signal OFF)
- At half throttle, the accelerator opening is 4/8 of the full opening.

VQ37VHR

Throttle position	Vehicle speed km/h (MPH)	
	Lock-up ON	Lock-up OFF
Closed throttle	48 – 56 (30 – 35)	45 – 53 (28 – 33)
Half throttle	54 – 62 (34 – 39)	51 – 59 (32 – 37)

- Vehicle speed with D5 position.
- At closed throttle, the accelerator opening is less than 1/8 condition. (Closed throttle position signal OFF)
- At half throttle, the accelerator opening is 4/8 of the full opening.

Stall Speed

INFOID:0000000006207836

Engine models	VQ25HR	VQ37VHR
Stall speed	2,232 – 2,532 rpm	2,475 – 2,775 rpm

Torque Converter

INFOID:0000000006207837

Dimension between end of converter housing and torque converter	25.0 mm (0.98 in)

Total End Play

INFOID:0000000006412697

Unit: mm (in)

Total end play	Standard	0.25 – 0.55 (0.0098 – 0.0217)
Thickness of bearing race for adjusting total end play		1.0 (0.039) 1.2 (0.047) 1.4 (0.055) 1.6 (0.063) 1.8 (0.071) 2.0 (0.079) 2.2 (0.087)

Reverse Brake Clearance

INFOID:0000000006412698

Unit: mm (in)

Reverse brake clearance	Standard	0.8 – 1.2 (0.031 – 0.047)
Thickness of retaining plate for adjusting reverse brake clearance		4.8 (0.189) 5.0 (0.197) 5.2 (0.205) 5.4 (0.213) 5.6 (0.220) 5.8 (0.228) 6.0 (0.236)

Front Brake Clearance

INFOID:0000000006412699

Unit: mm (in)

Front brake clearance	Standard	0.7 – 1.1 (0.028 – 0.043)
Thickness of retaining plate for adjusting front brake clearance		2.0 (0.079) 2.2 (0.087) 2.4 (0.094) 2.6 (0.102) 2.8 (0.110)

2346 Brake Clearance

INFOID:0000000006412700

Unit: mm (in)

2346 brake clearance	Standard	1.5 – 1.9 (0.059 – 0.075)
Thickness of snap ring for adjusting 2346 brake clearance		2.0 (0.079) 2.2 (0.087) 2.4 (0.094) 2.6 (0.102) 2.8 (0.110) 3.0 (0.118)